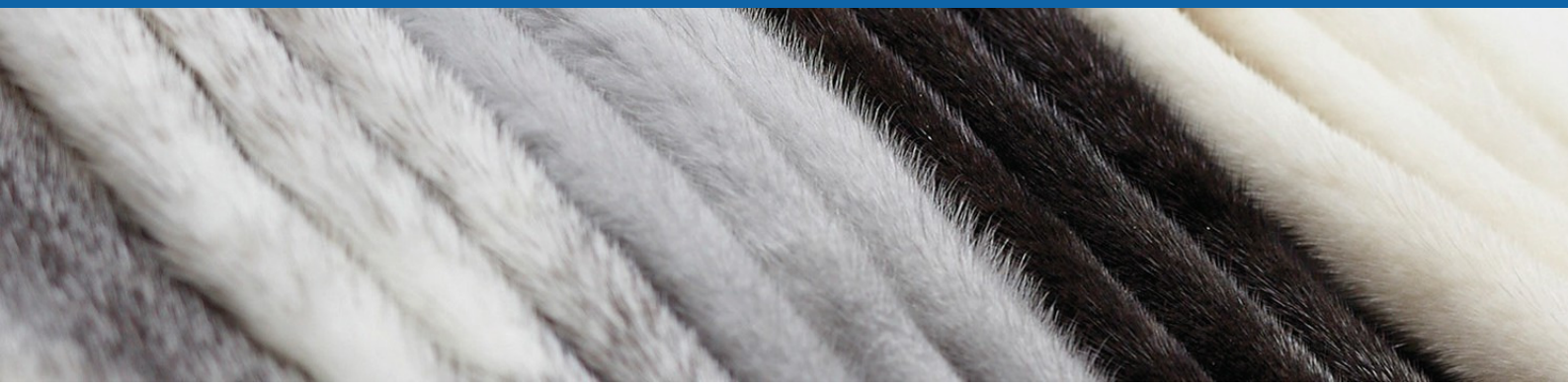

SPARE PARTS

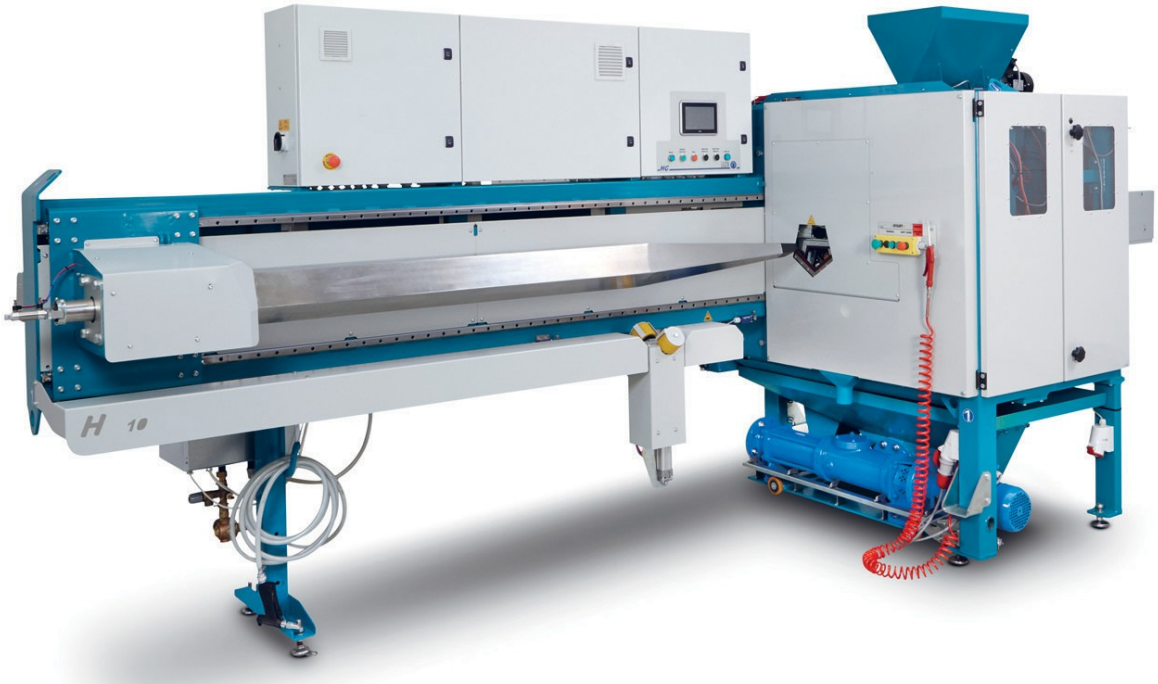

HG 10 HOT SPRAY SCRAPING MACHINE

Model 2017

IMPROVING YOUR FUR BUSINESS

Rev. 09-02-2017

1. Table of content

1. Table of content
2. Spare parts
3. Electric diagram
4. Air diagram

PARTS LIST			
ITEM	QTY	PART NUMBER	DESCRIPTION
1	1	M101978	HG 10 Hot Spray
2	1	M101921	Mono Pump assembly 2, HG10

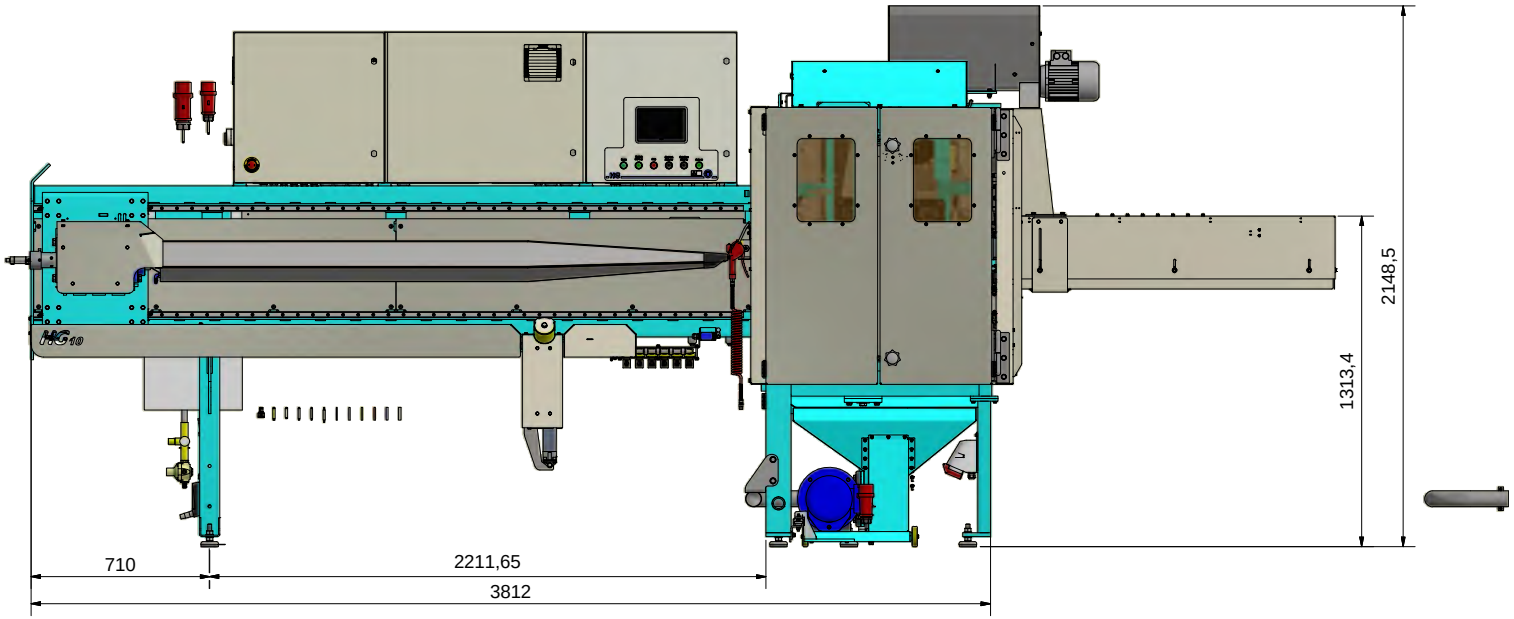

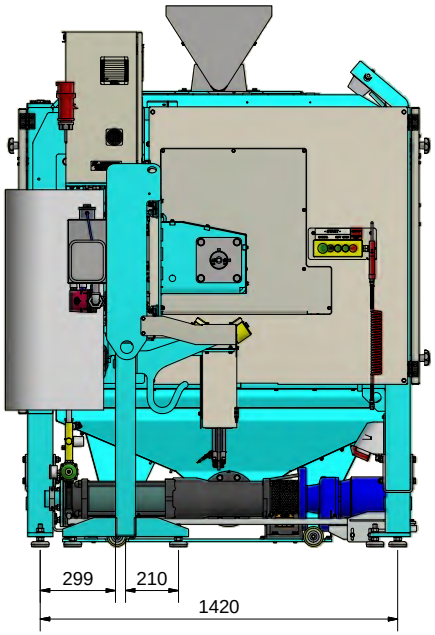

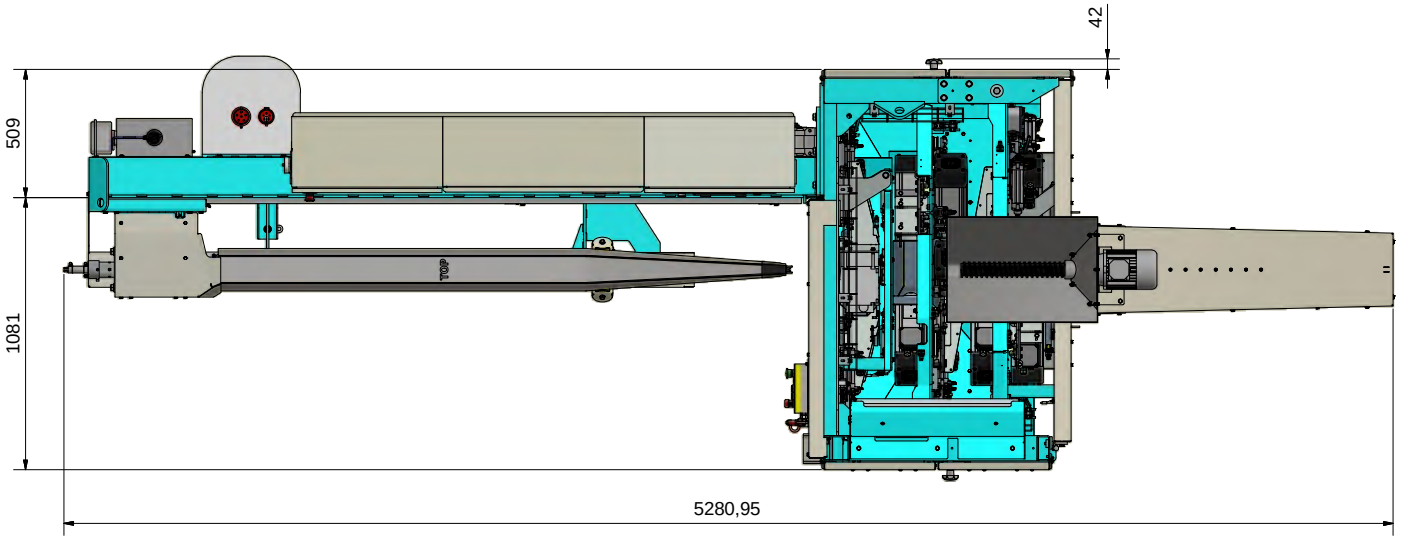

Break all edges

Revision:	Approved	Date:	Revision Description
1	MBO	24-02-2016	Made

This drawing is the property of HEDENSTED GRUPPEN A/S. Reproduction prohibited without written permission.

HEDENSTED GRUPPEN A/S

Scale: 1:15	Not specificed tolerance according to: DS/ISO 2768-m	Sheet size: A2
	Surface properties: No	Sheet: 1 /1
Part No.: 194040	Material:	
Description 1: HG 10 Hot Spray incl. monopump		
Description 2:		

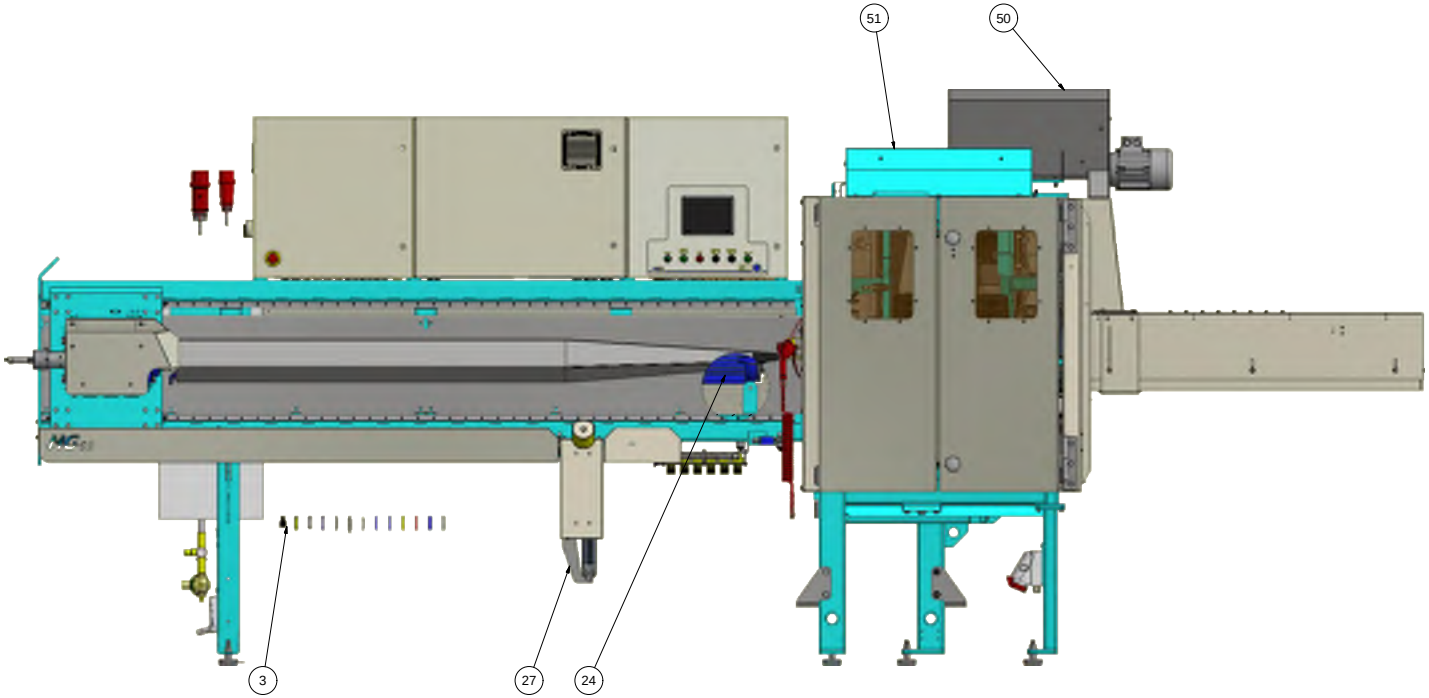

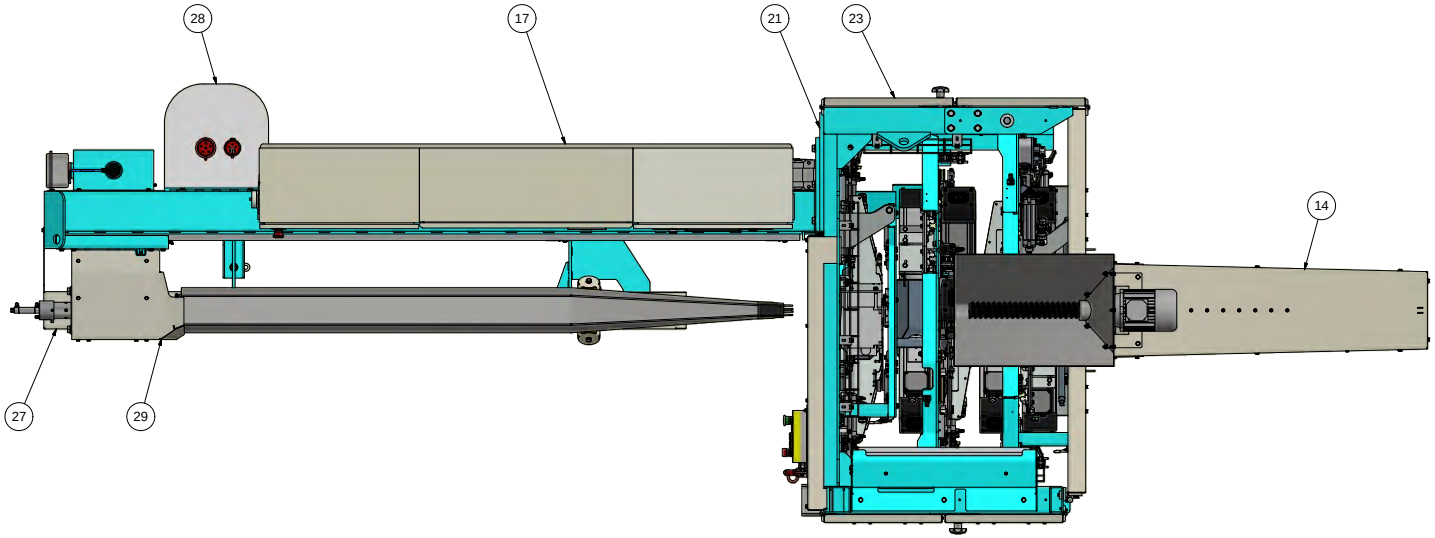

PARTS LIST

ITEM	QTY	PART NUMBER	DESCRIPTION
1	1	10203020	Hexagon cylinder head M3x20 FZB
2	25,0 m	197513	Cable JZ 3x1,5mm| PVC
3	22	215860	Y-connector 2xÏ 6 x Ï 6
4	10,0 m	216106	Air hose Ï 4mm PUR Blue
5	60,0 m	216116	Air hose Ï 6mm PUR Red
6	60,0 m	216118	Air hose Ï 6mm PUR Blue
7	40,0 m	216119	Air hose Ï 6mm Nylon Yellow
8	2,0 m	216124	Air hose Ï 8mm PUR Blue
9	2,0 m	216126	Air hose Ï 10mm PUR White
10	9,0 m	600528	Cable OZ 4x0,75mm| PVC
11	10,0 m	600635	Cable JZ 3x0,75mm| PVC
12	8,5 m	600645	Cable CY-JZ 4x1,0mm| PVC w/screen
13	1	M101695	Beam Washer HG10 Assembly
14	1	M101714	Skin mover assembly HG10
15	1	M101741	Beam HG10, nose assembly
16	1	M101752	Sticker for 194040
17	1	M101754	Control cabinet assembly 2
18	2	M101818	Cylinder mount assembly 1
19	1	M101819	Cylinder mount assembly 7
20	1	M101822	Beam scraper
21	1	M101837	Frame Complet HG10
22	1	M101856	Skind scraper HG10
23	1	M101873	Machine Cover
24	1	M101874	Chain system HG10
25	1	M101877	Cylinder mount assembly 2
26	2	M101878	Cylinder mount assembly 3
27	1	M101891	Support roll, cover assembly
28	1	M101900	Water heating system HG10
29	1	M101908	Console and guides for beam, HG10
30	1	M101923	Cylinder mount assembly 4
31	1	M101924	Motor Ass. RS Top 1
32	1	M101925	Motor Ass. LS Bottom 1
33	1	M101926	Motor Ass. RS Bottom 1
34	1	M101927	Motor Ass. Top 1
35	1	M101928	Motor Ass. RS Top 2
36	1	M101929	Motor Ass. RS Bottom 2
37	1	M101930	Motor Ass. LS Top 2
38	1	M101931	Motor Ass. LS Bottom 2
39	1	M101932	Motor Ass. LS Top 1
40	1	M101933	Slide LS Bottom 1
41	1	M101934	Slide RS Top 1
42	1	M101935	Slide RS Top 2
43	1	M101936	Slide LS Top 2
44	2	M101937	Slide RS Bottom 1/2
45	1	M101938	Slide LS Bottom 2
46	1	M101939	Slide LS Top 1
47	1	M101940	Motor Ass. Top 2
48	1	M101942	Cylinder mount assembly 5
49	2	M101943	Cylinder mount assembly 6
50	1	M101956	Sawdust Dispenser HG10
51	1	M101977	Light for fleshing section
52	1	M101982	Pneumatic Components Frame
53	1	M101983	Pneumatic Components Door 1
54	1	M101984	Pneumatic Components Door 2
55	1	M102000	Slide TOP 2
56	1	M102002	Slide TOP 1
57	59,0 m	M102046	Cable PUR-GELB-JZ 4x1,5mm| PUR
58	1	M102047	Id plate HG 10 Hot spray
59	19,3 m	M102060	Cable JZ 4x1,5mm| PVC
60	22	M11906	Electric mounting 194040 (hour)

Break all edges

Revision:	Approved	Date:	Revision Description
2	KKS	23-06-2017	Buttom roll cylinder changed upside-down

This drawing is property of HERNESTED GRAPPEN A/S. It must not be copied or reproduced without written permission from HERNESTED GRAPPEN A/S.

HG

Scale: 1 : 10

Not specified tolerance according to: DS/ISO 2768-m

Sheet size: A1

Surface properties: No

Sheet: 1 /4

Part No: M101978

Material:

Description 1: HG 10 Hot Spray

Description 2:

B-B (1 : 10)
Beam cleaner

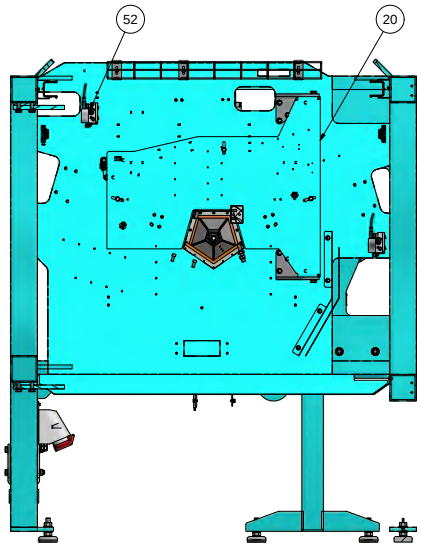

VIEW10 (1 : 10)
Skin scraper

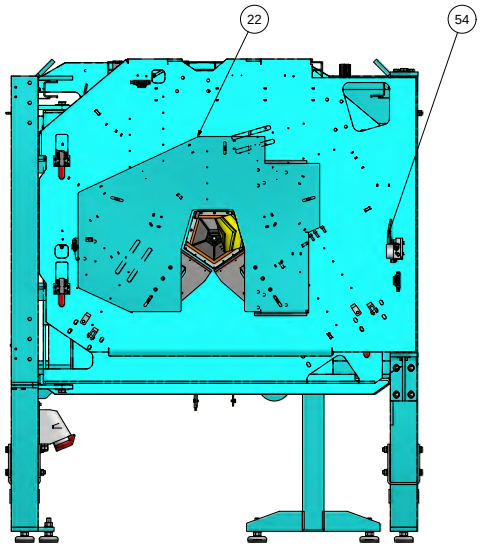

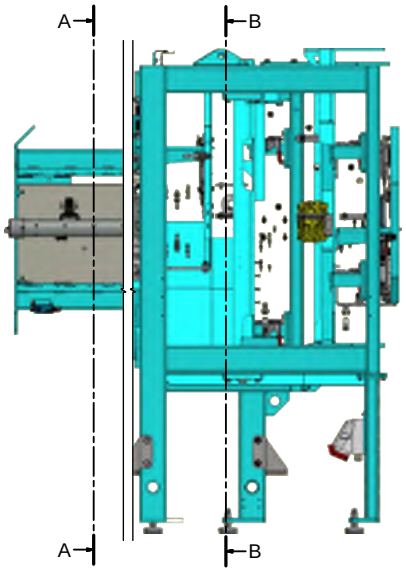

A-A (1 : 10)
Beam washer

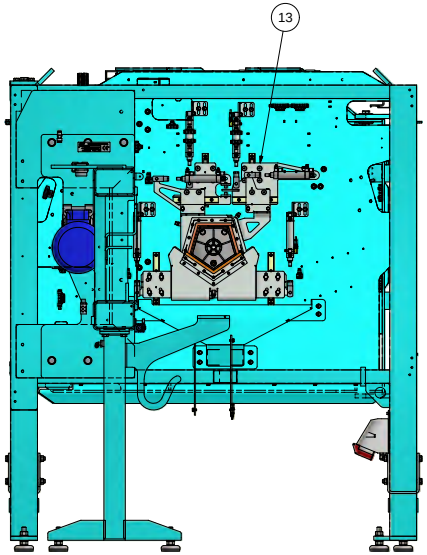

Break all edges

Revision:	Approved	Date:	Revision Description
2	KKS	23-06-2017	Buttom roll cylinder changed upside-down

HG

Scale: 1 : 10
Not specified tolerance according to: DS/ISO 2768-m
Sheet size: A1
Surface properties: No
Sheet: 2 /4
Part No: M101978
Material:
Description 1: HG 10 Hot Spray
Description 2:

This drawing is property of HARVEST GROUP HG A/S. It must not be reproduced or given to a third party without its consent.

D-D (1 : 10)
SET 1

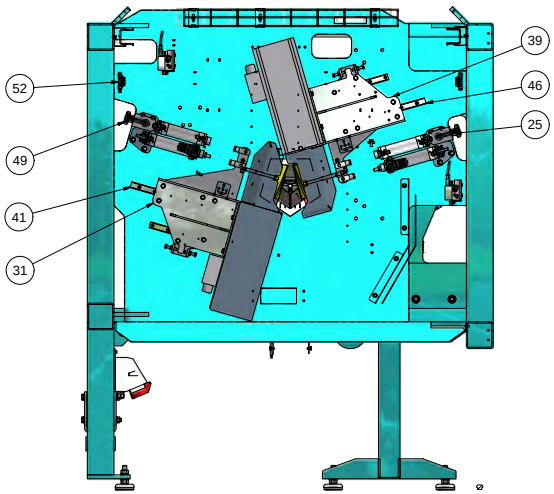

C-C (1 : 10)
SET 3

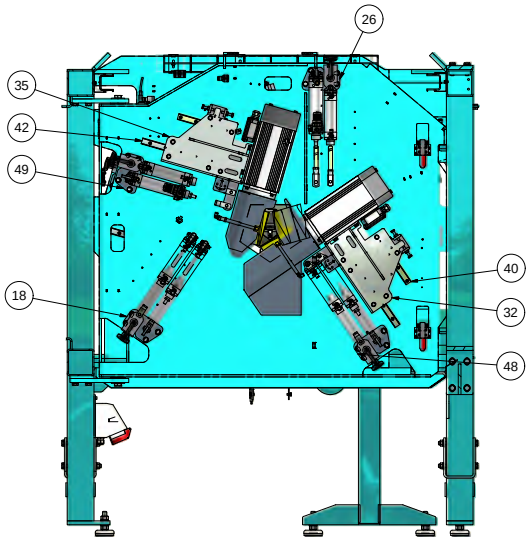

(1 : 10)
SET 5

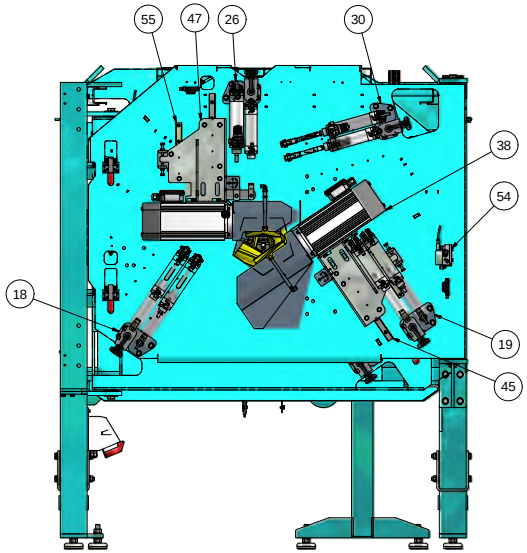

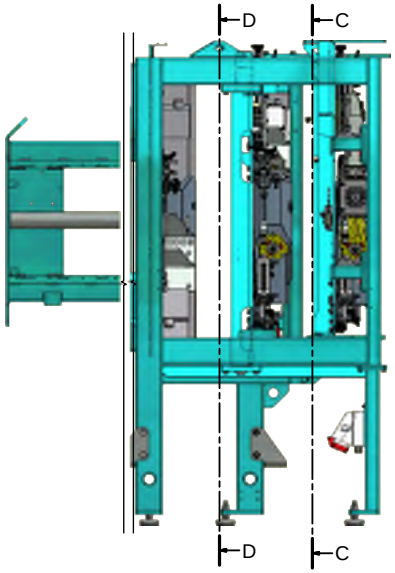

Break all edges

Scale: 1 : 10	Not specified tolerance according to: DS/ISO 2768-m		Sheet size: A1
	Surface properties: No		Sheet: 3 /4
Part No.: M101978	Material:		
Description 1: HG 10 Hot Spray			
Description 2:			

Revision:	Approved	Date:	Revision Description
2	KKS	23-06-2017	Buttom roll cylinder changed upside-down

This drawing is property of HENGSTED GRUPPEN A/S. Copying or distribution without our permission is prohibited.

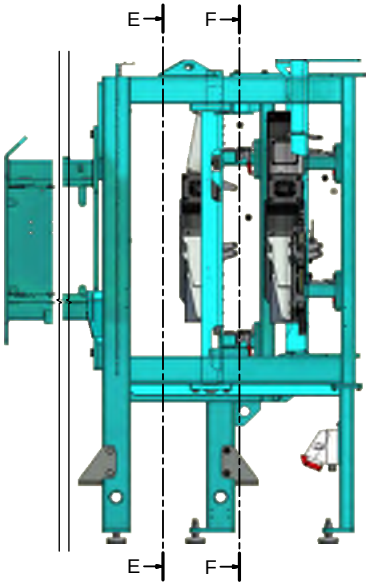

E-E (1 : 10)
SET 2

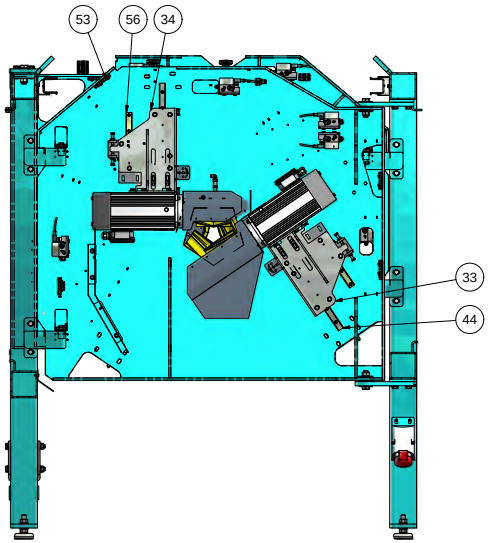

F-F (1 : 10)
SET 4

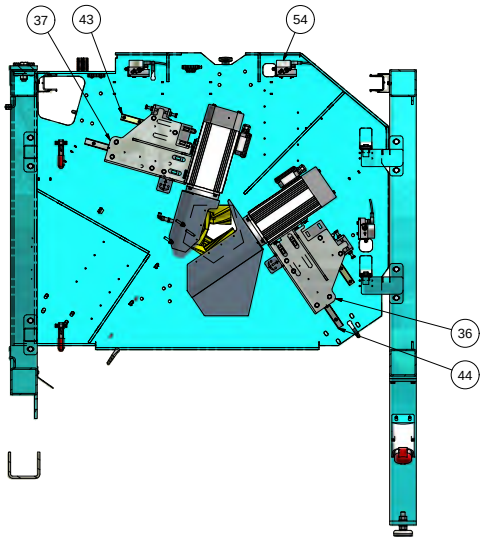

Break all edges

Revision:	Approved	Date:	Revision Description
2	KKS	23-06-2017	Buttom roll cylinder changed upside-down

HG

Scale: 1 : 10

Not specified tolerance according to: DS/ISO 2768-m

Sheet size: A1

Surface properties: No

Sheet: 4 /4

Part No.: M101978

Material:

Description 1: HG 10 Hot Spray

Description 2:

This drawing is property of HEROSTED GRAPHIX A/S. It must not be copied or disclosed to third parties without our written consent.

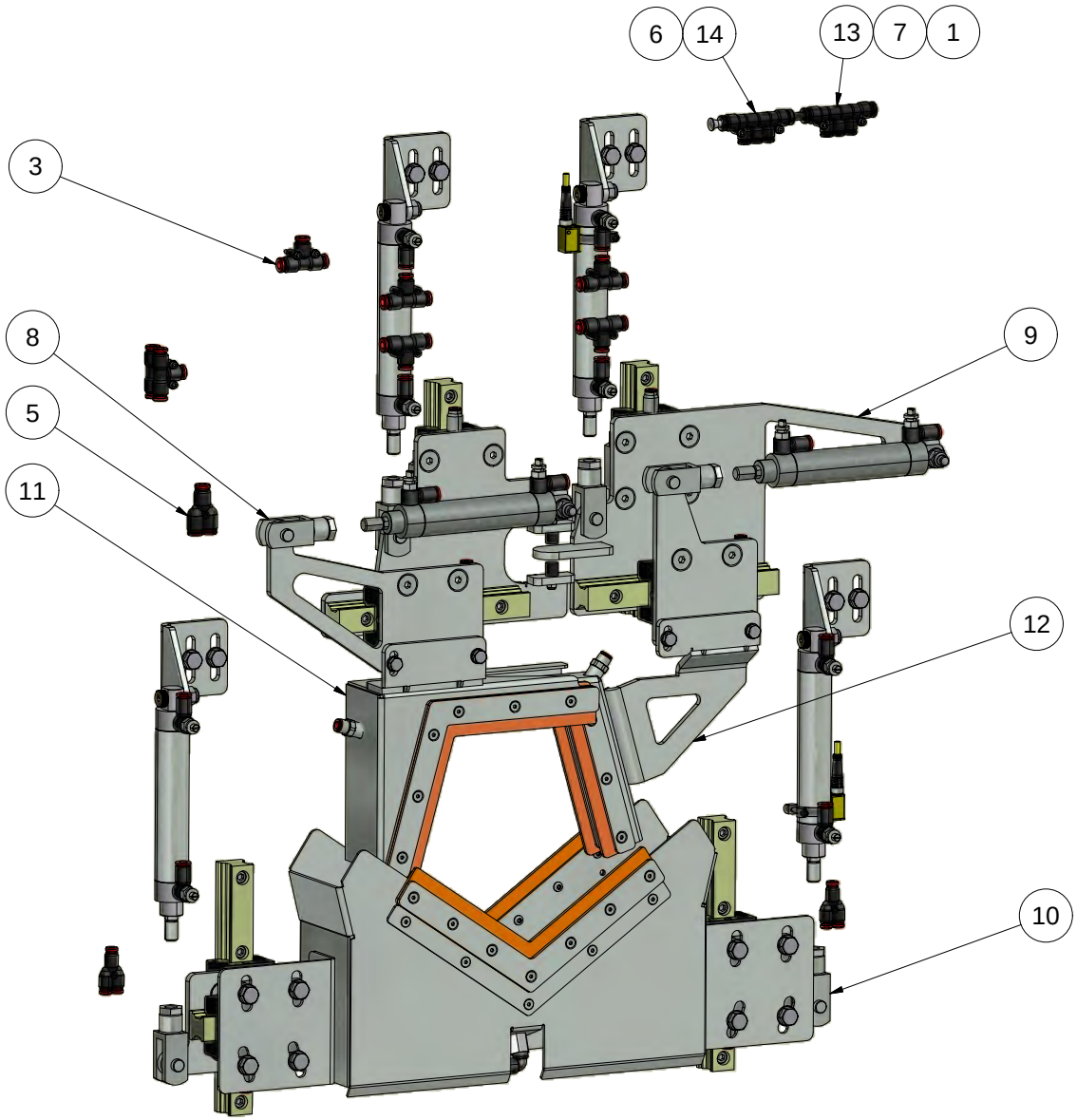

PARTS LIST			
ITEM	QTY	PART NUMBER	DESCRIPTION
1	6	10203020	Hexagon cylinder head M3x20 FZB
2	2	10203030	Hexagon cylinder head M3x30 FZB
3	3	215850	Tee Ï 6 x Ï 6 x Ï 6
4	2	215857	Y-connector 2xÏ 4 x Ï 4
5	1	215860	Y-connector 2xÏ 6 x Ï 6
6	1	216748	Plug Ï 6 mm
7	8	82103000	Washer M3 FZB
8	1	M101668	Left Moving Base
9	1	M101669	Right Moving Base
10	1	M101670	Buttom Lip
11	1	M101700	Top left head assembly
12	1	M101702	Top Right head assembly
13	1	M201140	Manifold Ï 6 x 3xÏ 4 x Ï 6
14	1	M201160	Manifold stem Ï 6 x 3xÏ 4 x Ï 6 pipe

Breake all edges

Revision:	Approved	Date:	Revision Description
1	MBO	19-02-2016	Made

The document is property of HEDENSTED GRUPPEN A/S and may not be copied or disclosed to any third person.

HEDENSTED GRUPPEN

Scale: 1 : 4	Not specificed tolerance according to: DS/ISO 2768-m		Sheet size: A3
	Surface properties: No		Sheet: 1 /1
Part No.: M101695	Material:		
Description 1: Beam Washer HG10 Assembly			
Description 2:			

PARTS LIST			
ITEM	QTY	PART NUMBER	DESCRIPTION
1	7	10206025	Hexagon cylinder head M6x25 FZB
2	2	11408016	Hexagon bolt M8x16 FZB
3	1	11408030	Hexagon bolt M8x30 FZB
4	1	11408065	Hexagon bolt M8x65 FZB
5	2	17904000	Self-locking nut M4 FZB
6	2	17908000	Self-locking nut M8 FZB
7	8	20408016	Hexagon countersunk head M8x16 FZB
8	1	207989	Ball guide rail s.25/170mm
9	1	207990	Ball guide rail s.25/200mm
10	2	210427	Lock nut M10x1,25 FZB
11	1	211018	Cylinder RT/57225/M/80
12	2	214115	F-Bracket QM/8025/25
13	4	215110	Flow control banjo Ï 6 x 1/8"t
14	2	215850	Tee Ï 6 x Ï 6 x Ï 6
15	2	215926	Straight connector Ï 4 x M6
16	2	222300	Ball runner block s.25 wide
17	2	222353	Vibration absorber Ï 10x10 - M4
18	5	82108000	Washer M8 FZB
19	1	M101631	Upper Left Baseplate
20	1	M101633	Left Moving Plate
21	1	M101639	Cylinder spacer 30,4mm
22	1	M101659	Cylinder Bracket
23	1	M101971	Cylinder RT/57225/M/100

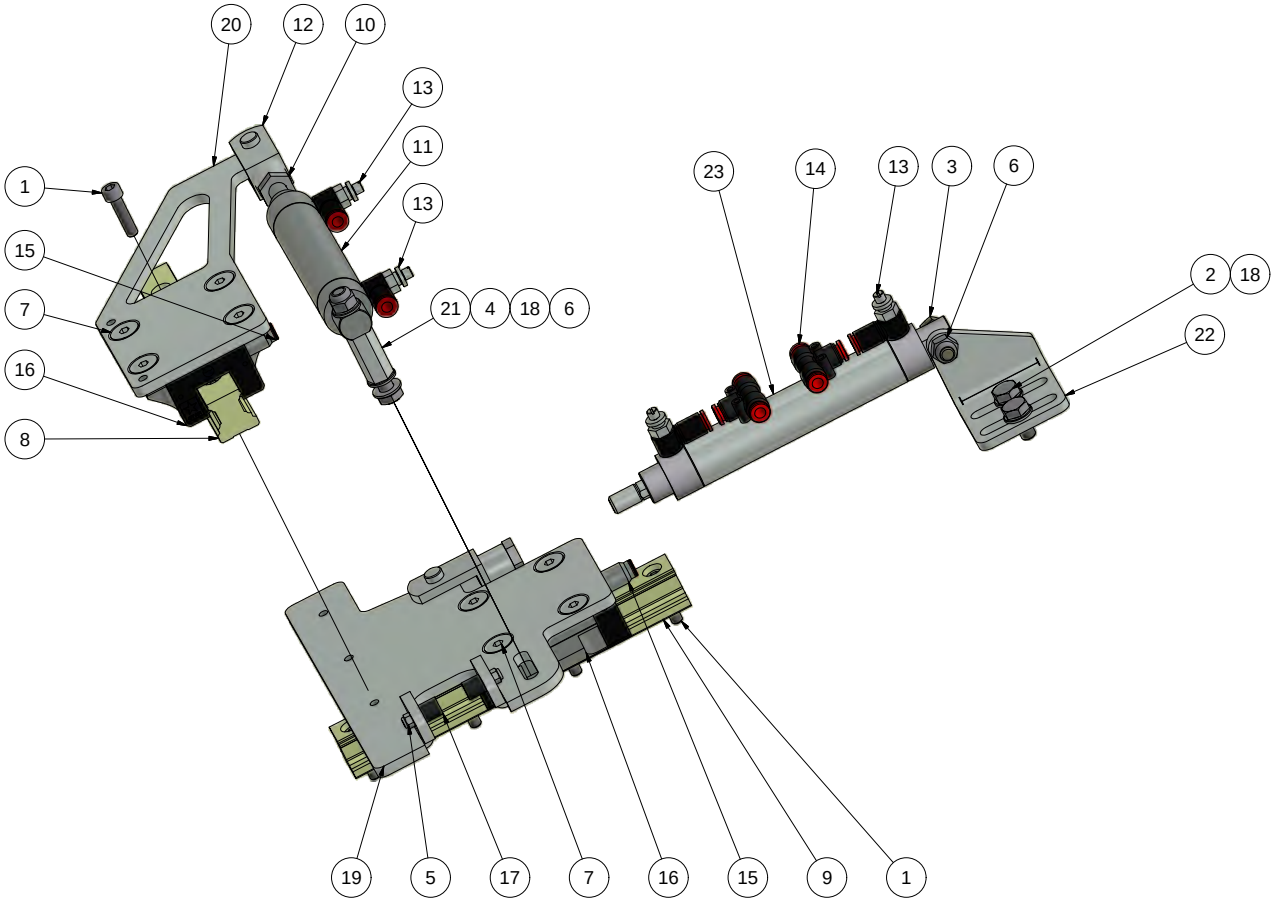

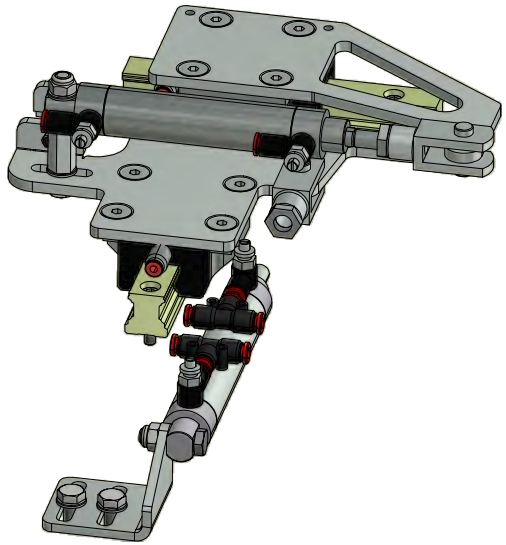

Break all edges

Revision:	Approved	Date:	Revision Description
1	MBO	13-01-2016	Made

This drawing is the property of HEDE NSTED GRUPPEN A/S. Reproduction or disclosure to third parties without written consent is prohibited.

HEDE NSTED GRUPPEN A/S

Scale: 1 : 2	Not specified tolerance according to: DS/ISO 2768-m	Sheet size: A2
	Surface properties: No	Sheet: 1 /1
Part No.: M101668	Material:	
Description 1: Left Moving Base		
Description 2:		

PARTS LIST			
ITEM	QTY	PART NUMBER	DESCRIPTION
1	7	10206025	Hexagon cylinder head M6x25 FZB
2	2	11408016	Hexagon bolt M8x16 FZB
3	1	11408030	Hexagon bolt M8x30 FZB
4	1	11408065	Hexagon bolt M8x65 FZB
5	2	17908000	Self-locking nut M8 FZB
6	8	20408016	Hexagon countersunk head M8x16 FZB
7	1	207989	Ball guide rail s.25/170mm
8	1	207990	Ball guide rail s.25/200mm
9	2	210427	Lock nut M10x1,25 FZB
10	1	211018	Cylinder RT/57225/M/80
11	2	214115	F-Bracket QM/8025/25
12	1	214311	Reed Inductive sensor for Roundline (Yellow)
13	1	214314	Cable w. plug M8 3P 3M
14	1	214319	Clamp for sensor Ï 8-25mm, KLP 25
15	4	215110	Flow control banjo Ï 6 x 1/8"t
16	2	215850	Tee Ï 6 x Ï 6 x Ï 6
17	2	215926	Straight connector Ï 4 x M6
18	2	222300	Ball runner block s.25 wide
19	5	82108000	Washer M8 FZB
20	1	M101639	Cylinder spacer 30,4mm
21	1	M101646	Left Moving Plate
22	1	M101658	Upper Right Baseplate
23	1	M101659	Cylinder Bracket
24	1	M101971	Cylinder RT/57225/M/100

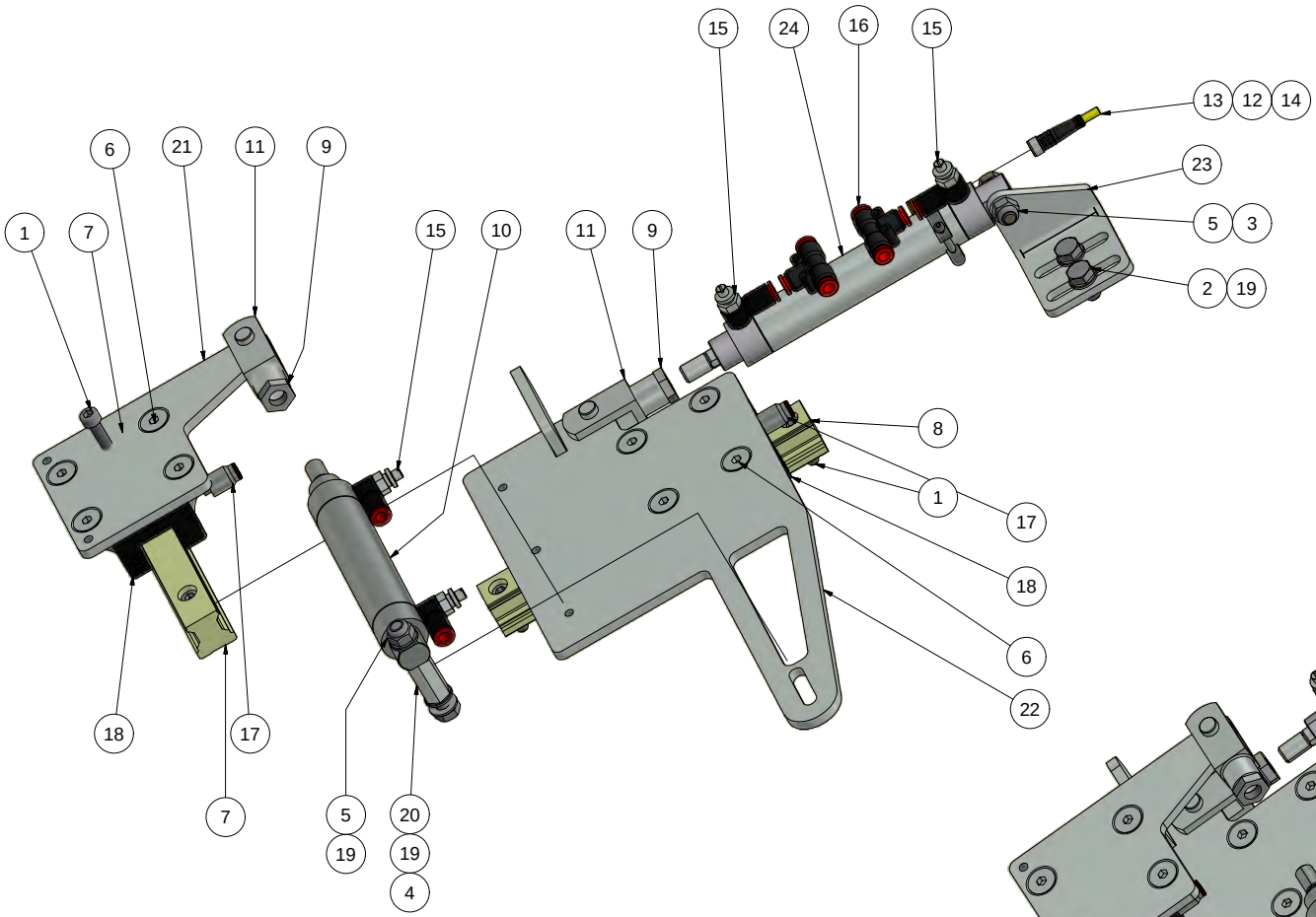

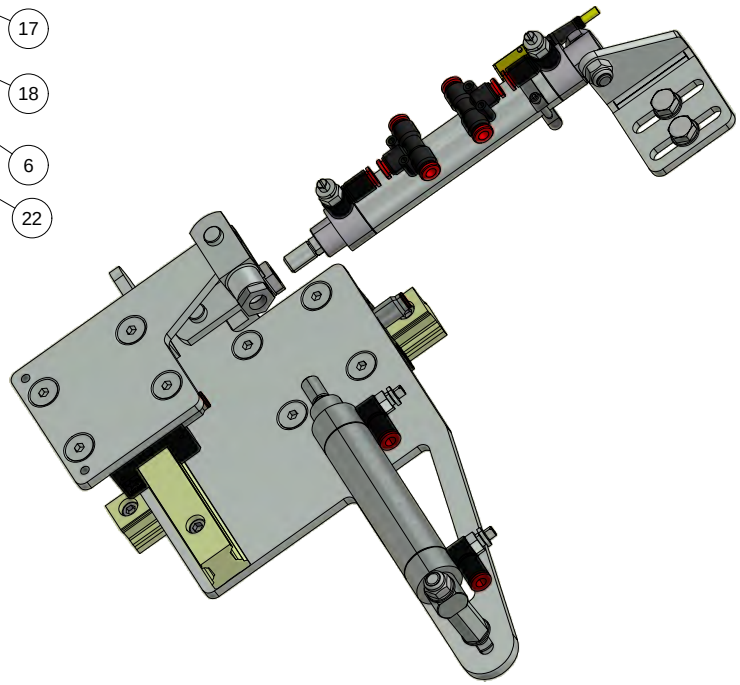

Break all edges

Revision:	Approved	Date:	Revision Description
1	MBO	13-01-2016	Made

This drawing is the property of HEDE NSTED GRUPPEN A/S. Reproduction or disclosure to third parties without written consent is prohibited.

HEDE NSTED GRUPPEN A/S

Scale: 1 : 2	Not specified tolerance according to: DS/ISO 2768-m	Sheet size: A2
	Surface properties: No	Sheet: 1 /1
Part No.: M101669	Material:	
Description 1: Right Moving Base		
Description 2:		

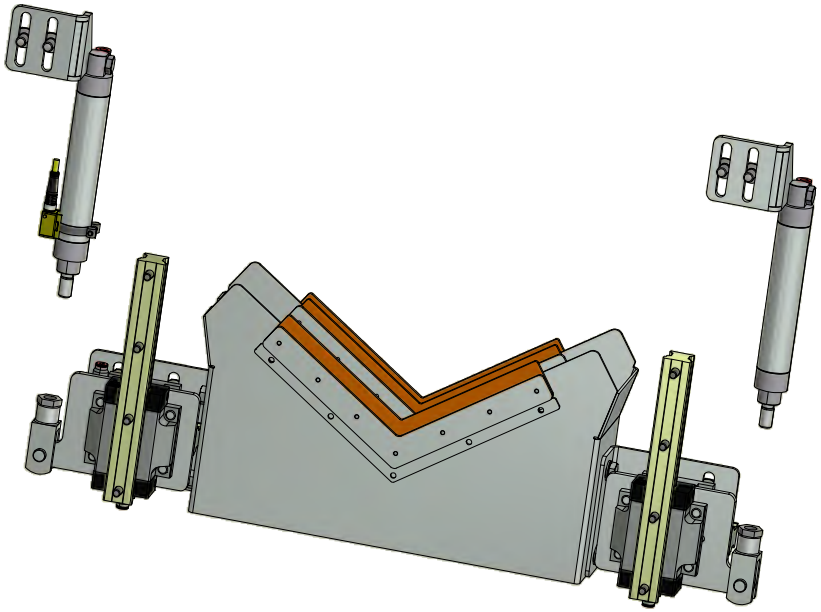

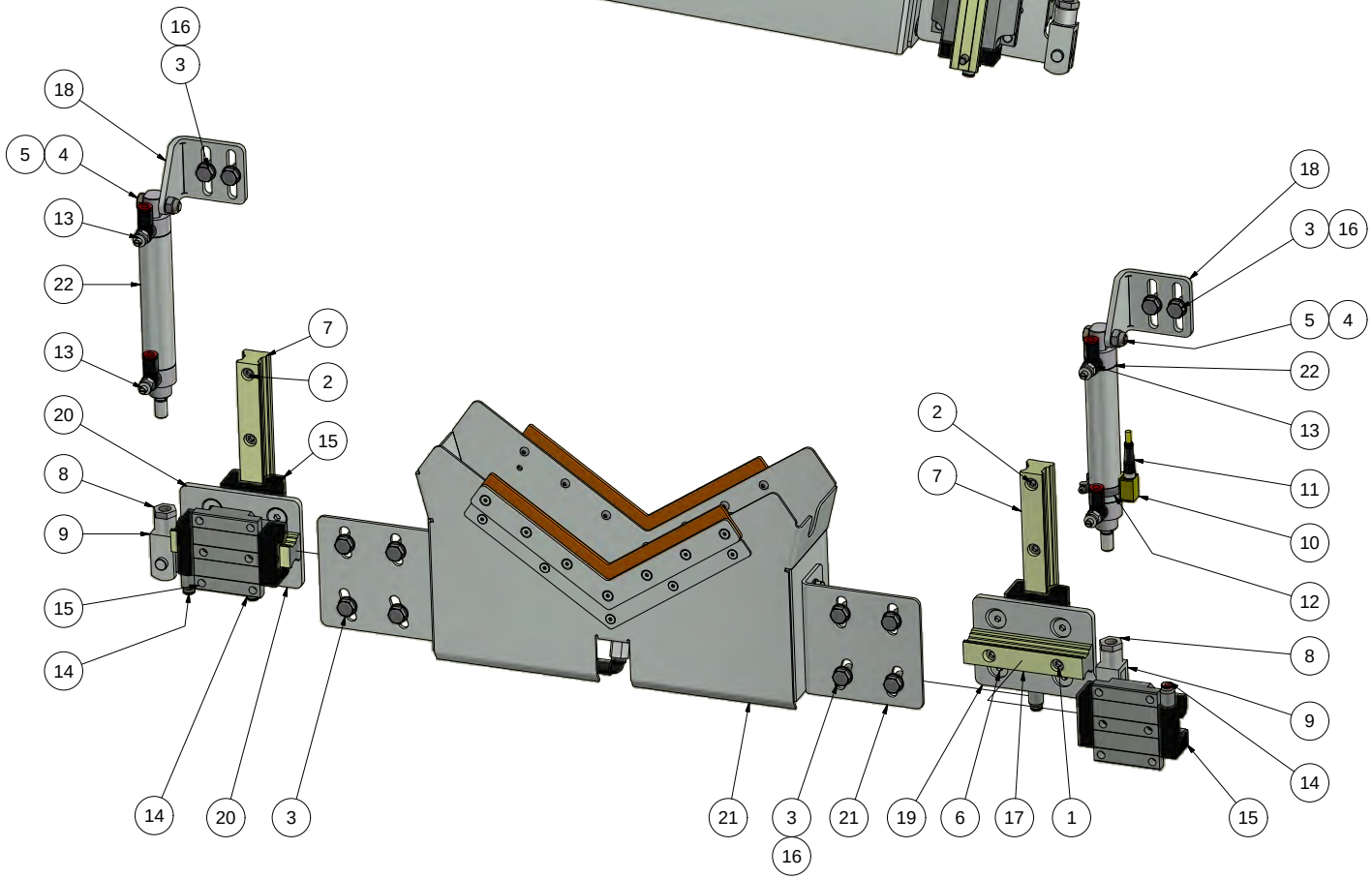

PARTS LIST

ITEM	QTY	PART NUMBER	DESCRIPTION
1	4	10206020	Hexagon cylinder head M6x20 FZB
2	8	10206025	Hexagon cylinder head M6x25 FZB
3	12	11408016	Hexagon bolt M8x16 FZB
4	2	11408030	Hexagon bolt M8x30 FZB
5	2	17908000	Self-locking nut M8 FZB
6	8	20408016	Hexagon countersunk head M8x16 FZB
7	2	207990	Ball guide rail s.25/200mm
8	2	210427	Lock nut M10x1,25 FZB
9	2	214115	F-Bracket QM/8025/25
10	1	214311	Reed Inductive sensor for Roundline (Yellow)
11	1	214314	Cable w. plug M8 3P 3M
12	1	214319	Clamp for sensor Ï 8-25mm, KLP 25
13	4	215110	Flow control banjo Ï 6 x 1/8"t
14	4	215926	Straight connector Ï 4 x M6
15	4	222300	Ball runner block s.25 wide
16	12	82108000	Washer M8 FZB
17	2	M101647	Ball guide rail s.25/105mm
18	2	M101659	Cylinder Bracket
19	1	M101677	Buttom Cylinder Bracket Right
20	1	M101678	Buttom Cylinder Bracket Left
21	1	M101701	Bottom head assembly
22	2	M101971	Cylinder RT/57225/M/100

Break all edges

Revision:	Approved	Date:	Revision Description
1	MBO	13-01-2016	Made

This drawing is strictly confidential and must not be copied or disclosed to third parties without written consent of HEDE NSTED GRUPPEN A/S

HEDENSTED GRUPPEN

Scale: 1 : 3	Not specificed tolerance according to: DS/ISO 2768-m	Sheet size: A2
	Surface properties: No	Sheet: 1 /1
Part No.: M101670	Material:	
Description 1: Buttom Lip		
Description 2:		

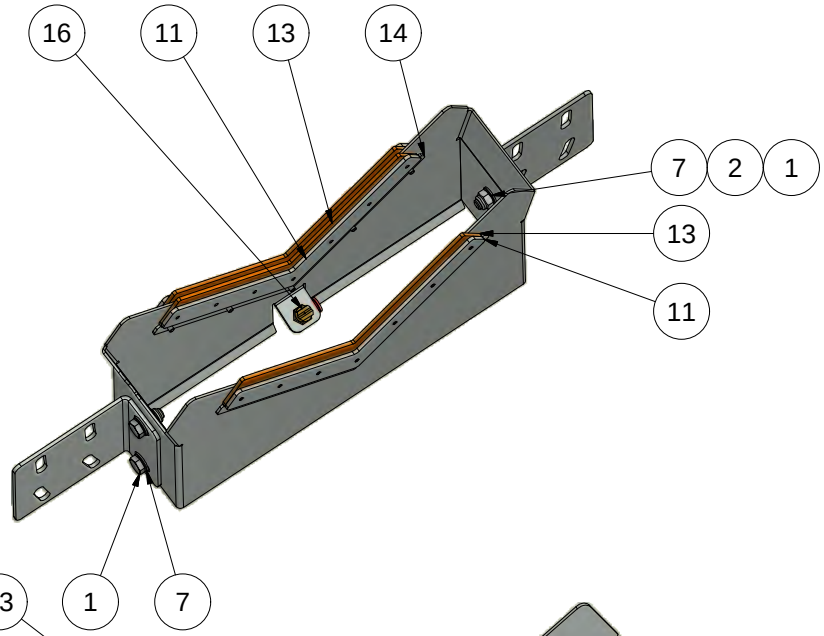

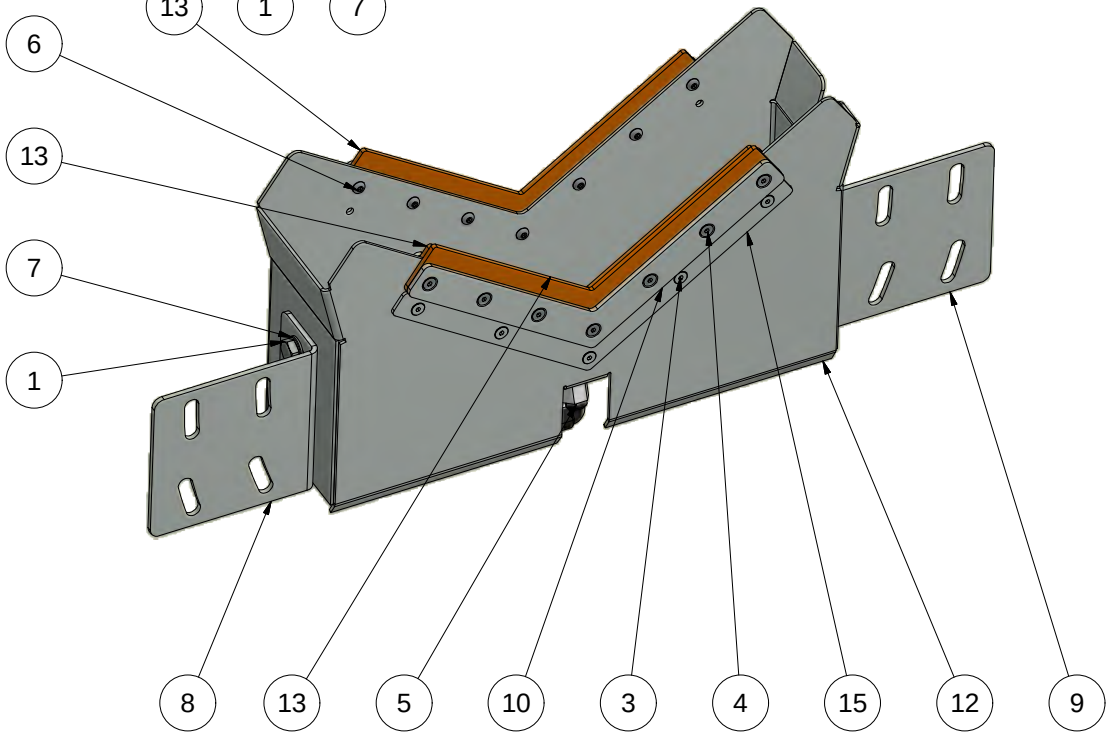

PARTS LIST

ITEM	QTY	PART NUMBER	DESCRIPTION
1	4	12908020	Hexagon bolt M8x20 A2
2	4	17908000	Self-locking nut M8 FZB
3	5	20404010	Hexagon countersunk head M4x10 FZB
4	7	20404014	Hexagon countersunk head M4x14 FZB
5	1	215736	Elbow swivel Ï 6 x Female 1/8"
6	7	76004008	Bottonhead bolt M4x8 FZB.ipt
7	8	82108000	Washer M8 FZB
8	1	M101676	Buttom Lip Bracket Left
9	1	M101679	Buttom Lip Bracket Right
10	1	M101685	Clamp Plate
11	2	M101688	Clamp Plate
12	1	M101691	Buttom Lip
13	3	M101696	Rubber for Bottom
14	1	M101969	Lip Rubber Fixture 2
15	1	M101970	Lip Rubber Fixture 3
16	1	M200986	Nozzle, flatjet 1/8" 60gr 1120

Breake all edges

Revision:	Approved	Date:	Revision Description
1	MBO	13-01-2016	Made

The document is property confidential and may not be in no account be copied or discloses to any third person.
HEDENSTED GRUPPEN A/S

HEDENSTED GRUPPEN

Scale: 1 : 3

Not specificed tolerance according to: DS/ISO 2768-m

Surface properties: No

Sheet size: A3

Sheet: 1 /2

Part No.: M101701

Material:

Description 1: Bottom head assembly

Description 2:

A-A (1 : 2)

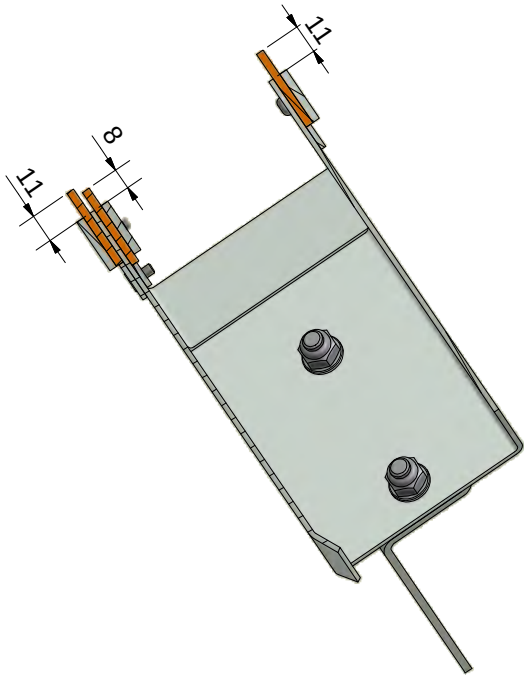

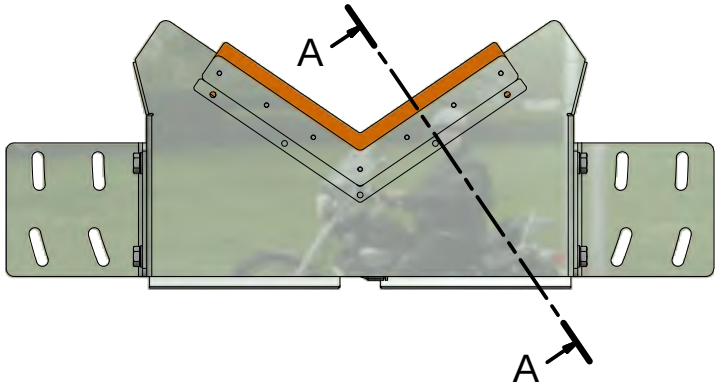

Breake all edges

HEDENSTED GRUPPEN	Scale: 1 : 3	Not specificed tolerance according to: DS/ISO 2768-m	Sheet size: A3
		Surface properties: No	Sheet: 2 /2
Part No.: M101701	Material:		
Description 1: Bottom head assembly			
Description 2:			

The document is property confidential and may on no account be copied or discloses to any third person.
HEDENSTED GRUPPEN A/S

Revision:	Approved	Date:	Revision Description
1	MBO	13-01-2016	Made

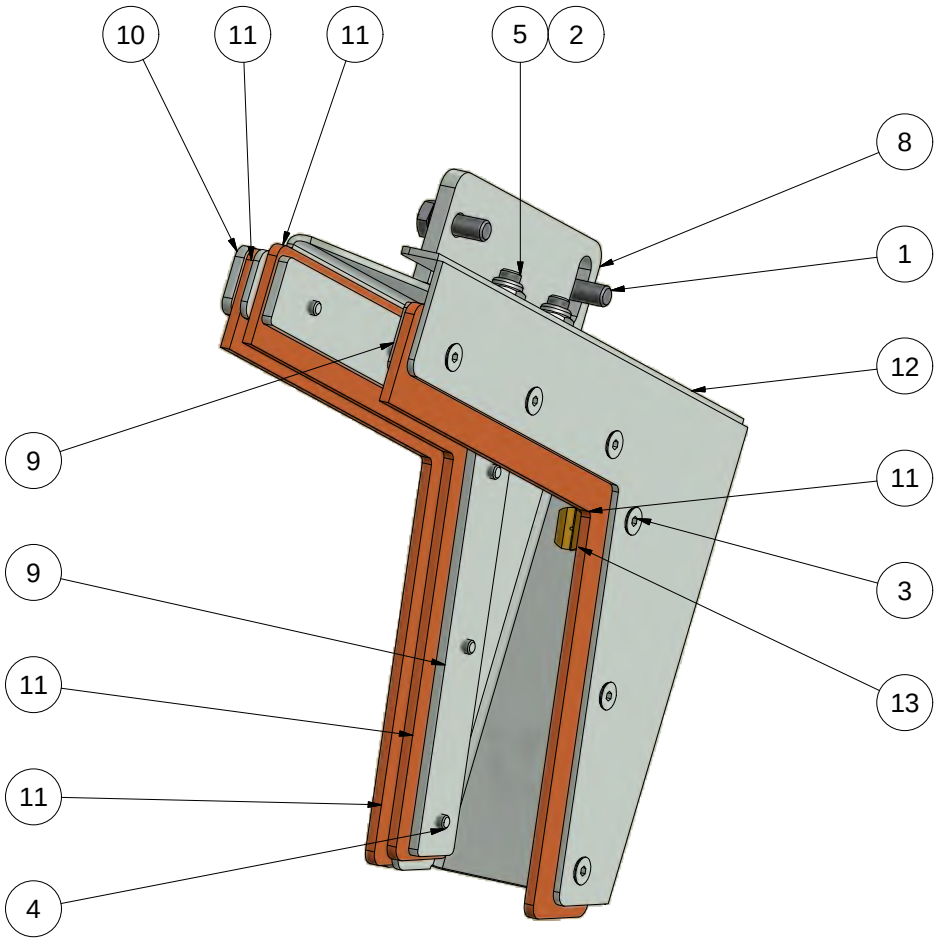

PARTS LIST			
ITEM	QTY	PART NUMBER	DESCRIPTION
1	2	11406016	Hexagon bolt M6x16 FZB
2	2	17906000	Self-locking nut M6 FZB
3	6	20404010	Hexagon countersunk head M4x10 FZB
4	6	20404016	Hexagon countersunk head M4x16 FZB
5	2	20406020	Hexagon countersunk head M6x20 FZB
6	1	215925	Straight connector Ï 6 x 1/8"
7	4	82106000	Chamfered Washer M6 FZB
8	1	M101681	Left Lip House Bracket
9	2	M101684	Clamp Plate
10	1	M101687	Clamp Plate
11	3	M101698	Rubber for Left Upper Lip
12	1	M101703	Left Lip House
13	1	M200986	Nozzle flat jet 1-8 60gr

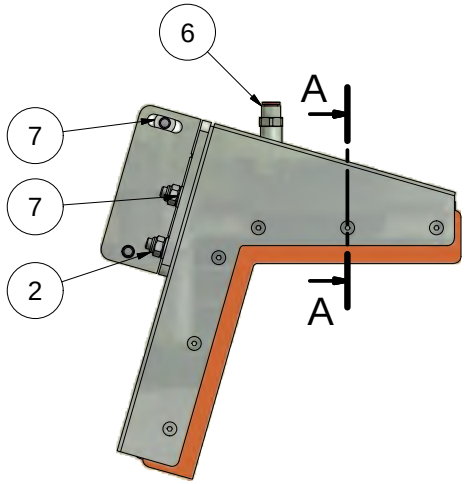

A-A (1 : 3)

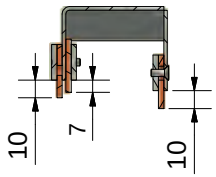

Breake all edges

Revision:	Approved	Date:	Revision Description
1	KL	18-02-2016	Made

The document is strictly confidential and may not be in no account be copied or discloses to any third person.

HEDENSTED GRUPPEN A/S

Scale: 1 : 1,5	Not specificed tolerance according to: DS/ISO 2768-m		Sheet size: A3
	Surface properties: No		Sheet: 1 /1
Part No.: M101700	Material:		
Description 1: Top left head assembly			
Description 2:			

PARTS LIST			
ITEM	QTY	PART NUMBER	DESCRIPTION
1	2	11406016	Hexagon bolt M6x16 FZB
2	3	11408016	Hexagon bolt M8x16 FZB
3	6	20404010	Hexagon countersunk head M4x10 FZB
4	6	20404016	Hexagon countersunk head M4x16 FZB
5	1	215925	Straight connector Ï 6 x 1/8"
6	2	82106000	Chamfered Washer M6 FZB
7	3	82108000	Chamfered Washer M8 FZB
8	1	M101682	Right Lip House Bracket
9	1	M101683	Clamp Plate
10	1	M101686	Clamp Plate
11	1	M101689	Clamp Plate
12	1	M101690	Clamp Plate
13	1	M101692	Right Lip House
14	3	M101697	Right Upper Lip
15	1	M200986	Nozzle flat jet 1-8 60gr

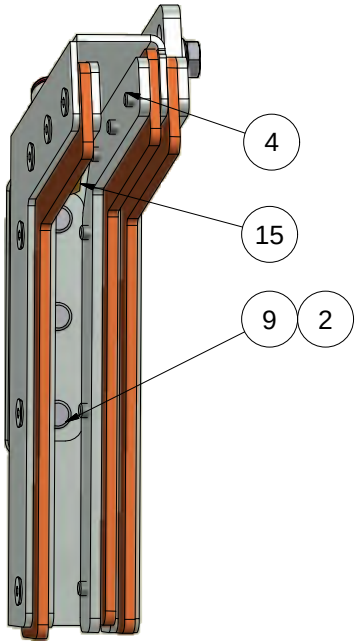

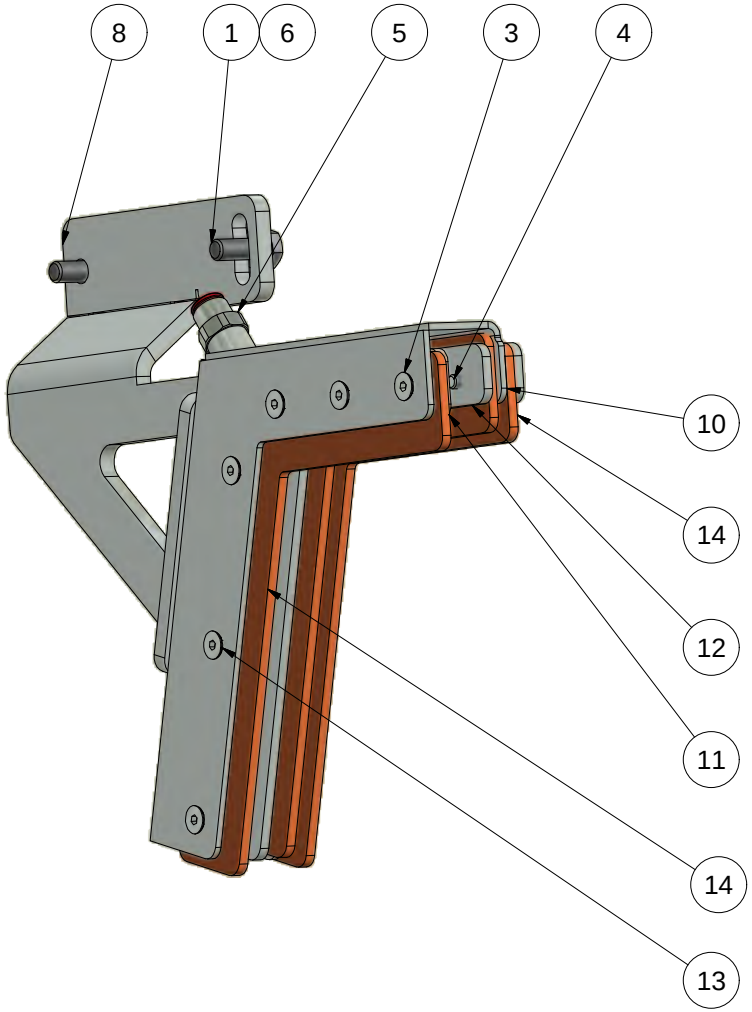

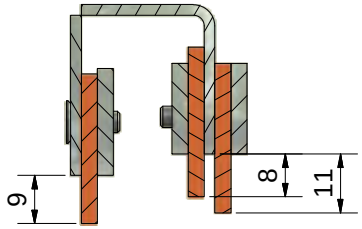

Breake all edges

Revision:	Approved	Date:	Revision Description
1	KL	18-02-2016	Made

The document is property of HEDENSTED GRUPPEN A/S and may not be reproduced or disclosed to any third person without the consent of HEDENSTED GRUPPEN A/S

HEDENSTED GRUPPEN	Scale: 1 : 1,5	Not specificed tolerance according to: DS/ISO 2768-m	Sheet size: A3
		Surface properties: No	Sheet: 1 /1
Part No.: M101702	Material:		
Description 1: Top Right head assembly			
Description 2:			

PARTS LIST			
ITEM	QTY	PART NUMBER	DESCRIPTION
1	2	11104040	Hexagon bolt M4x40 FZB
2	2	11104045	Hexagon bolt M4x45 FZB
3	8	11406016	Hexagon bolt M6x16 FZB
4	1	11408035	Hexagon bolt M8x35 FZB
5	4	17904000	Self-locking nut M4 FZB
6	1	17908000	Self-locking nut M8 FZB
7	1	210427	Lock nut M10x1,25 FZB
8	1	211630	Cylinder RT 57232/M/200
9	1	214115	F-Bracket QM/8025/25
10	2	215110	Flow control banjo Ï 6 x 1/8"t
11	2	215860	Y-connector 2xÏ 6 x Ï 6
12	1	215876	Y-connector 2xÏ 4 x Ï 6
13	8	82104000	Washer M4 FZB
14	2	82108000	Washer M8 FZB
15	8	82606000	Washer Ï 6,4x18x1,6 FZB
16	2	M100853	Side skirt M2015
17	1	M101656	Skin mover, clamp assembly
18	1	M101711	Skinmover cover HG10
19	1	M101715	Sawdust shelf for HG 10
20	1	M101716	End skirt HG10
21	1	M10729	Mounting plate for Rubber
22	0,5 m	M200327	Energi chain kolibri 30x30mm

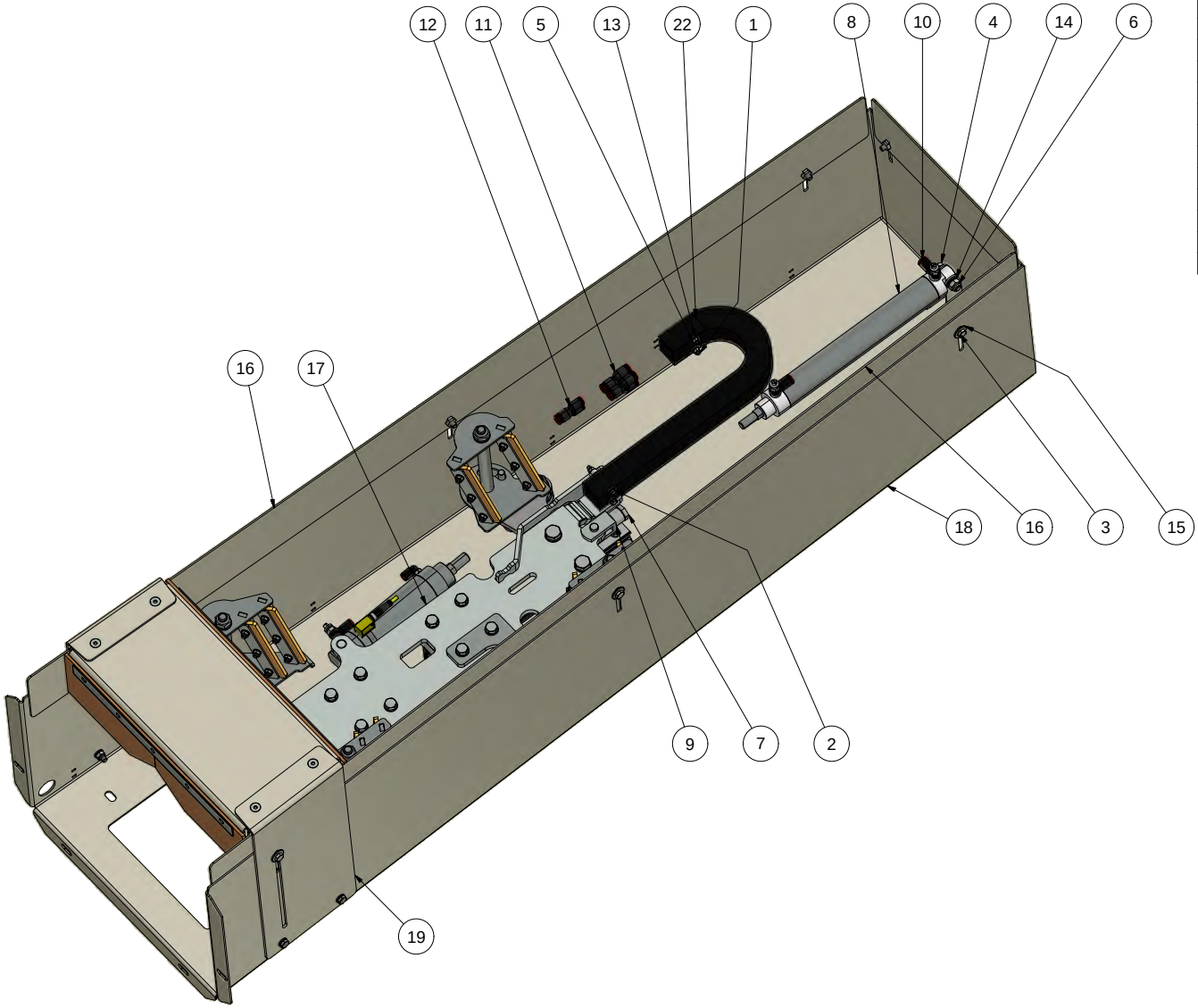

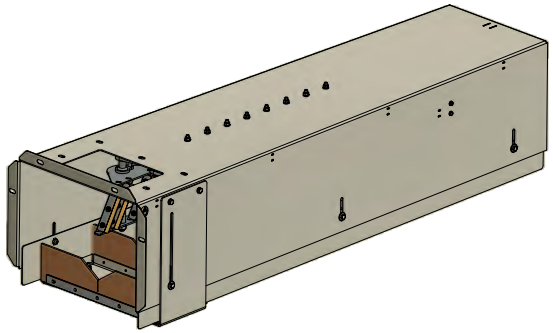

Break all edges

Revision:	Approved	Date:	Revision Description
1	KL	25-01-2016	Made

This drawing is strictly confidential and the property of HEDE NSTED GRUPPEN A/S

HEDENSTED GRUPPEN

Scale: 1 : 8	Not specificed tolerance according to: DS/ISO 2768-m	Sheet size: A2
	Surface properties: No	Sheet: 1 /1
Part No.: M101714	Material:	
Description 1: Skin mover assembly HG10		
Description 2:		

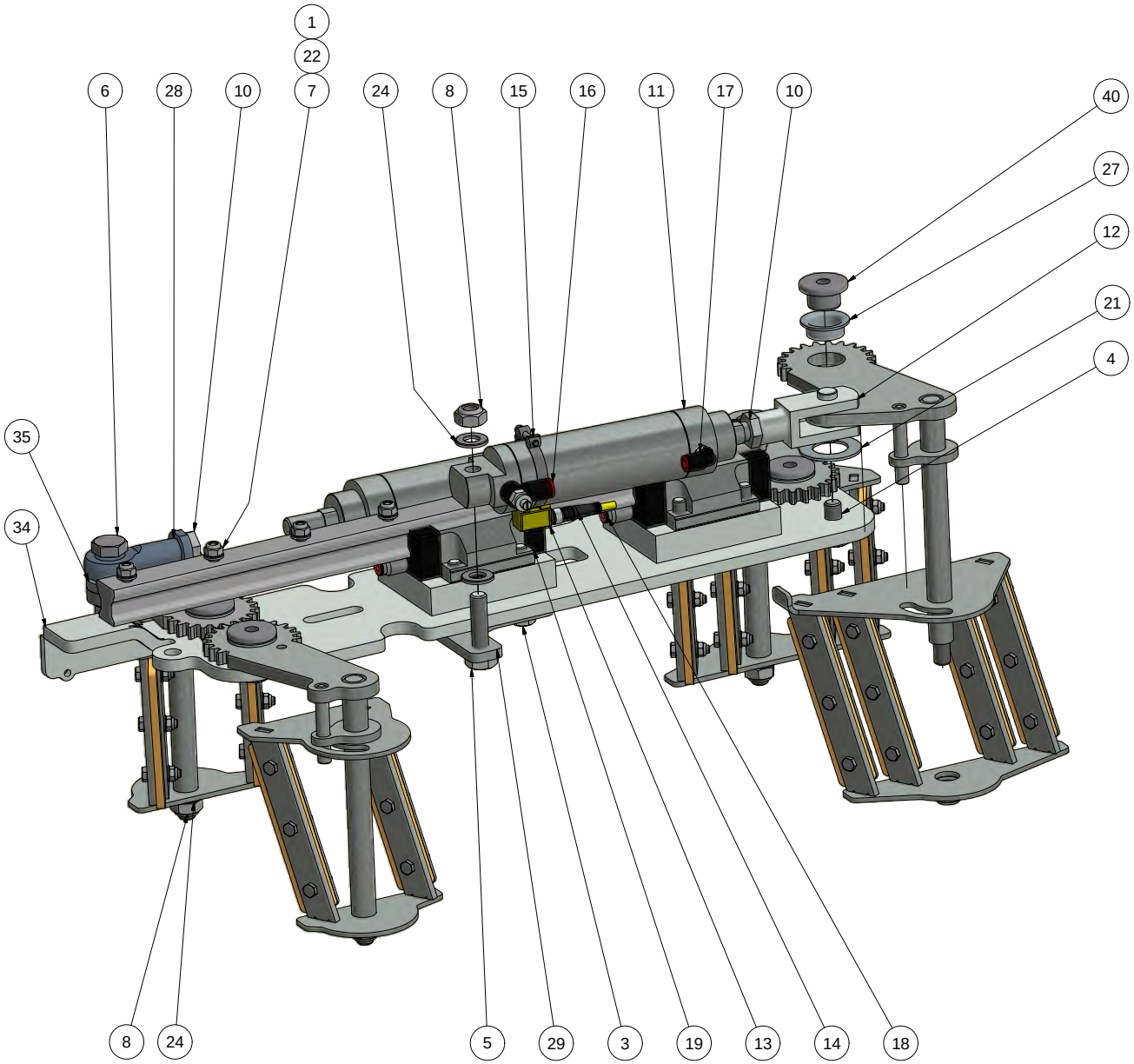

PARTS LIST

ITEM	QTY	PART NUMBER	DESCRIPTION
1	8	10206025	Hexagon cylinder head M6x25 FZB
2	1	11406012	Hexagon bolt M6x12 FZB
3	8	11408045	Hexagon bolt M8x45 FZB
4	4	11410020	Hexagon bolt M10x20 FZB
5	1	11410040	Hexagon bolt M10x40 FZB
6	1	11412045	Hexagon bolt M12x45 FZB
7	8	17906000	Self-locking nut M6 FZB
8	5	17910000	Self-locking nut M10 FZB
9	1	17912000	Self-locking nut M12 FZB
10	2	210428	Lock nut M12x1,25 FZB
11	2	211014	Cylinder RT/57240/M/80
12	1	214120	F-Bracket QM/8040/25
13	2	214311	Reed Inductive sensor for Roundline (Yellow)
14	2	214313	Cable w. plug M8 3P 10M
15	2	214321	Clamp for sensor Ï 25-80mm, KLP 80-VA
16	2	215110	Flow control banjo Ï 6 x 1/8"t
17	2	215730	Elbow swirvel Ï 6 x 1/8"t
18	2	215926	Straight connector Ï 4 x M6
19	2	222300	Ball runner block s.25 wide
20	1	222306	Ball guide rail s.25 /450mm
21	4	222597	Slide washer Ï 22xÏ 38 x1,5
22	8	82106000	Washer M6 FZB
23	8	82108000	Washer M8 FZB
24	10	82110000	Washer M10 FZB
25	1	82112000	Washer M12 FZB
26	1	82606000	Washer Ï 6,4x18x1,6 FZB
27	4	M100856	Slide bearing ß20x23 - 8mm
28	1	M101451	UF bracket QM/8040/32
29	1	M101657	Cylinderbracket skinmover
30	1	M101662	Clamp arm HG10, Left back
31	1	M101673	Skinclamp for HG10, Right back
32	1	M101674	Skinclamp for HG10, Left back
33	1	M101675	Clamp arm HG10, Right back
34	1	M101705	Base for skin mover HG10
35	1	M101708	Spacer for cylinder ß12,5 - ß30 - 6
36	1	M101717	Skinclamp for HG10, Left front
37	1	M101718	Skin clamp for HG, Right front
38	1	M101721	Clamp arm HG10, Right front
39	1	M101722	Clamp arm HG10, Left front
40	4	M200340	Shaft for arm

Break all edges

Revision:	Approved	Date:	Revision Description
1	KL	25-01-2016	Made

This drawing is the property of HEDE NSTED GRUPPEN A/S

HG HEDENSTED GRUPPEN

Scale: 1 : 2	Not specified tolerance according to: DS/ISO 2768-m	Sheet size: A2
	Surface properties: No	Sheet: 1 /2
Part No.: M101656	Material:	
Description 1: Skin mover, clamp assembly		
Description 2: HG10		

A (1 : 1)

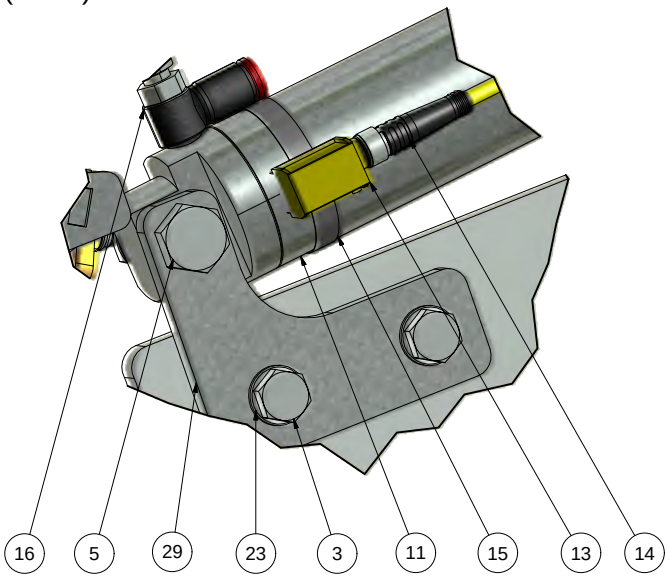

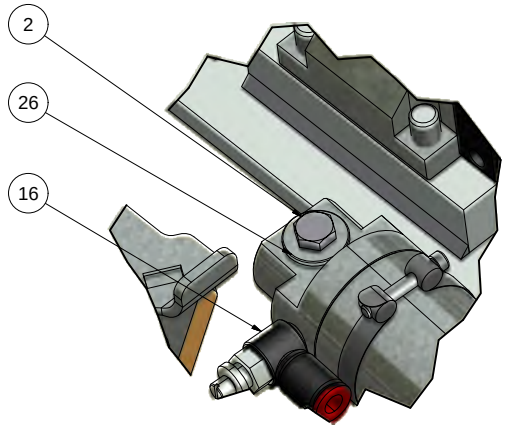

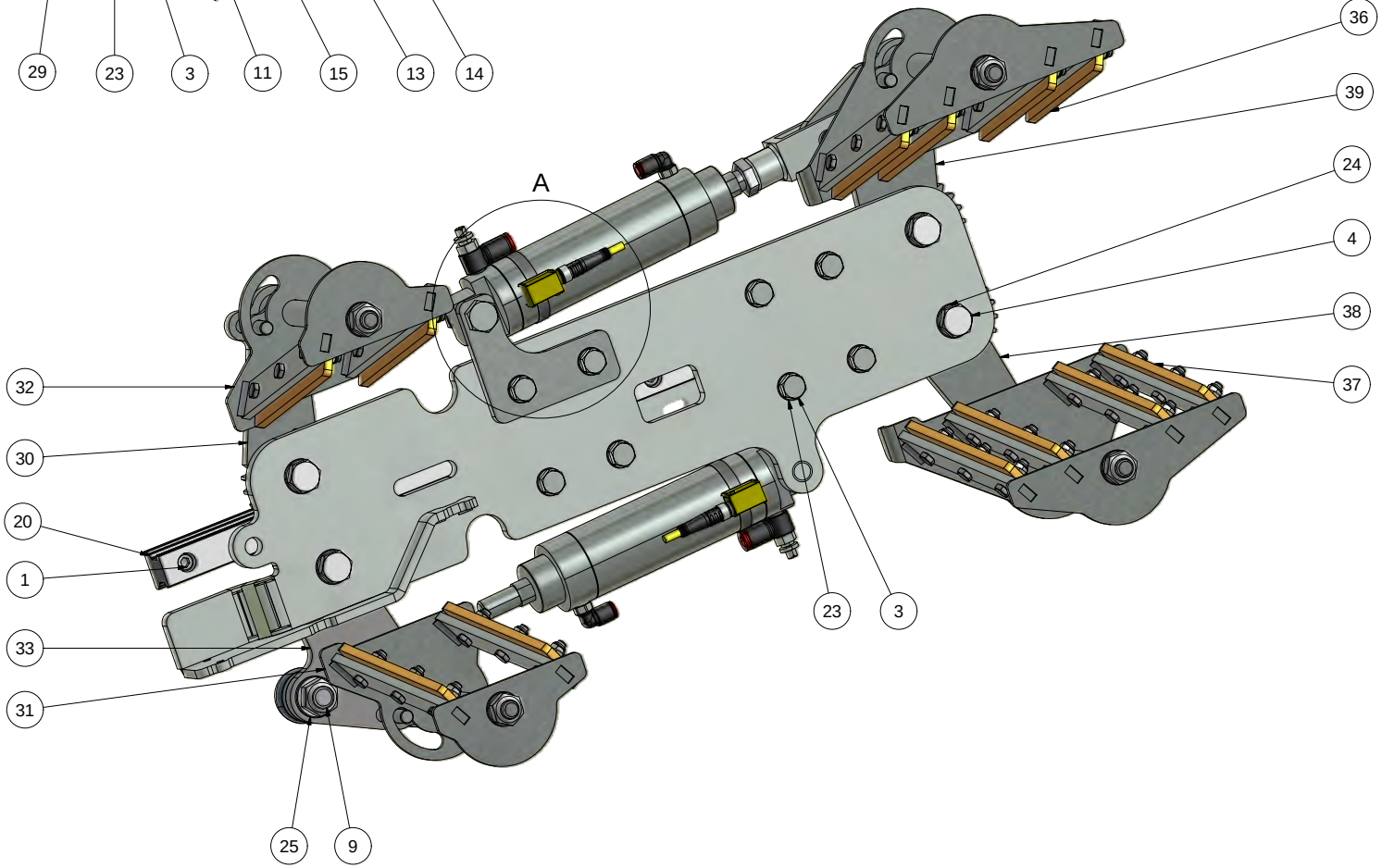

Break all edges

Revision:	Approved	Date:	Revision Description
1	KL	25-01-2016	Made

THIS DRAWING IS BOTH COPYRIGHT AND PROPRIETARY TO HEDE NSTED GRUPPEN A/S

HG HEDENSTED GRUPPEN

Scale: 1 : 2	Not specified tolerance according to: DS/ISO 2768-m	Sheet size: A2
	Surface properties: No	Sheet: 2 /2
Part No.: M101656	Material:	
Description 1: Skin mover, clamp assembly		
Description 2: HG10		

PARTS LIST			
ITEM	QTY	PART NUMBER	DESCRIPTION
1	6	11405020	Hexagon bolt M5x20 FZB
2	6	17905000	Self-locking nut M5 FZB
3	6	82105900	Chamfered Washer M5 FZB
4	2	M100513	Rubber for skinclamp
5	2	M100514	Tension plate for clamp
6	1	M101671	Base for skinclamp, Right back

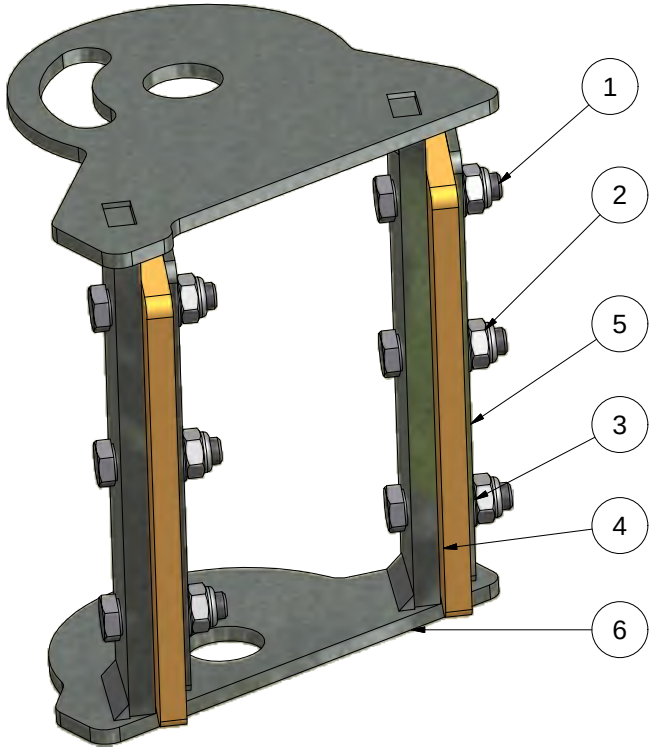

Break all edges

Revision:	Approved	Date:	Revision Description
1	KL	20-01-2016	Made

The document is property of HEDENSTED GRUPPEN A/S and may not be used or disclosed to any third person.

HEDENSTED GRUPPEN A/S

Scale: 1 : 1	Not specificed tolerance according to: DS/ISO 2768-m		Sheet size: A3
	Surface properties: No		Sheet: 1 /1
Part No.: M101673	Material:		
Description 1: Skinclamp for HG10, Right back			
Description 2:			

PARTS LIST			
ITEM	QTY	PART NUMBER	DESCRIPTION
1	6	11405020	Hexagon bolt M5x20 FZB
2	6	17905000	Self-locking nut M5 FZB
3	6	82105900	Chamfered Washer M5 FZB
4	2	M100513	Rubber for skinclamp
5	2	M100514	Tension plate for clamp
6	1	M101672	Base for skinclamp, Left back

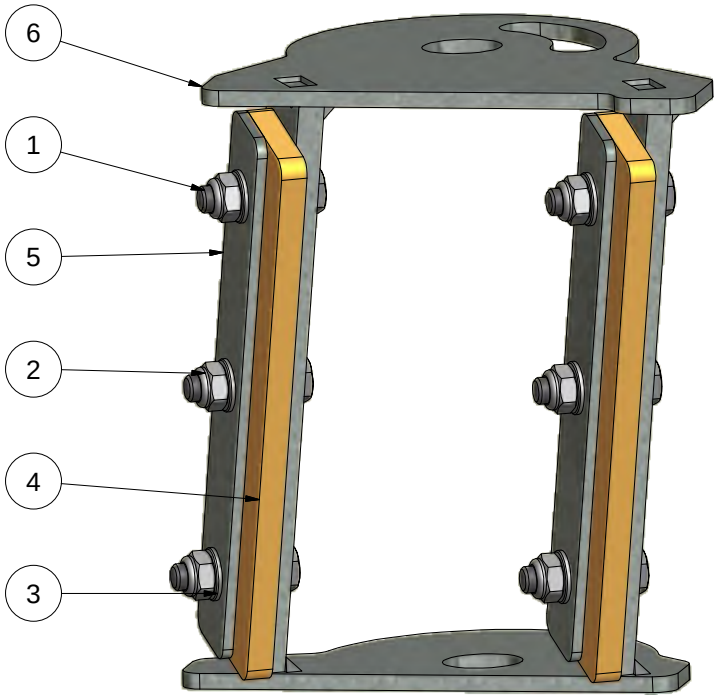

Break all edges

Revision:	Approved	Date:	Revision Description
1	KL	20-01-2016	Made

The document is property of HEDENSTED GRUPPEN A/S and may not be reproduced or disclosed to any third person without the consent of HEDENSTED GRUPPEN A/S

HEDENSTED GRUPPEN	Scale: 1 : 1	Not specificed tolerance according to: DS/ISO 2768-m	Sheet size: A3
		Surface properties: No	Sheet: 1 /1
Part No.: M101674	Material:		
Description 1: Skinclamp for HG10, Left back			
Description 2:			

PARTS LIST			
ITEM	QTY	PART NUMBER	DESCRIPTION
1	12	11405020	Hexagon bolt M5x20 FZB
2	12	17905000	Self-locking nut M5 FZB
3	12	82105900	Chamfered Washer M5 FZB
4	4	M100513	Rubber for skinclamp
5	4	M100514	Tension plate for clamp
6	1	M101719	Base for skinclamp, Left front

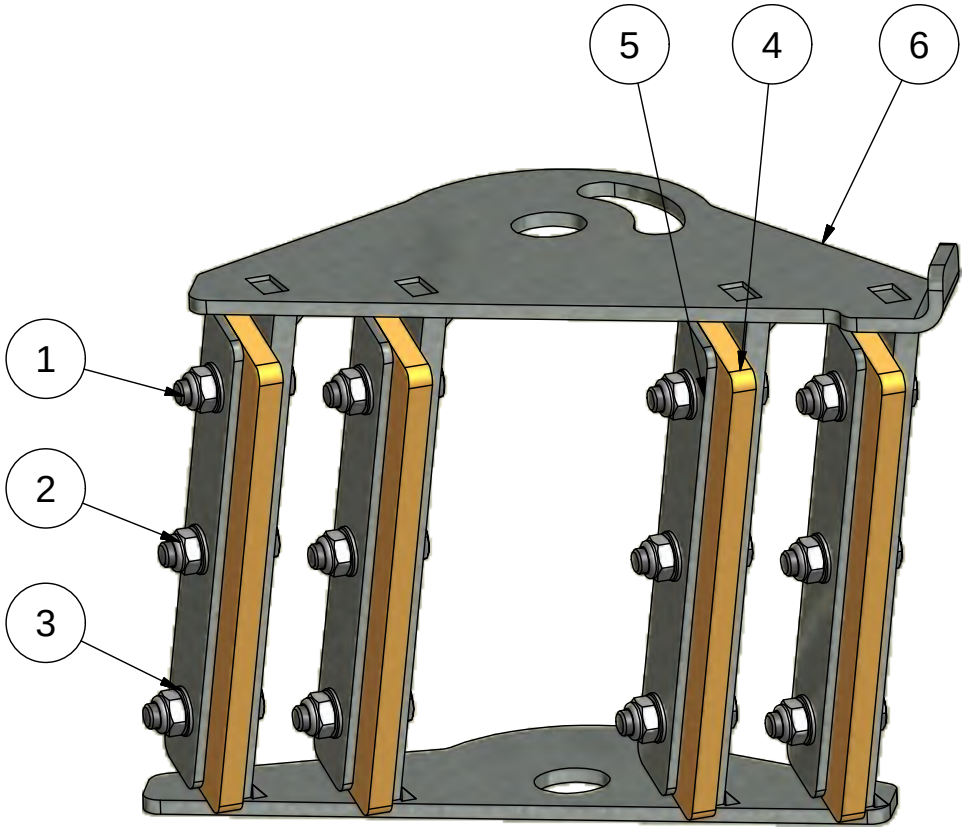

Breake all edges

Revision:	Approved	Date:	Revision Description
1	KL	20-01-2016	Made

This document is strictly confidential and must on no account be copied or disclosed to any third person.
HEDENSTED GRUPPEN A/S

HG HEDENSTED GRUPPEN

Scale: 1 : 1,5	Not specificed tolerance according to: DS/ISO 2768-m		Sheet size: A4
	Surface properties: No		Sheet: 1 /1
Part No.: M101717	Material:		
Description 1: Skinclamp for HG10, Left front			
Description 2:			

PARTS LIST			
ITEM	QTY	PART NUMBER	DESCRIPTION
1	12	11405020	Hexagon bolt M5x20 FZB
2	12	17905000	Self-locking nut M5 FZB
3	12	82105900	Chamfered Washer M5 FZB
4	4	M100513	Rubber for skinclamp
5	4	M100514	Tension plate for clamp
6	1	M101720	Base for skinclamp, Right front

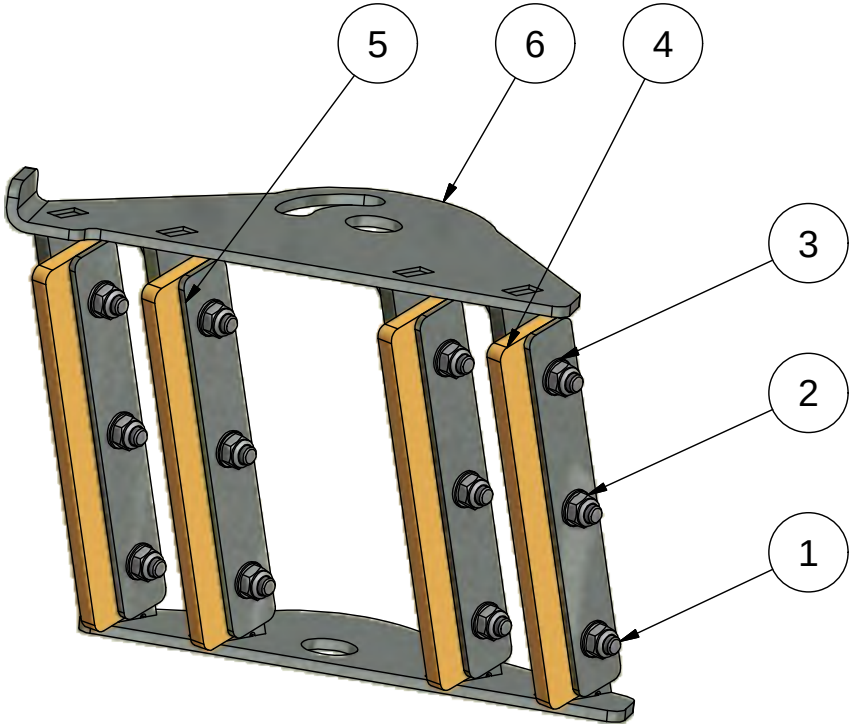

Breake all edges

Revision:	Approved	Date:	Revision Description
1	KL	20-01-2016	Made

This document is strictly confidential and must on no account be copied or disclosed to any third person.
HEDENSTED GRUPPEN A/S

HG HEDENSTED GRUPPEN

Scale: 1 : 2	Not specificed tolerance according to: DS/ISO 2768-m		Sheet size: A4
	Surface properties: No		Sheet: 1 /1
Part No.: M101718	Material:		
Description 1: Skin clamp for HG, Right front			
Description 2:			

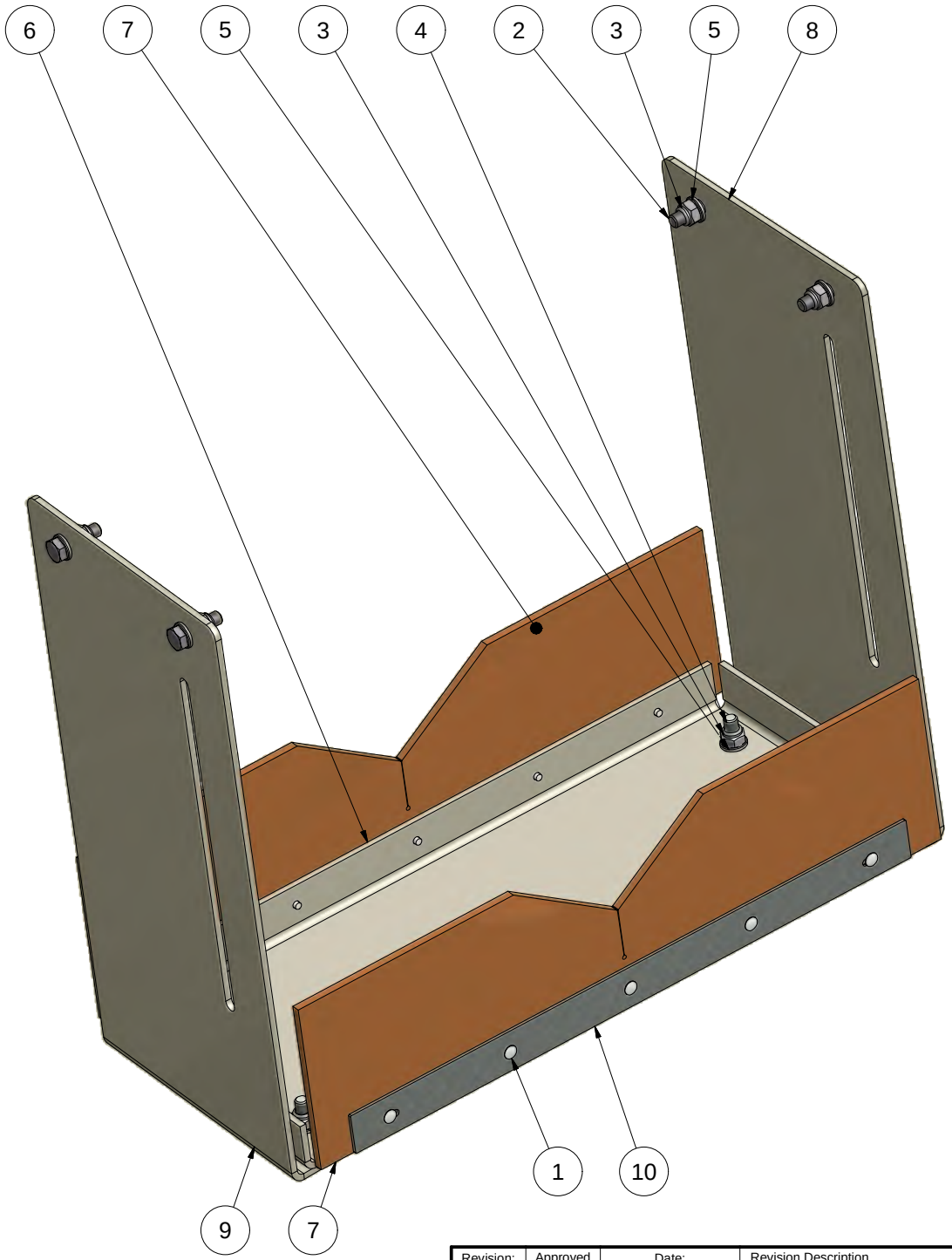

PARTS LIST			
ITEM	QTY	PART NUMBER	DESCRIPTION
1	18	7003212	Blind rivet 3,2x12mm (7,5-9,5)
2	4	11406020	Hexagon bolt M6x20 FZB
3	8	17906000	Self-locking nut M6 FZB
4	4	20406020	Hexagon countersunk head M6x20 FZB
5	12	82106000	Chamfered Washer M6 FZB
6	1	M101712	Bottom plate for sawdust shefl
7	2	M101713	Rubber for sawdust Shelf HG10
8	1	M10711	Sidepanel for Savsmulds hylde
9	1	M10712	Sidepanel for Savsmulds hylde
10	2	M10729	Mounting plate for Rubber

Break all edges

Revision:	Approved	Date:	Revision Description
1	KL	25-01-2016	Made

The document is copyright protected and may on no account be copied or discloses to any third person.

HEDENSTED GRUPPEN A/S

HEDENSTED GRUPPEN

Scale: 1 : 2

Not specificed tolerance according to: DS/ISO 2768-m

Sheet size: A3

Surface properties: No

Sheet: 1 /1

Part No.: M101715

Material:

Description 1: Sawdust shelf for HG 10

Description 2:

A (1 : 2)

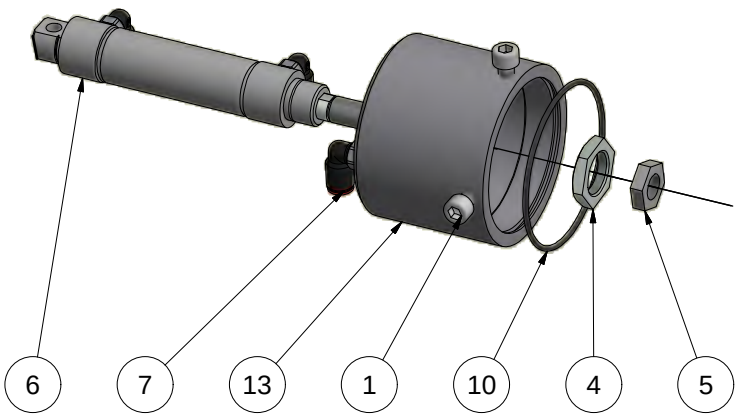

PARTS LIST			
ITEM	QTY	PART NUMBER	DESCRIPTION
1	2	10206010	Hexagon cylinder head M6x10 FZB
2	2	10206025	Hexagon cylinder head M6x25 FZB
3	2	20006014	Hexagon cylinder head low M6x14 FZB
4	1	210424	Lock nut M18x1,5 FZB
5	1	210427	Lock nut M10x1,25 FZB
6	1	211614	Cylinder RT/57225/M/40
7	3	215730	Elbow swirvel Ï 6 x 1/8"t
8	2	425850	Hose elbow Ï 10 x 3/8" Nylon
9	1	477526	Ballofix 3/8" (M/F)
10	1	489024	O-ring NBR 60x2
11	1	M101737	Pushrod for movable pins
12	1	M101739	Beam for HG10
13	1	M102448	Cap for airblow
14	1	M102704	Noseplate movable
15	1	M102705	Nose for beam HG10 - Wide model
16	1	M102706	Movable plate for plate and pins
17	2	M102707	Spike M6/ß4mm for nose

B (1 : 2)

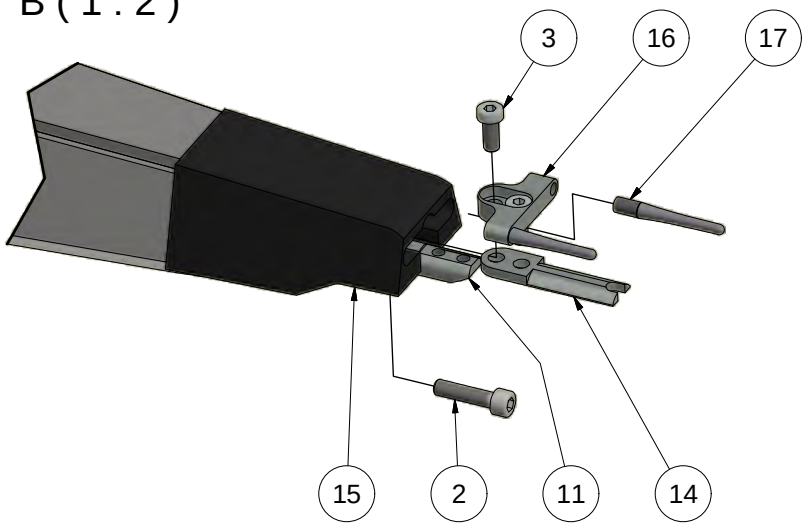

Break all edges

Revision:	Approved	Date:	Revision Description
3	KL	10-05-2017	Nose changed to wide model

The document is property of HEDENSTED GRUPPEN A/S and may not be copied or disclosed to any third person without their consent.

HEDENSTED GRUPPEN

Scale: 1 : 10	Not specificed tolerance according to: DS/ISO 2768-m	Sheet size: A3
	Surface properties: No	Sheet: 1 /1
Part No.: M101741	Material:	
Description 1: Beam HG10, nose assembly		
Description 2:		

PARTS LIST			
ITEM	QTY	PART NUMBER	DESCRIPTION
1	6	11408016	Hexagon bolt M8x16 FZB
2	6	11408030	Hexagon bolt M8x30 FZB
3	12	17908000	Self-locking nut M8 FZB
4	2	215916	Straight connector Ï 10 x female 1/4"
5	2	216797	Filter sintered 1/4"
6	2,0 m	600440	Cable duct metal CF 54_50
7	4	600445	Cable duct U-bracket UC 50-G
8	24	82108000	Washer M8 FZB
9	1	M101757	Air cabinet components - HG10
10	1	M101941	Control cabinet assembly HG10
11	1	M20105	Bracket for control cabinet

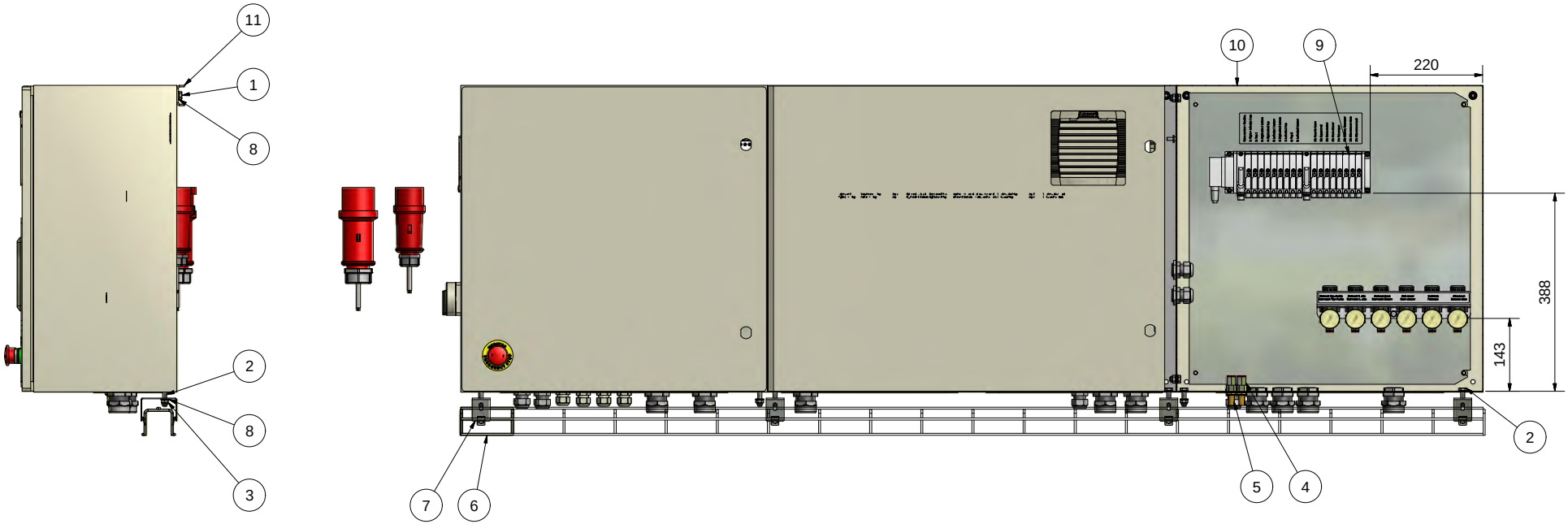

Break all edges

Revision:	Approved	Date:	Revision Description
1	KL	16-02-2016	Made

This drawing is strictly confidential and remains the property of HEDE NSTED GRUPPEN A/S

HEDE NSTED GRUPPEN A/S

Scale: 1 : 6	Not specified tolerance according to: DS/ISO 2768-m	Sheet size: A2
	Surface properties: No	Sheet: 1 /1
Part No.: M101754	Material:	
Description 1: Control cabinet assembly 2		
Description 2:		

PARTS LIST			
ITEM	QTY	PART NUMBER	DESCRIPTION
1	4	10204012	Hexagon cylinder head M4x12 FZB
2	4	82104000	Washer M4 FZB
3	1	M101753	Valveblok AV03 for HG10
4	1	M101756	Regulator assembly HG10
5	3	M102376	Y-connector 2xÏ 8 x Ï 10

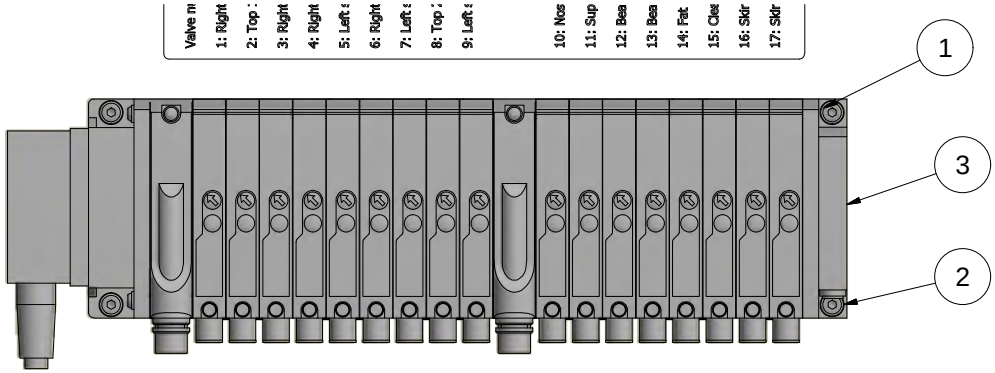

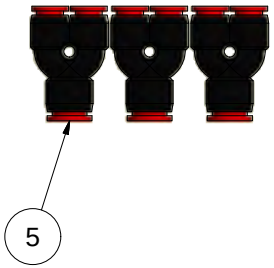

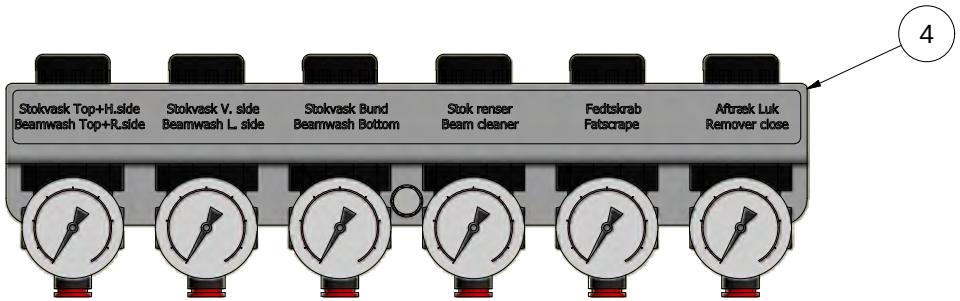

Break all edges

Revision:	Approved	Date:	Revision Description
2	KL	15-12-2016	M102376 added

The document is copyright protected and may on no account be copied or discloses to any third person.

HEDENSTED GRUPPEN A/S

Scale: 1 : 2

Not specificed tolerance according to: DS/ISO 2768-m

Sheet size: A3

Surface properties: No

Sheet: 1 /1

Part No.: M101757

Material:

Description 1: Air cabinet components - HG10

Description 2:

PARTS LIST			
ITEM	QTY	PART NUMBER	DESCRIPTION
1	3	11406010	Hexagon bolt M6x10 FZB
2	6	215112	Banjo with top port 1/8"t x Ï 6 x female 1/8"
3	6	215535	Panel mounting nut
4	6	215550	Gauge 0-10 bar 1/8" Ï 40
5	4	215760	Elbow swirvel Ï 6 x 1/8"
6	6	216206	Regulator 1/8" 0-10bar
7	2	216425	Tee 1/8" x Ï 6 x Ï 6
8	3	82106000	Chamfered Washer M6 FZB
9	1	M101755	Bracket for regulators

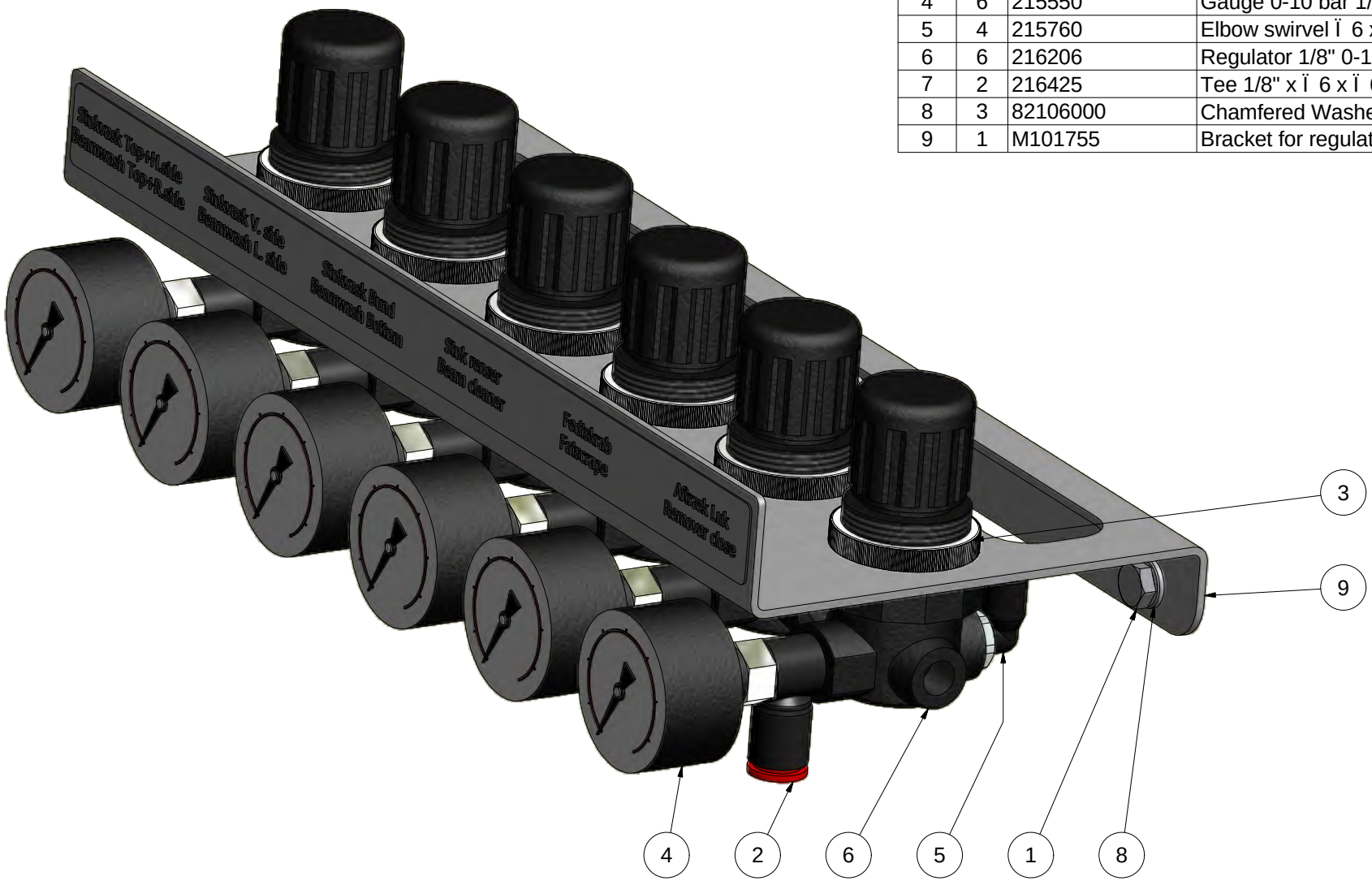

Break all edges

Revision:	Approved	Date:	Revision Description
1	KL	16-02-2016	Made

The document is copyright protected and may not be disclosed to any third person.

HEDENSTED GRUPPEN A/S

Scale: 1 : 1	Not specificed tolerance according to: DS/ISO 2768-m	Sheet size: A3
	Surface properties: No	Sheet: 1 /2
Part No.: M101756	Material:	
Description 1: Regulator assembly HG10		
Description 2:		

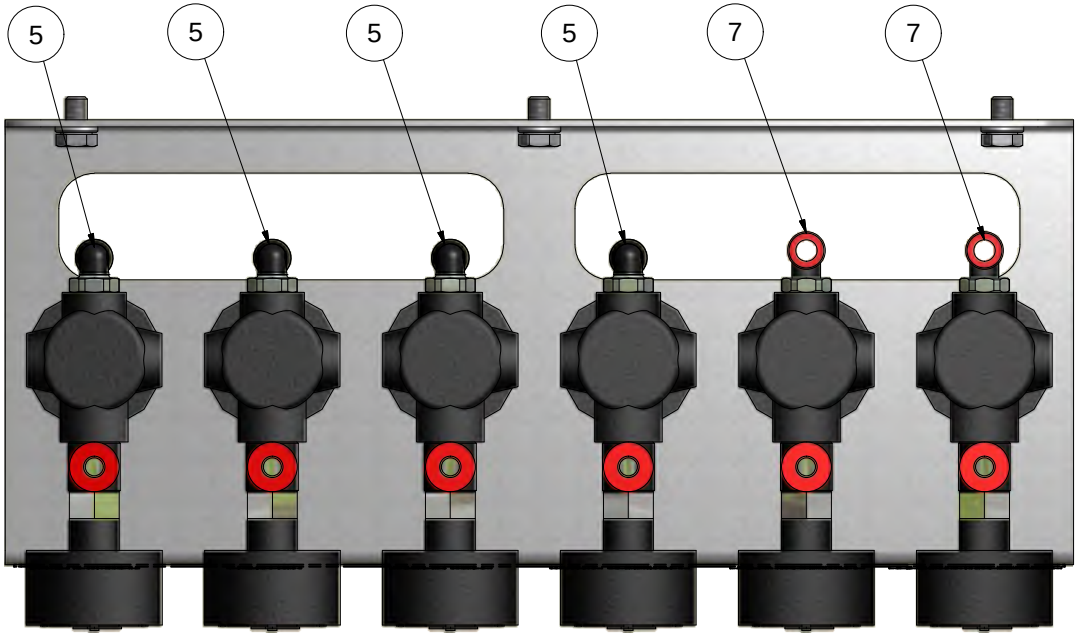

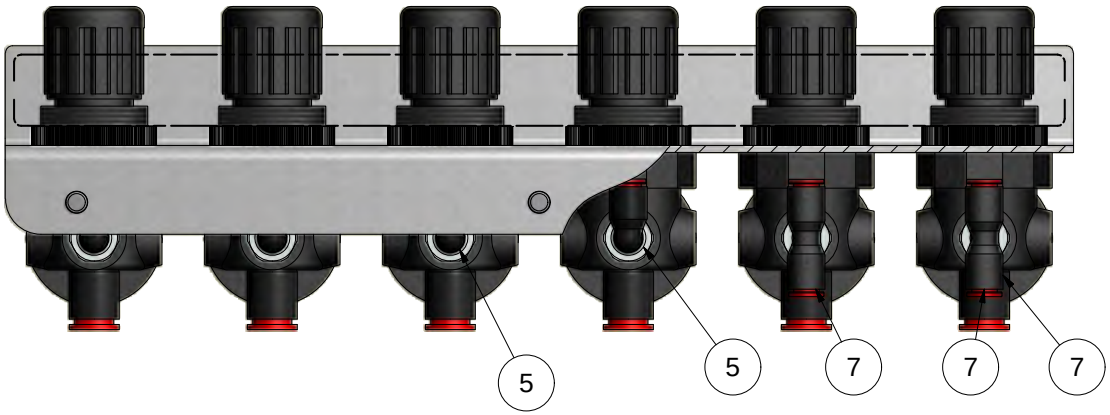

Break all edges

HEDENSTED GRUPPEN	Scale: 1 : 1	Not specificed tolerance according to: DS/ISO 2768-m	Sheet size: A3
		Surface properties: No	Sheet: 2 /2
Part No.: M101756	Material:		
Description 1: Regulator assembly HG10			
Description 2:			

The document is copyright protected and may on no account be copied or discloses to any third person.
HEDENSTED GRUPPEN A/S

Revision:	Approved	Date:	Revision Description
1	KL	16-02-2016	Made

PARTS LIST			
ITEM	QTY	PART NUMBER	DESCRIPTION
1	1	M101742	Control cabinet 1 - HG10
2	1	M101743	Control cabinet 2 - HG10
3	1	M101744	Control cabinet 3 - HG10

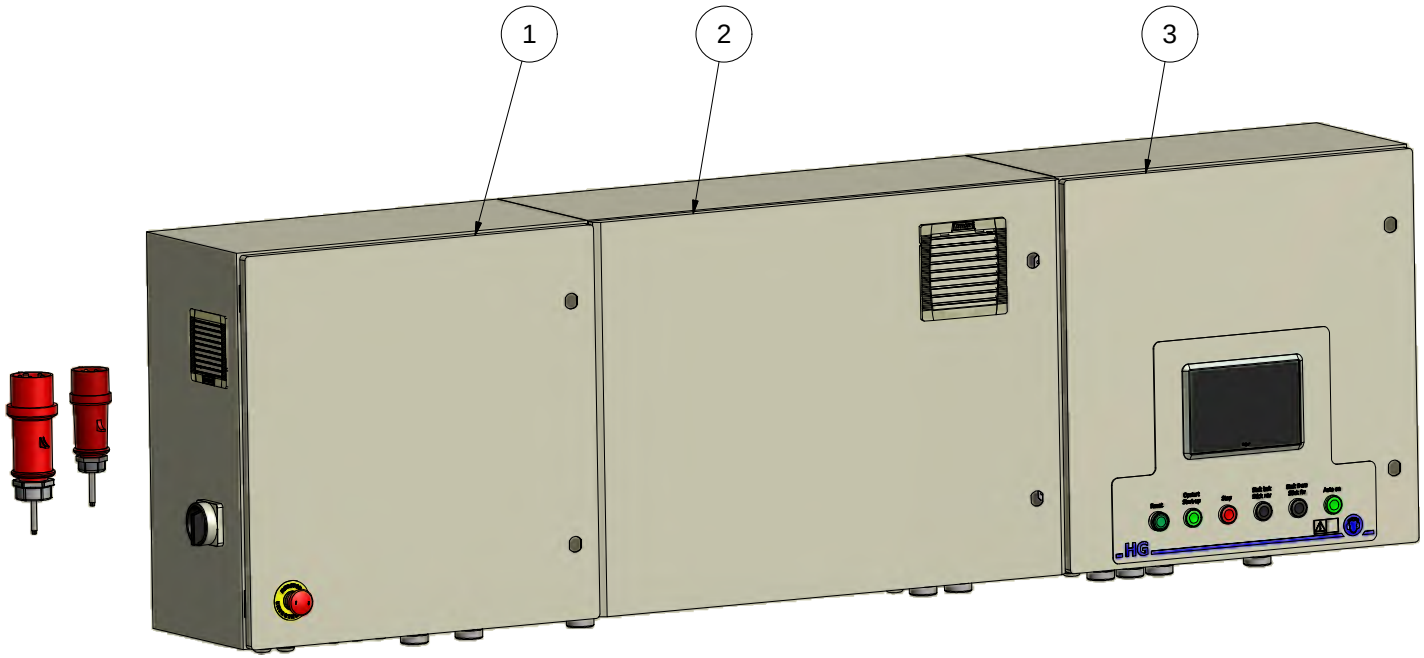

Break all edges

Revision:	Approved	Date:	Revision Description
1	KL	17-02-2016	Made

The document is property of HEDENSTED GRUPPEN A/S and may not be copied or disclosed to any third person without the consent of HEDENSTED GRUPPEN A/S

HEDENSTED GRUPPEN

Scale: 1 : 8	Not specificed tolerance according to: DS/ISO 2768-m	Sheet size: A3
	Surface properties: No	Sheet: 1 /1
Part No.: M101941	Material:	
Description 1: Control cabinet assembly HG10		
Description 2:		

PARTS LIST				PARTS LIST			
ITEM	QTY	PART NUMBER	DESCRIPTION	ITEM	QTY	PART NUMBER	DESCRIPTION
1	1	33820	Eltrical cabinet Assembly	19	1	600555	End plate WAP 2,5-10
2	1	50171	CEE Plug male 5P/16A/400V Phase inverter	20	15	600585	Terminal block WPE 2,5
3	1	50184	CEE Plug male 5P/32A/400V	21	2	600590	End bracket EW 35
4	1	600100	Push button Emergency stop	22	5,0 m	600640	Cable JZ 5x2,5mmĮ PVC
5	1	600230	Main switch 40A 8-pole	23	5,0 m	601012	Cable JZ 5x6,0mmĮ PVC
6	1	600280	Additional Switch GVAE11	24	1	601035	Automatic fuse 16A C 1P+N
7	2	600282	Contactor LP1K0901B 9A 3NO-1NC	25	1	601095	Automatic fuse 10A C 1P+N
8	1	600307	Box metal 600x600x300	26	2	601100	Automatic fuse16A C 3P+N
9	1	600375	Switch block ZB4BZ104 2NC	27	4	601102	Contactor 3x 440V 18A 24v DC
10	2	600428	Gasket Multihole M32 4x Ï 10	28	2	601107	Contactor 3x 440V 32A 24VDC
11	1	600429	Gasket Multihole M32 7x Ï 7	29	1	601334	Exhaust filter for controlebox
12	6	600455	Cabel gland M20 Ï 5-12	30	1	875101	Motor protection 2,5-4,0A
13	2	600465	Cable gland M25 Ï 7-14	31	1	M101746	Freq. inverter 0,37kW 1x230V Emerson
14	3	600466	Cabel gland M32 Ï 15-24,5	32	1	M101747	Low Leak filter for M200-01
15	6	600475	Cable gland nut polyamid M20	33	1	M101748	Freq. inverter 3.0kW 3x400V Emerson
16	2	600480	Cable gland nut polyamid M25	34	1	M101749	Low Leak filter for M200-03
17	3	600481	Cable gland nut polyamid M32	35	1	M101750	Breake resistance for M200-034 00073A
18	48	600550	Terminal block WDU_2,5				

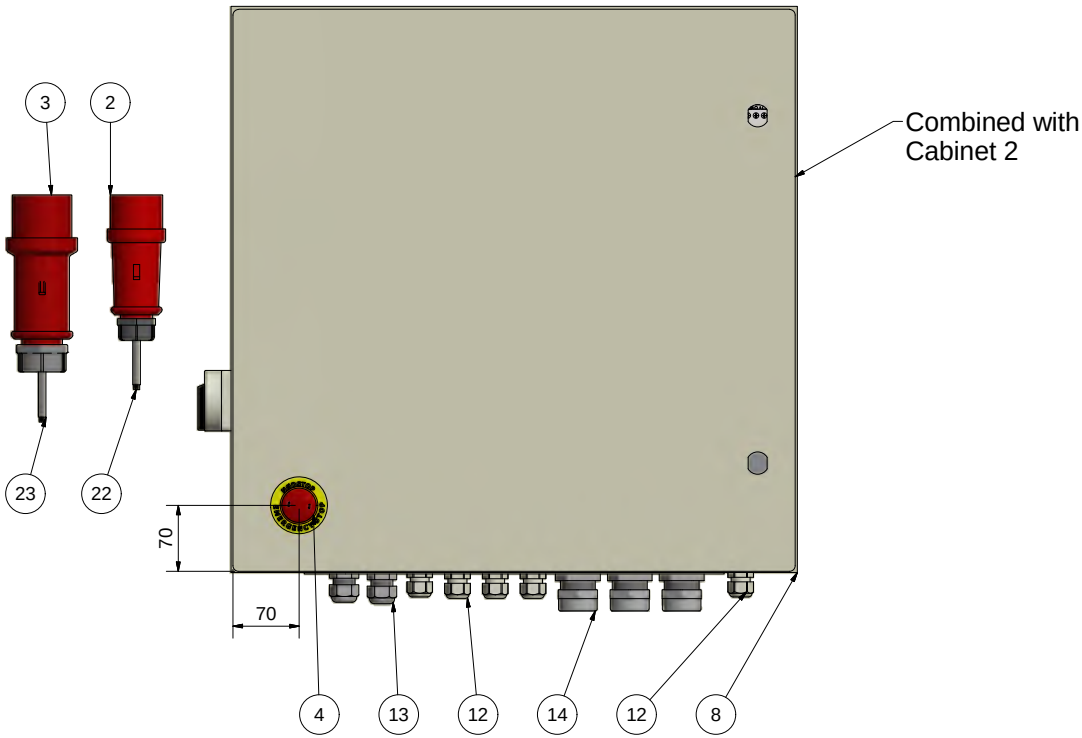

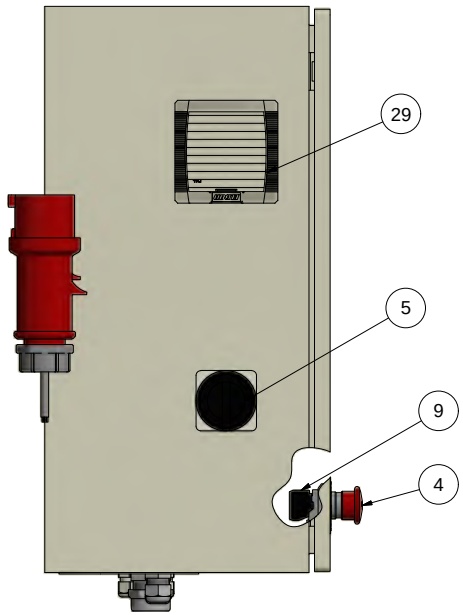

Break all edges

Revision:	Approved	Date:	Revision Description
3	KKS	21-06-2017	Part List Update

This drawing is strictly confidential and must not be copied or disclosed to third parties without written consent of HEDENSTED GRUPPEN A/S

HEDENSTED GRUPPEN

Scale: 1 : 4	Not specified tolerance according to: DS/ISO 2768-m	Sheet size: A2
	Surface properties: No	Sheet: 1 /4
Part No.: M101742	Material:	
Description 1: Control cabinet 1 - HG10		
Description 2:		

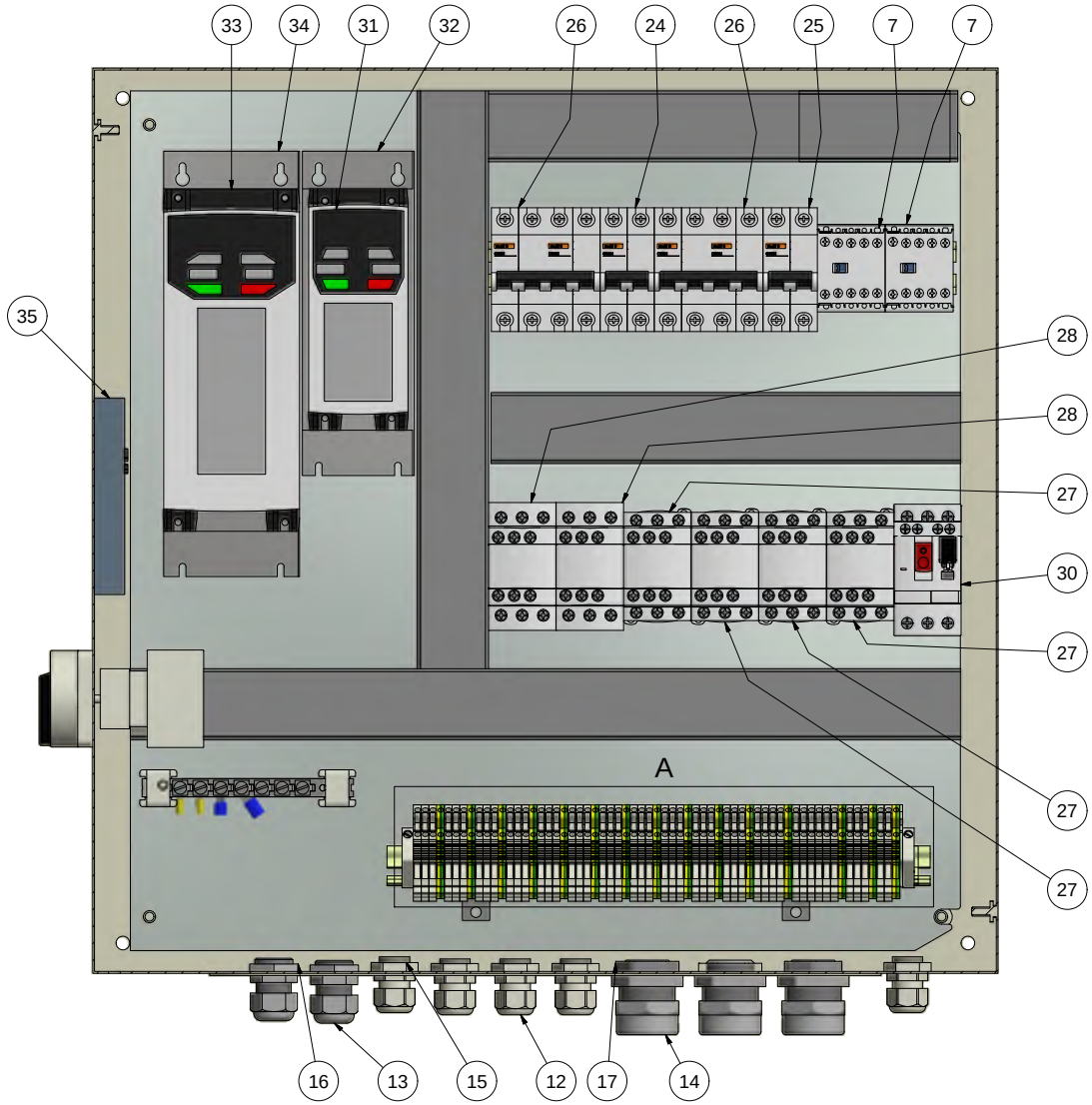

A (0,80 : 1)

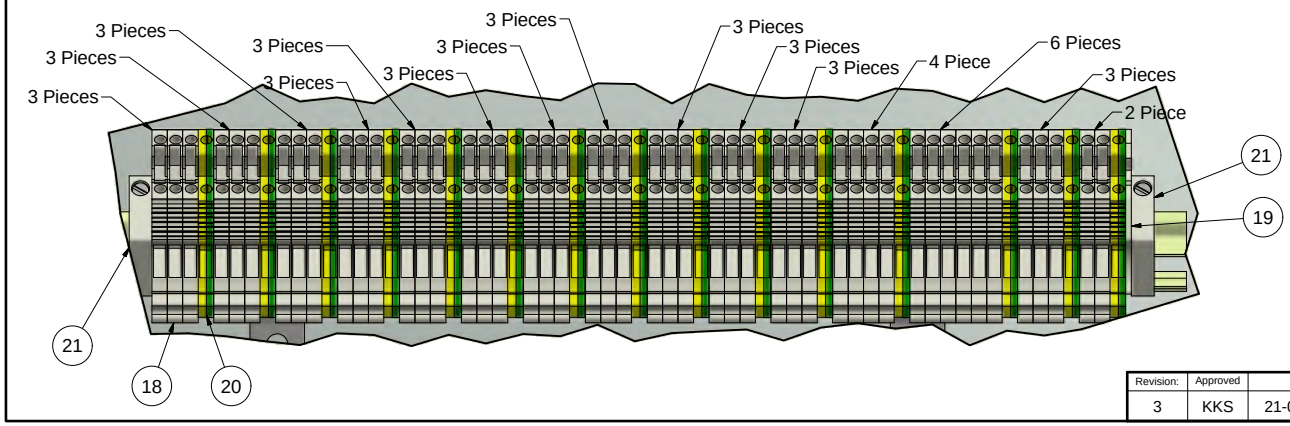

Break all edges

Revision:	Approved	Date:	Revision Description
3	KKS	21-06-2017	Part List Update

This drawing is strictly confidential and must not be copied or disclosed to third parties without written consent of HEDENSTED GRUPPEN A/S

HG HEDENSTED GRUPPEN	Scale: 1 : 4	Not specified tolerance according to: DS/ISO 2768-m	Sheet size: A2
		Surface properties: No	Sheet: 2 /4
Part No.: M101742	Material:		
Description 1: Control cabinet 1 - HG10			
Description 2:			

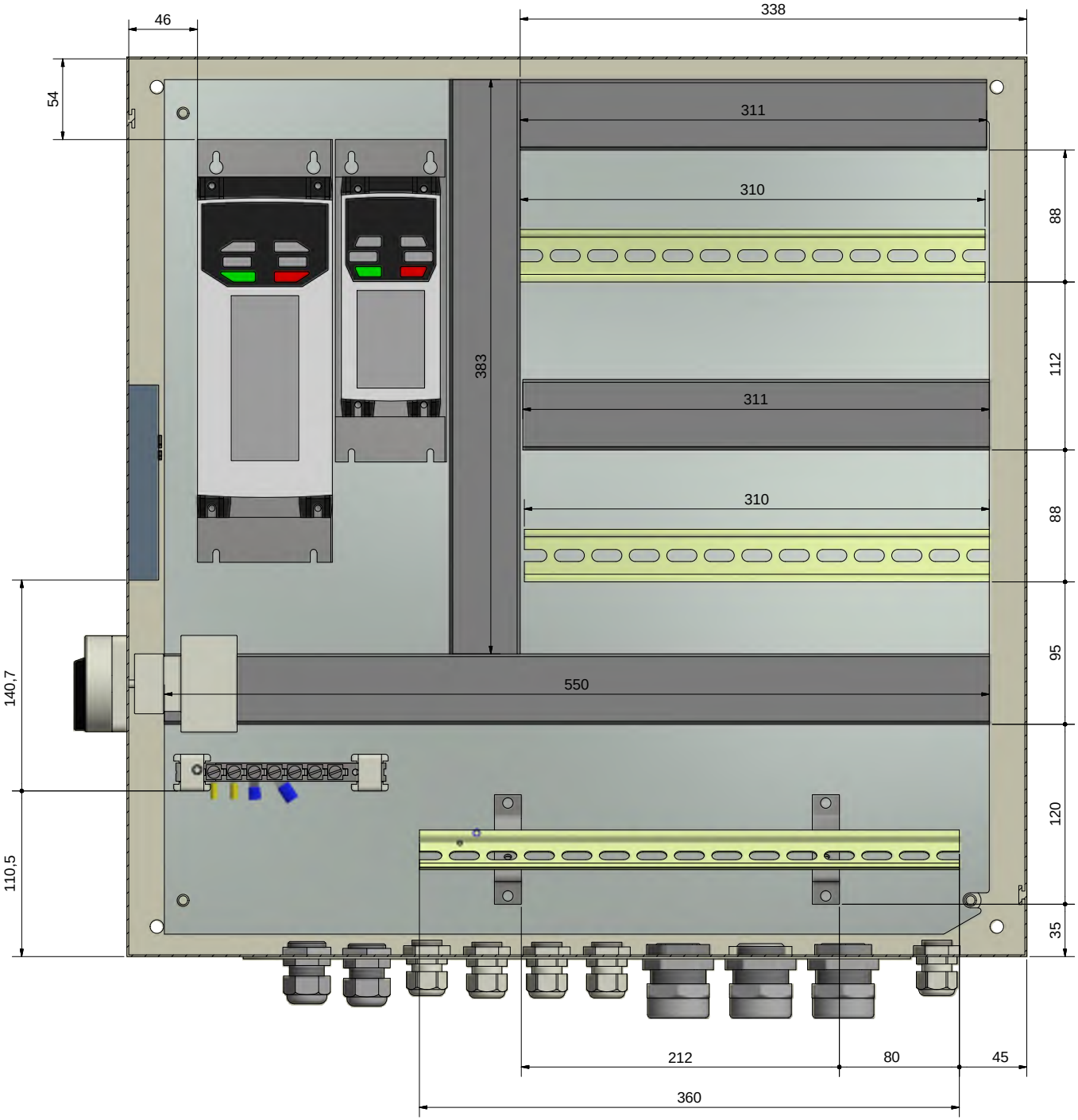

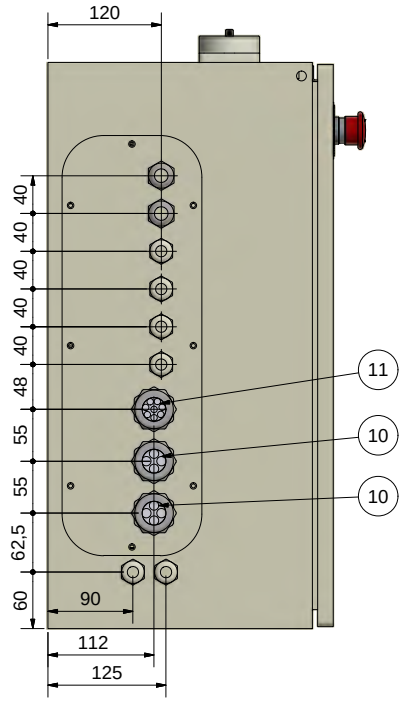

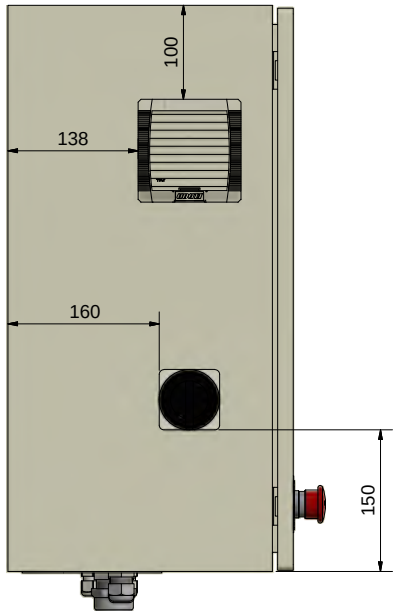

Break all edges

Revision:	Approved	Date:	Revision Description
3	KKS	21-06-2017	Part List Update

This drawing is strictly confidential and must not be copied or disclosed to third parties without written consent of HEDE NSTED GRUPPEN A/S

HG HEDENSTED GRUPPEN

Scale: 1 : 4	Not specified tolerance according to: DS/ISO 2768-m	Sheet size: A2
	Surface properties: No	Sheet: 3 /4
Part No.: M101742	Material:	
Description 1: Control cabinet 1 - HG10		
Description 2:		

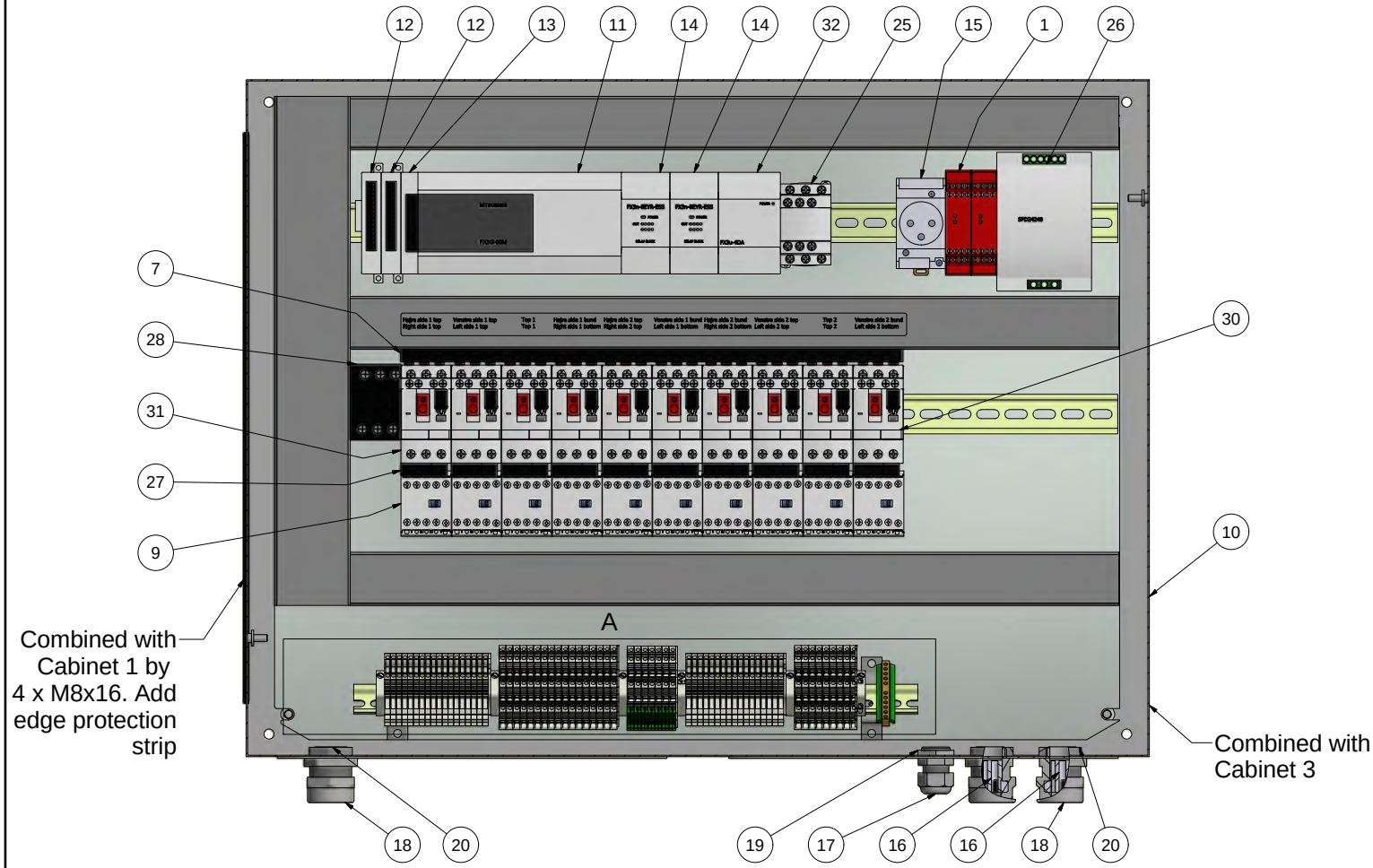

PARTS LIST			
ITEM	QTY	PART NUMBER	DESCRIPTION
1	2	206731	Safety controller 24VAC/DC Cat3
2	7	600105	Terminal block DLD 2,5 PE
3	26	600112	Terminal block DLD 2.5/35
4	1	600114	End plate AP-DLD 2,5/PE
5	2	600125	End plate AP-DLD nr 131766
6	7	600130	Cross connector Q10 no131310
7	4	600132	Busbar 3Pol 4Tap GV2 G445
8	10	600280	Additional Switch GVAE11
9	10	600282	Contactor LP1K0901B 9A 3NO-1NC
10	1	600297	Box metal 800x600x300
11	1	600311	PLC Mitsubishi, FX3G-60MR/ES
12	2	600407	PLC ext. module, 4 analog out, FX3U-4DA-ADP
13	1	600409	PLC Adaptor ADP for FX, FX3G-CNV-ADP
14	2	600413	PLC ext. module, 8 relay out, FX2N-8EYR-ES/UL
15	1	600420	Socket for DIN rail 3P/16A/240V
16	3	600423	Gasket Multihole M32 10x Ï 6
17	1	600465	Cable gland M25 Ï 7-14
18	3	600466	Cabel gland M32 Ï 15-24,5
19	1	600480	Cable gland nut polyamid M25
20	3	600481	Cable gland nut polyamid M32
21	35	600550	Terminal block WDU_2,5
22	2	600555	End plate WAP 2,5-10
23	6	600590	End bracket EW 35
24	1	600665	Terminal block PE KM11E
25	1	601105	Contactor LC1D18P7 18A 230VAC
26	1	601277	Power supply 1P 24V 10A
27	10	601322	Combi blok GV2AF01
28	1	601325	Clamp GV2G05 for power connect
29	1	601332	Fan with filter 230V
30	8	875102	Motor protection 4,0-6,3A
31	2	875103	Motor protection 6-10A
32	1	M101751	PLC ext. module, 4 analog out, FX3U-4DA

A (0,80 : 1)

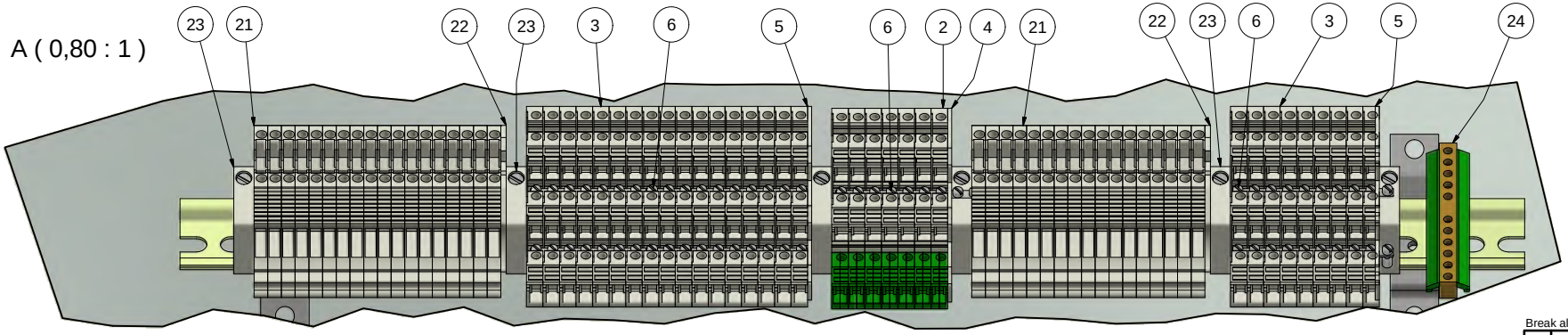

Break all edges

Revision:	Approved	Date:	Revision Description
3	KKS	22-06-2017	Part List Updated

This drawing is strictly confidential and must not be copied or disclosed to third parties without written consent of HEDENSTED GRUPPEN A/S

HG HEDENSTED GRUPPEN

Scale: 1 : 3	Not specified tolerance according to: DS/ISO 2768-m	Sheet size: A2
	Surface properties: No	Sheet: 1 /3
Part No.: M101743	Material:	
Description 1: Control cabinet 2 - HG10		
Description 2:		

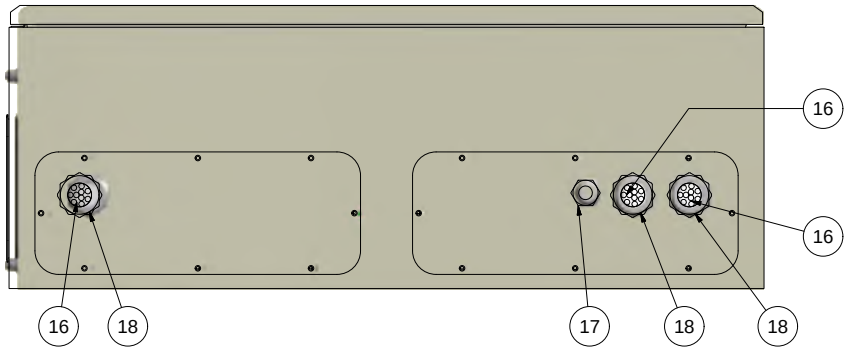

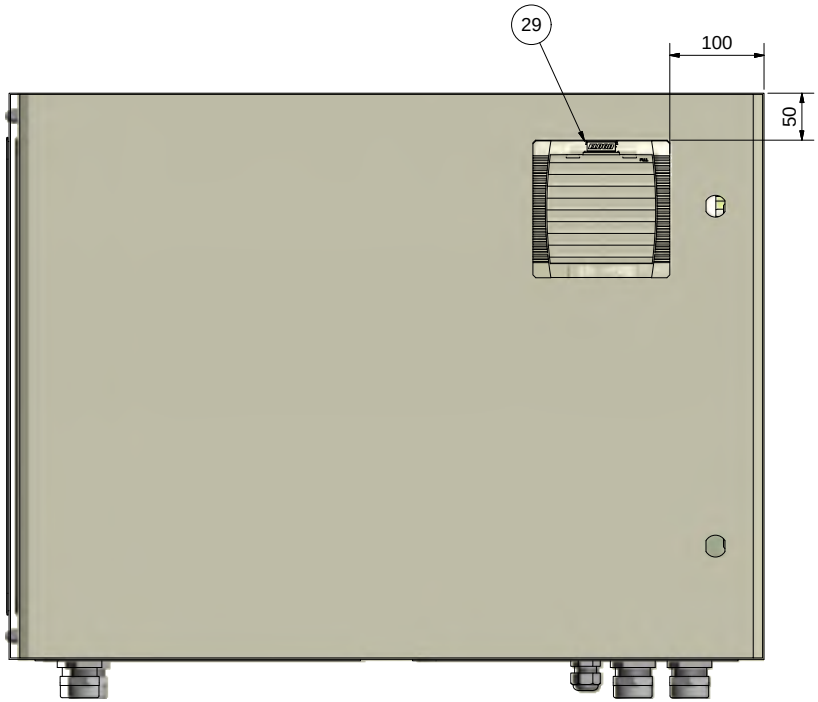

Break all edges

HG HEDENSTED GRUPPEN	Scale: 1 : 3	Not specified tolerance according to: DS/ISO 2768-m	Sheet size: A2
		Surface properties: No	Sheet: 3 /3
Part No.: M101743		Material:	
Description 1: Control cabinet 2 - HG10			
Description 2:			

This drawing is the property and intellectual property of HEDENSTED GRUPPEN A/S

Revision:	Approved	Date:	Revision Description
3	KKS	22-06-2017	Part List Updated

PARTS LIST			
ITEM	QTY	PART NUMBER	DESCRIPTION
1	1	600075	Switch element 1NO ZBE101
2	1	600307	Box metal 600x600x300
3	1	600345	Push button red 1NC XB4BA42
4	1	600350	Push button green/light 1NO+1NC XB4BW33B5
5	1	600356	Light 24VAC/DC Green XB4BVB3
6	1	600367	Cabel for T-series HMI, CAB103/3M
7	4	600423	Gasket Multihole M32 10x Ï 6
8	3	600465	Cable gland M25 Ï 7-14
9	4	600466	Cabel gland M32 Ï 15-24,5
10	3	600480	Cable gland nut polyamid M25
11	4	600481	Cable gland nut polyamid M32
12	2	600786	Push button black 1NO XB4BA21
13	1	600788	Push button green 1NO XB4BA31
14	1	600926	Panel, touch 7" X2 Base 7 - F2
15	1	M201061	Label for fleshing 8 roll

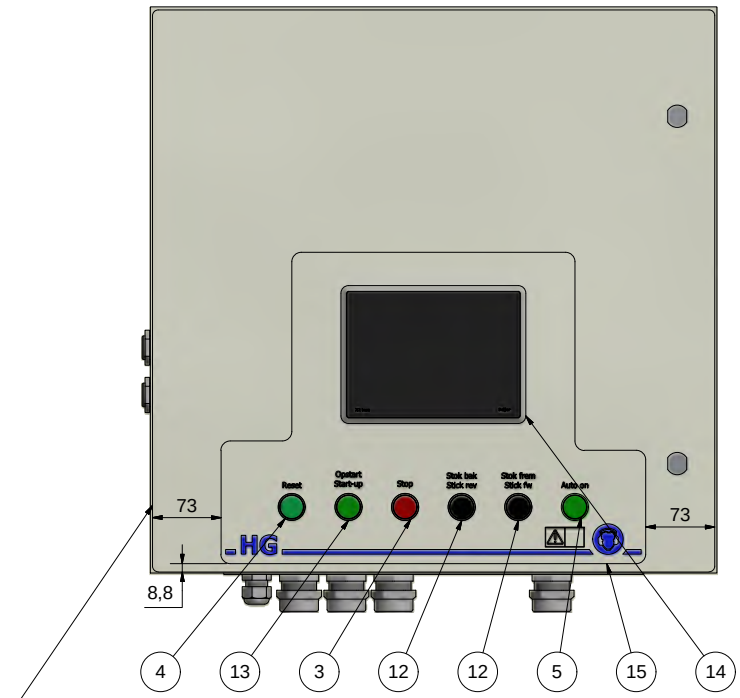

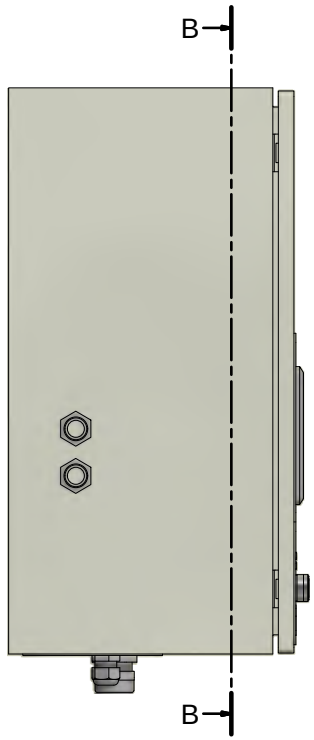

B-B (1 : 4)

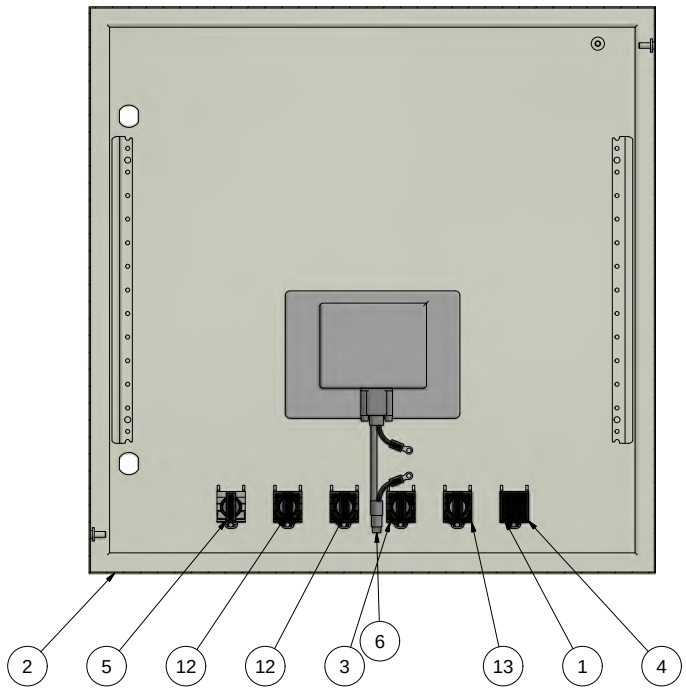

Break all edges

Revision:	Approved	Date:	Revision Description
3	KKS	22-06-2017	Part List Updated

This drawing is strictly confidential and must not be reproduced or disclosed to third parties without written consent of HEDE NSTED GRUPPEN A/S

HG HEDENSTED GRUPPEN	Scale: 1 : 4	Not specified tolerance according to: DS/ISO 2768-m	Sheet size: A2
		Surface properties: No	Sheet: 1 /2
Part No.: M101744	Material:		
Description 1: Control cabinet 3 - HG10			
Description 2:			

C (1 : 3)

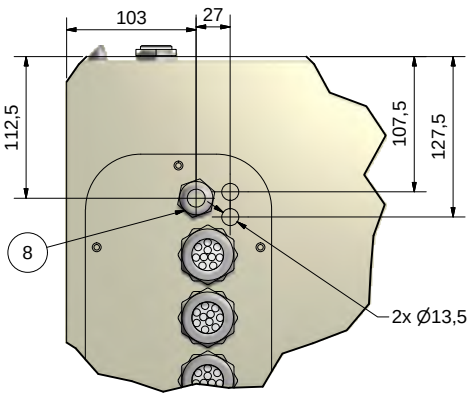

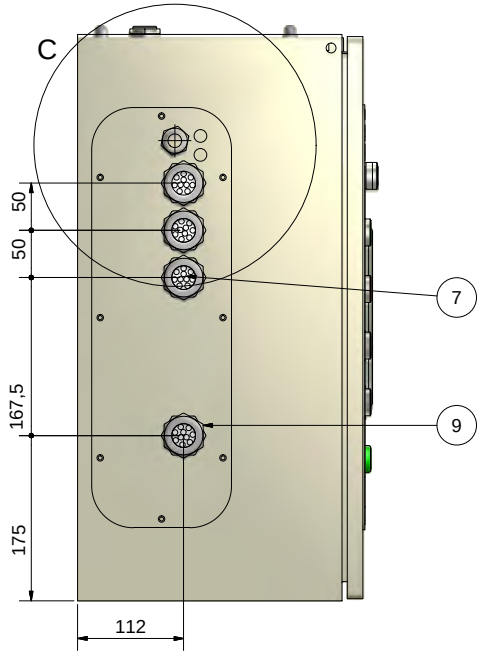

Combined with
Cabinet 2

A-A (1 : 4)

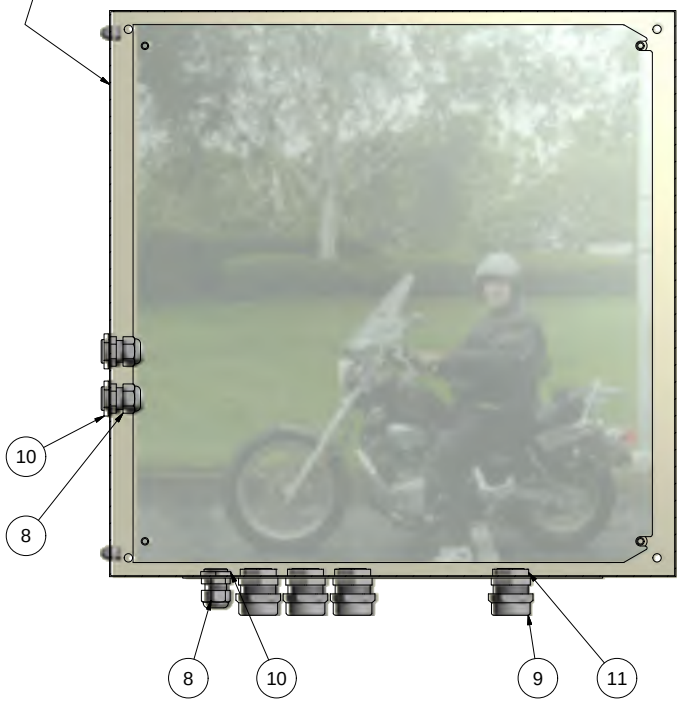

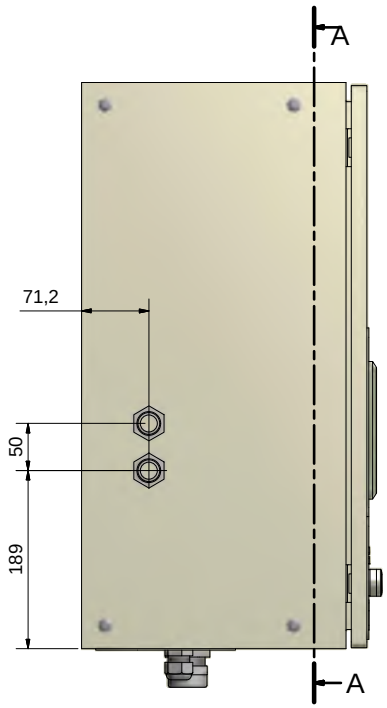

Break all edges

Scale: 1 : 4	Not specified tolerance according to: DS/ISO 2768-m		Sheet size: A2
	Surface properties: No		Sheet: 2 /2
Part No.: M101744	Material:		
Description 1: Control cabinet 3 - HG10			
Description 2:			

This drawing is strictly confidential and shall not be copied or disclosed to third parties without written consent of HEDEGNSTED GRUPPEN A/S

Revision:	Approved	Date:	Revision Description
3	KKS	22-06-2017	Part List Updated

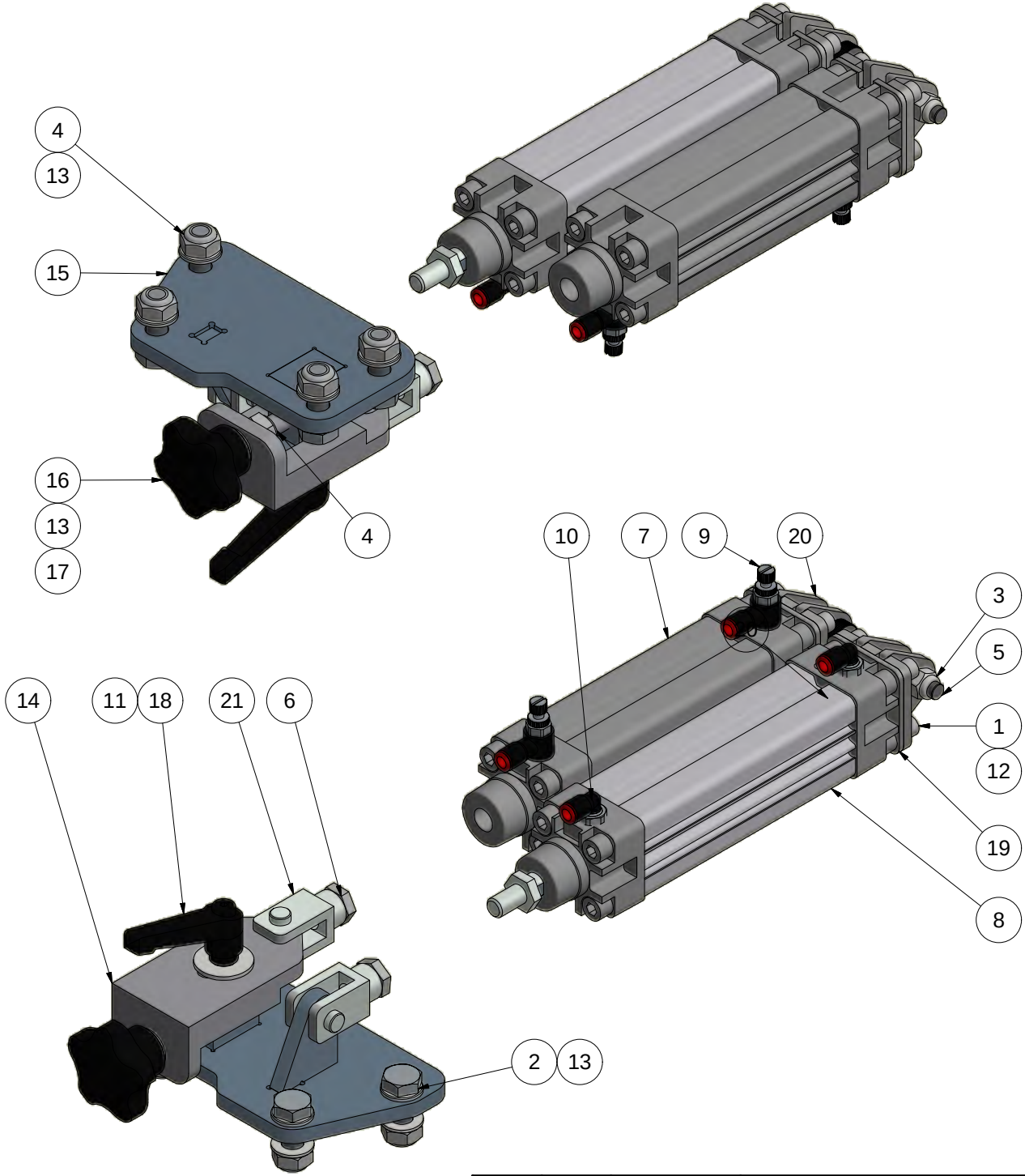

PARTS LIST			
ITEM	QTY	PART NUMBER	DESCRIPTION
1	8	10206020	Hexagon cylinder head M6x20 FZB
2	4	11410030	Hexagon bolt M10x30 FZB
3	2	17908000	Self-locking nut M8 FZB
4	5	17910000	Self-locking nut M10 FZB
5	2	20208020	Fitting bolt M8-10x20
6	2	210427	Lock nut M10x1,25 FZB
7	1	212090	Cylinder PRA/182032/M/80
8	1	212092	Cylinder PRA/182032/M/100
9	2	215105	Flow banjo control Ï 6 x 1/8"
10	2	215760	Elbow swirvel Ï 6 x 1/8"
11	1	4811028	Washer SRKB Ï 11x28x2 FZB
12	8	82106000	Washer M6 FZB
13	10	82110000	Washer M10 FZB
14	1	M101786	Mount Base For Cylinder
15	1	M101789	Mount for Cylinder
16	1	M101798	Adjustment screw M10 x 50mm
17	1	M101802	Bushing for Adjustment Screw
18	1	M101989	Handle, adjustable 63 x M10 - 20mm (M)
19	2	M102780	Spacer Plate for Cylinder Ï 32
20	2	M102781	Mounting Bracket Cyl Ï 32
21	2	M102782	F-Bracket QM/8025/25 for Buttom roll

Break all edges

Revision:	Approved	Date:	Revision Description
3	KKS	23-06-2017	Cylinder turned upside-down

The document is property of HEDENSTED GRUPPEN A/S and may on no account be copied or discloses to any third person.

HEDENSTED GRUPPEN

Scale: 1 : 2	Not specificed tolerance according to: DS/ISO 2768-m	Sheet size: A3
	Surface properties: No	Sheet: 1 /1
Part No.: M101818	Material:	
Description 1: Cylinder mount assembly 1		
Description 2: RS1B + RS2B		

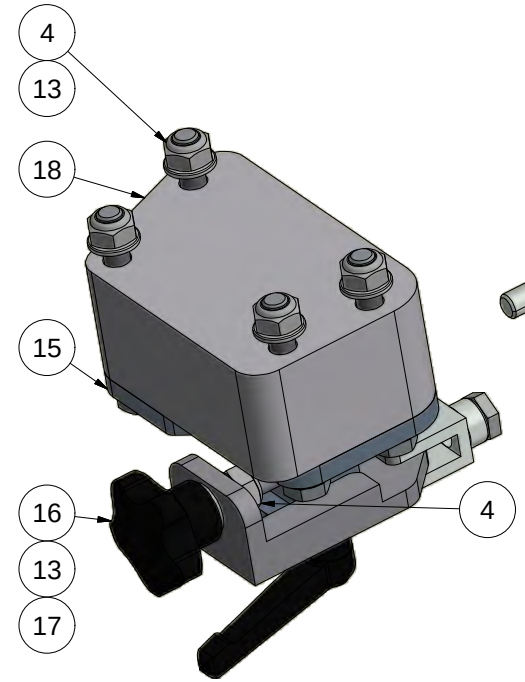

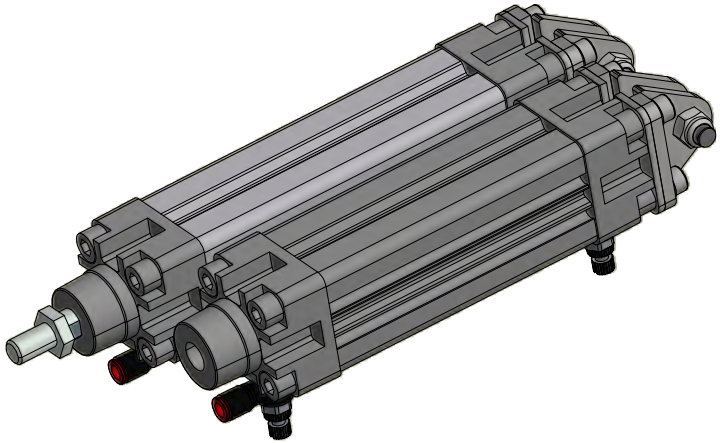

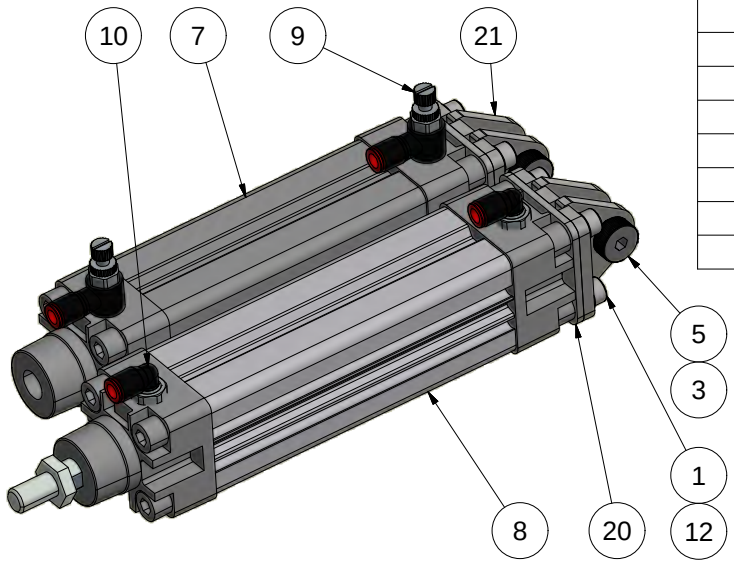

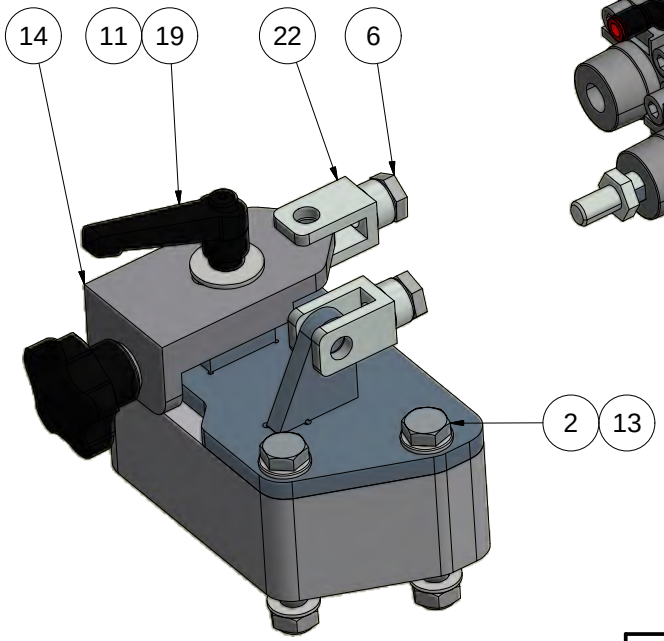

PARTS LIST

ITEM	QTY	PART NUMBER	DESCRIPTION
1	8	10206020	Hexagon cylinder head M6x20 FZB
2	4	11110080	Hexagon bolt M10x80 FZB
3	2	17908000	Self-locking nut M8 FZB
4	5	17910000	Self-locking nut M10 FZB
5	2	20208020	Fitting bolt M8-10x20
6	2	210427	Lock nut M10x1,25 FZB
7	1	212090	Cylinder PRA/182032/M/80
8	1	212092	Cylinder PRA/182032/M/100
9	2	215105	Flow banjo control Ï 6 x 1/8"
10	2	215760	Elbow swirvel Ï 6 x 1/8"
11	1	4811028	Washer SRKB Ï 11x28x2 FZB
12	8	82106000	Washer M6 FZB
13	10	82110000	Washer M10 FZB
14	1	M101786	Mount Base For Cylinder
15	1	M101789	Mount for Cylinder
16	1	M101798	Adjustment screw M10 x 50mm
17	1	M101802	Bushing for Adjustment Screw
18	1	M101821	Distance Block for Cyl Mount
19	1	M101989	Handle, adjustable 63 x M10 - 20mm (M)
20	2	M102780	Spacer Plate for Cylinder Ï 32
21	2	M102781	Mounting Bracket Cyl Ï 32
22	2	M102782	F-Bracket QM/8025/25 for Buttom roll

Break all edges

Revision:	Approved	Date:	Revision Description
3	KKS	23-06-2017	Cylinder turned upside-down

The document is property of HEDENSTED GRUPPEN A/S and may not be reproduced or disclosed to any third person without their consent.

HEDENSTED GRUPPEN

Scale: 1 : 2	Not specificed tolerance according to: DS/ISO 2768-m	Sheet size: A3
	Surface properties: No	Sheet: 1 /1
Part No.: M101819	Material:	
Description 1: Cylinder mount assembly 7		
Description 2: LS2B		

PARTS LIST			
ITEM	QTY	PART NUMBER	DESCRIPTION
1	2	10203016	Hexagon cylinder head M3x16 FZB
2	3	10203030	Hexagon cylinder head M3x30 FZB
3	6	10205016	Hexagon cylinder head M5x16 FZB
4	12	11410035	Hexagon bolt M10x35 FZB
5	2	11412035	Hexagon bolt M12x35 FZB
6	6	17905000	Self-locking nut M5 FZB
7	12	17910000	Self-locking nut M10 FZB
8	2	17912000	Self-locking nut M12 FZB
9	2	215850	Tee Ï 6 x Ï 6 x Ï 6
10	2	215860	Y-connector 2xÏ 6 x Ï 6
11	1	216748	Plug Ï 6 mm
12	5	82103000	Washer M3 FZB
13	6	82105900	Washer M5 FZB
14	24	82110000	Washer M10 FZB
15	4	82112000	Washer M12 FZB
16	1	M101778	Beam Scraping Base Plate
17	1	M101814	Bracket Beam Scraping Bottom
18	1	M101815	Bracket Front Scraping Lock
19	1	M101816	Bracket Beam Scraping Top
20	1	M101959	Beam scrapert Left Top
21	1	M101960	Beam scraper Right Top
22	1	M101961	Beam scraper Top
23	1	M200203	Latch clamp GN 851-160-T2
24	1	M201140	Manifold Ï 6 x 3xÏ 4 x Ï 6

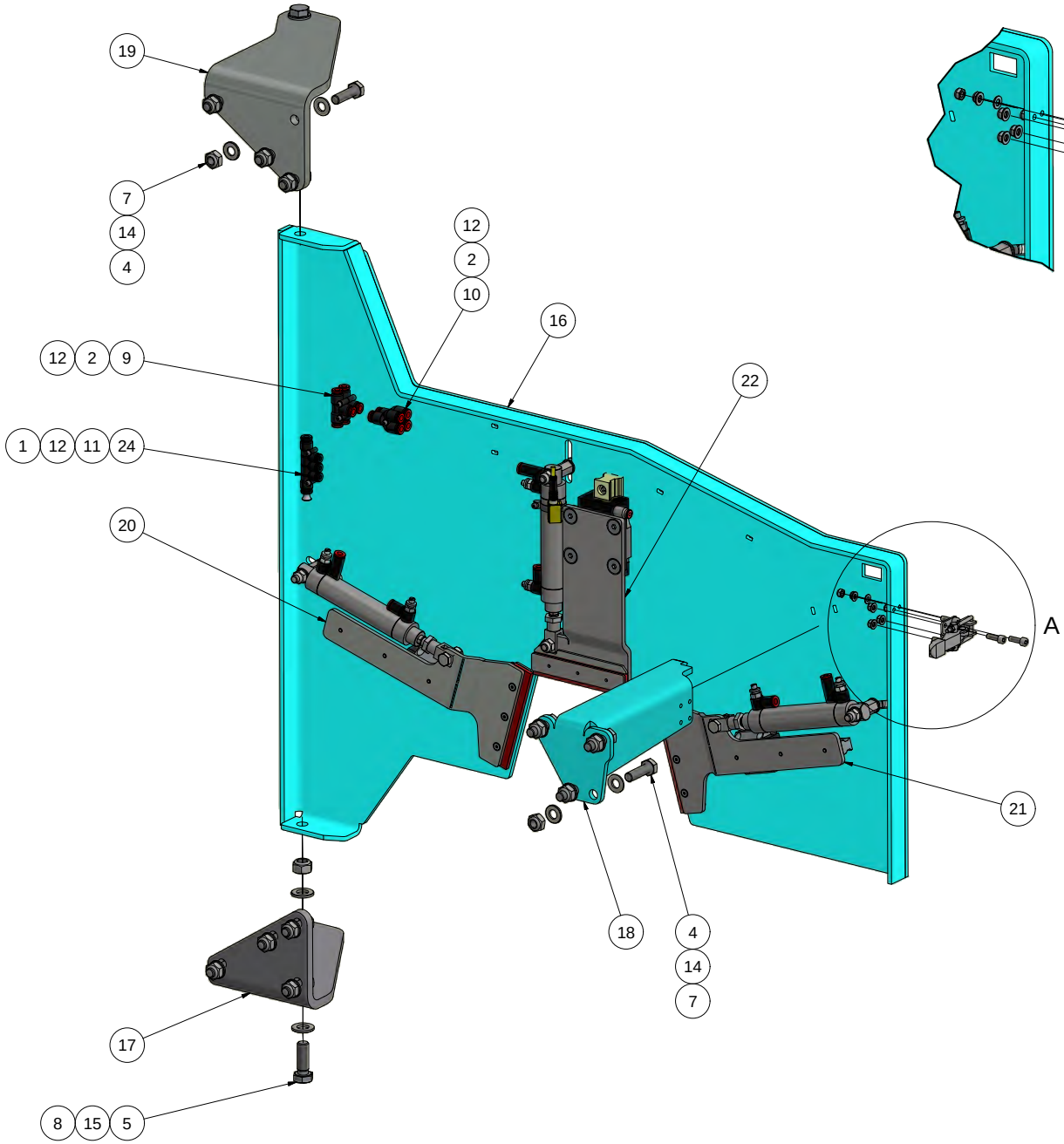

A (1:2,5)

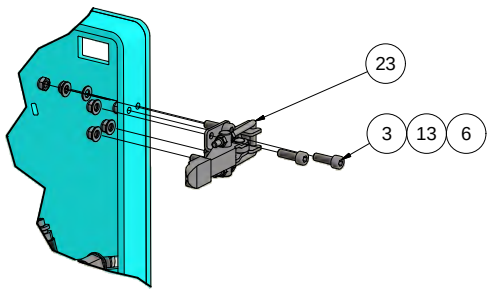

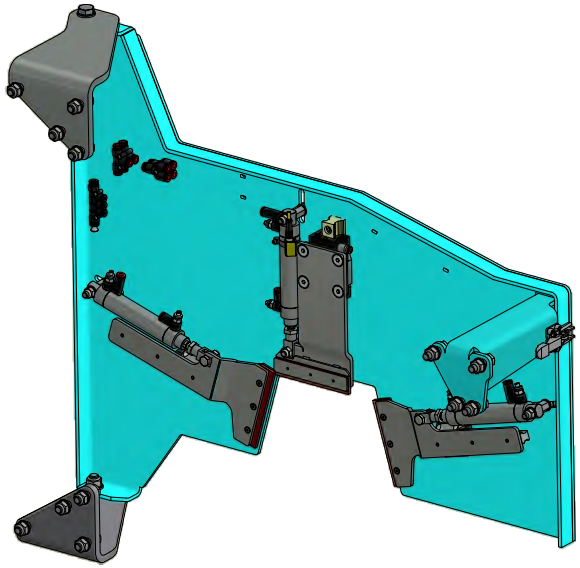

Break all edges

Revision:	Approved	Date:	Revision Description
1	MBO	09-02-2016	Made

This drawing is the property of HEDE NSTED GRUPPEN A/S. Reproduction or disclosure to third parties without written consent is prohibited.

HEDE NSTED GRUPPEN A/S

Scale: 1:3,5	Not specified tolerance according to: DS/ISO 2768-m	Sheet size: A2
	Surface properties: No	Sheet: 1 /1
Part No.: M101822	Material:	
Description 1: Beam scraper		
Description 2:		

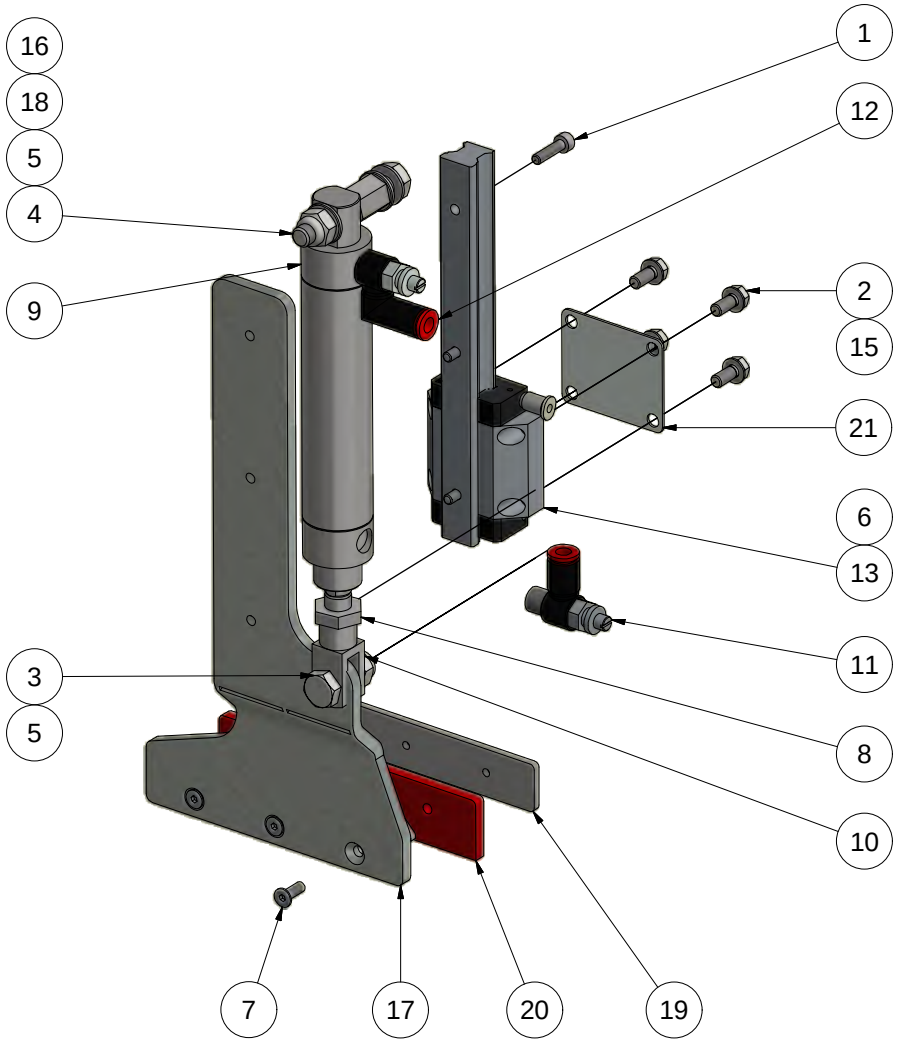

PARTS LIST			
ITEM	QTY	PART NUMBER	DESCRIPTION
1	3	10204016	Hexagon cylinder head M4x16 FZB
2	4	11405012	Hexagon bolt M5x12 FZB
3	1	11408025	Hexagon bolt M8x25 FZB
4	1	11408055	Hexagon bolt M8x55 FZB
5	2	17908000	Self-locking nut M8 FZB
6	1	199071	Straight connector mini Ï 4 x M3
7	3	20404012	Hexagon countersunk head M4x12 FZB
8	1	210427	Lock nut M10x1,25 FZB
9	1	211018	Cylinder RT/57225/M/80
10	1	214100	F-Bracket QM/57025/25
11	1	215110	Flow control banjo Ï 6 x 1/8"t
12	1	215114	Flow control banjo swivel Ï 6 x 1/8"t
13	1	222315	Ball runner block s.15 wide
14	1	222332	Ball guide rail s.15/160mm
15	4	82105900	Washer M5 FZB
16	3	82108000	Washer M8 FZB
17	1	M101781	Beam Scraping Plate Left
18	1	M101791	Cylinder spacer 17mm
19	1	M101844	Scraping Rubber Clamp 120x20
20	1	M101845	Scraping rubber 120x25mm
21	1	M101855	Spacer for 15mm wide guideblock

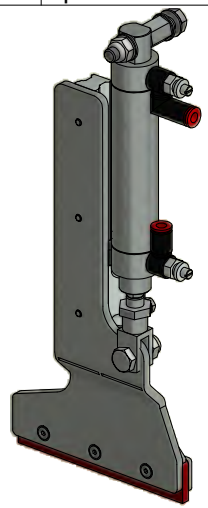

Break all edges

Revision:	Approved	Date:	Revision Description
2	WA	09-01-2017	Bolts changed

The document is property of HEDENSTED GRUPPEN A/S and may not be reproduced or disclosed to any third person without the consent of HEDENSTED GRUPPEN A/S

HEDENSTED GRUPPEN

Scale: 1 : 2	Not specificed tolerance according to: DS/ISO 2768-m	Sheet size: A3
	Surface properties: No	Sheet: 1 /1
Part No.: M101959	Material:	
Description 1: Beam scrapert Left Top		
Description 2:		

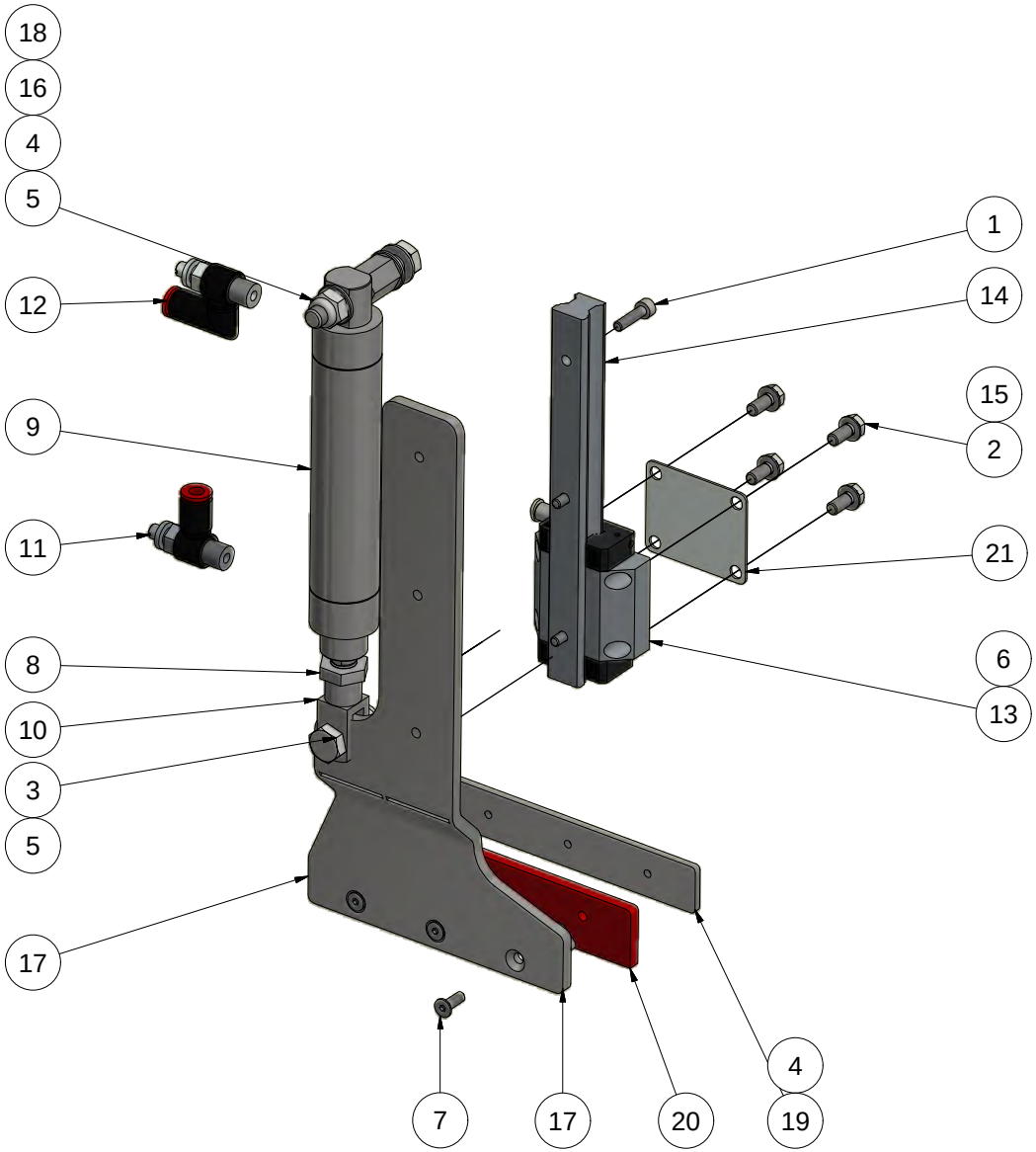

PARTS LIST			
ITEM	QTY	PART NUMBER	DESCRIPTION
1	3	10204016	Hexagon cylinder head M4x16 FZB
2	4	11405012	Hexagon bolt M5x12 FZB
3	1	11408025	Hexagon bolt M8x25 FZB
4	1	11408055	Hexagon bolt M8x55 FZB
5	2	17908000	Self-locking nut M8 FZB
6	1	199071	Straight connector mini Ï 4 x M3
7	3	20404012	Hexagon countersunk head M4x12 FZB
8	1	210427	Lock nut M10x1,25 FZB
9	1	211018	Cylinder RT/57225/M/80
10	1	214100	F-Bracket QM/57025/25
11	1	215110	Flow control banjo Ï 6 x 1/8"t
12	1	215114	Flow control banjo swivel Ï 6 x 1/8"t
13	1	222315	Ball runner block s.15 wide
14	1	222332	Ball guide rail s.15/160mm
15	4	82105900	Washer M5 FZB
16	3	82108000	Washer M8 FZB
17	1	M101780	Beam Scraping Plate Right
18	1	M101791	Cylinder spacer 17mm
19	1	M101844	Scraping Rubber Clamp 120x20
20	1	M101845	Scraping rubber 120x25mm
21	1	M101855	Spacer for 15mm wide guideblock

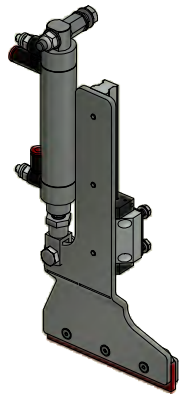

Break all edges

Revision:	Approved	Date:	Revision Description
2	WA	09-01-2017	Bolts changes

The document is property of HEDENSTED GRUPPEN A/S and may not be reproduced or disclosed to any third person without the consent of HEDENSTED GRUPPEN A/S

HEDENSTED GRUPPEN

Scale: 1 : 2	Not specificed tolerance according to: DS/ISO 2768-m	Sheet size: A3
	Surface properties: No	Sheet: 1 /1
Part No.: M101960	Material:	
Description 1: Beam scraper Right Top		
Description 2:		

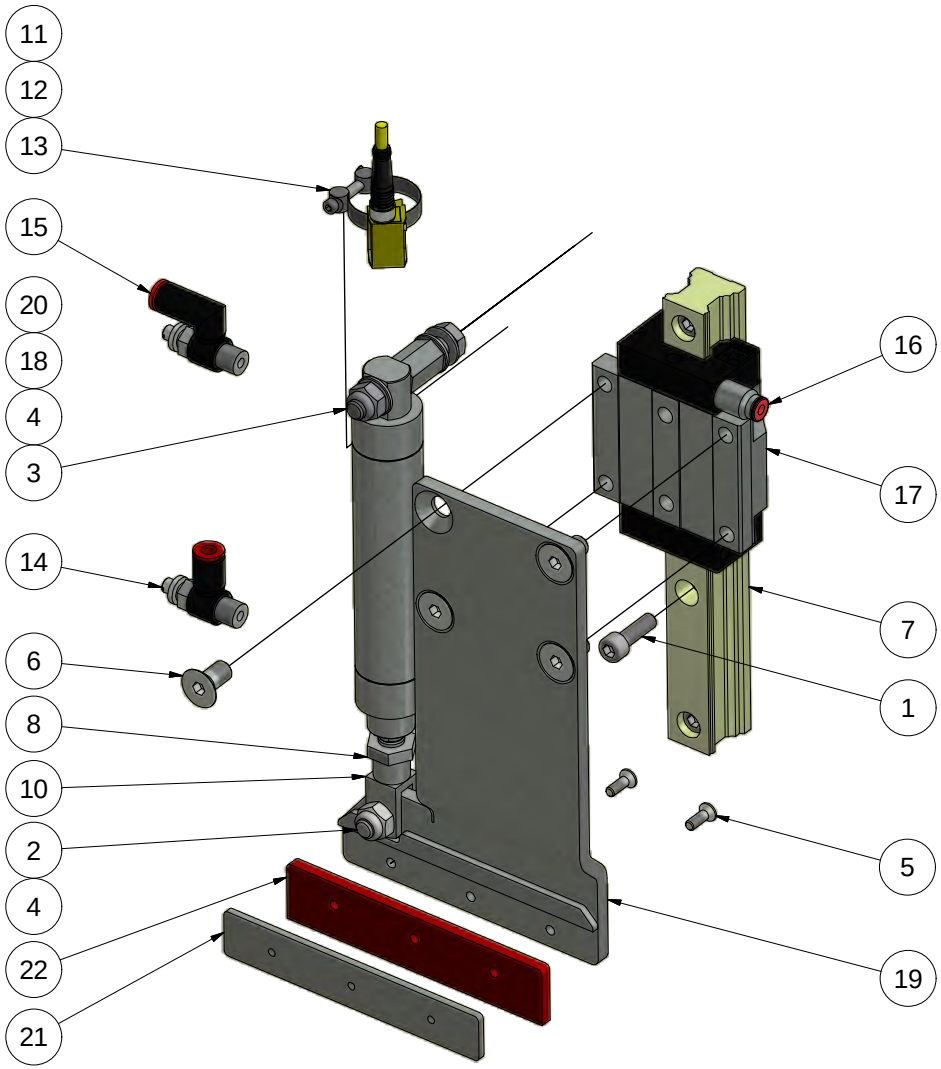

PARTS LIST

ITEM	QTY	PART NUMBER	DESCRIPTION
1	4	10206020	Hexagon cylinder head M6x20 FZB
2	1	11408025	Hexagon bolt M8x25 FZB
3	1	11408055	Hexagon bolt M8x55 FZB
4	2	17908000	Self-locking nut M8 FZB
5	3	20404012	Hexagon countersunk head M4x12 FZB
6	4	20408016	Hexagon countersunk head M8x16 FZB
7	1	207990	Ball guide rail s.25/200mm
8	1	210427	Lock nut M10x1,25 FZB
9	1	211018	Cylinder RT/57225/M/80
10	1	214100	F-Bracket QM/57025/25
11	1	214311	Reed Inductive sensor for Roundline (Yellow)
12	1	214314	Cable w. plug M8 3P 3M
13	1	214319	Clamp for sensor Ï 8-25mm, KLP 25
14	1	215110	Flow control banjo Ï 6 x 1/8"t
15	1	215114	Flow control banjo swivel Ï 6 x 1/8"t
16	1	215926	Straight connector Ï 4 x M6
17	1	222300	Ball runner block s.25 wide
18	3	82108000	Washer M8 FZB
19	1	M101779	Beam Scraping Plate Middle
20	1	M101795	Cylinder spacer 19,4mm
21	1	M101844	Scraping Rubber Clamp 120x20
22	1	M101845	Scraping rubber 120x25mm

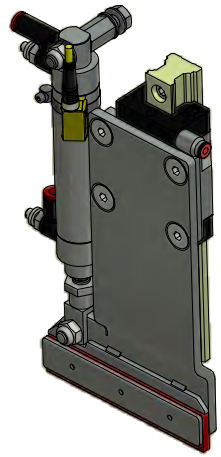

Break all edges

Revision:	Approved	Date:	Revision Description
2	WA	10-01-2017	Bolts changed

The document is property of HEDENSTED GRUPPEN A/S and can no account be copied or discloses to any third person.

HEDENSTED GRUPPEN

Scale: 1 : 2	Not specificed tolerance according to: DS/ISO 2768-m		Sheet size: A3
	Surface properties: No		Sheet: 1 /1
Part No.: M101961	Material:		
Description 1: Beam scraper Top			
Description 2:			

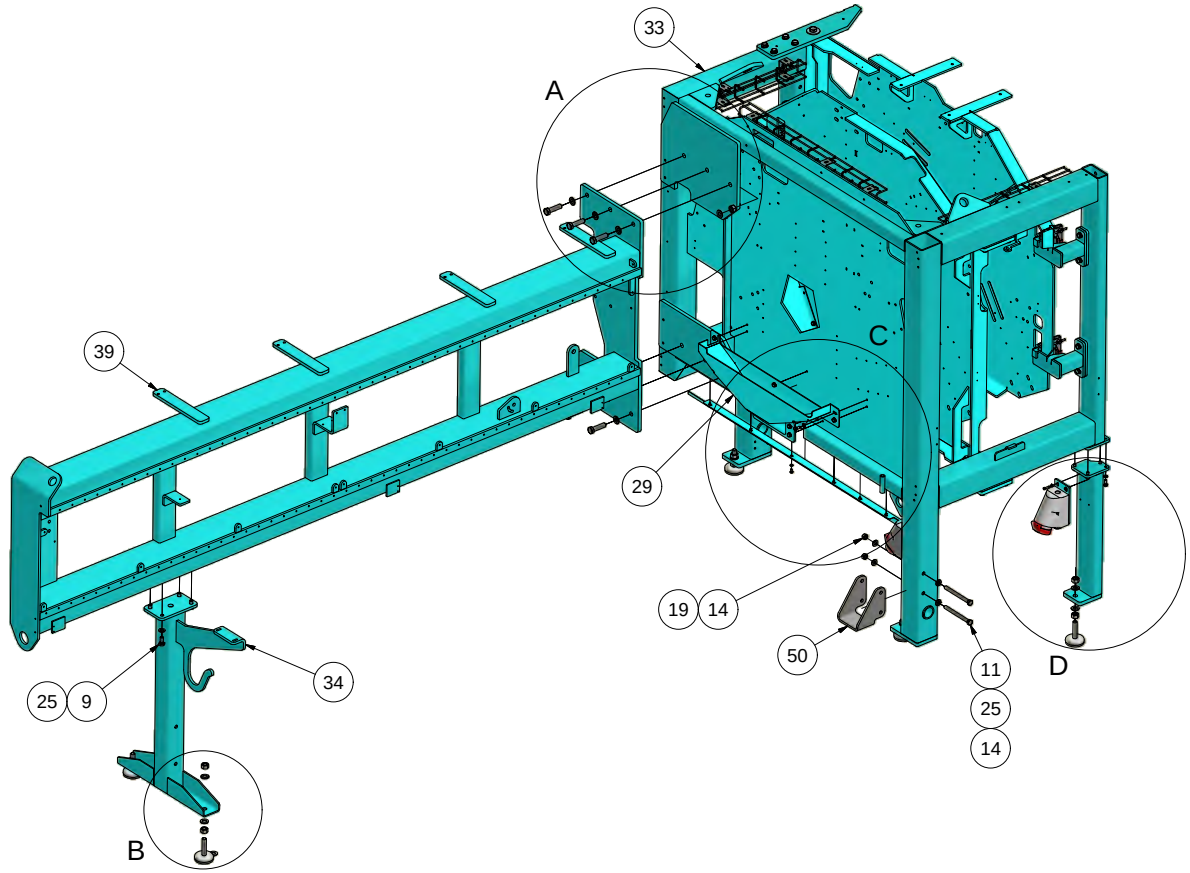

PARTS LIST			
ITEM	QTY	PART NUMBER	DESCRIPTION
1	4	10205020	Hexagon cylinder head M5x20 FZB
2	14	10206010	Hexagon cylinder head M6x10 FZB
3	16	10206045	Hexagon cylinder head M6x45 FZB
4	21	11406010	Hexagon bolt M6x10 FZB
5	3	11408012	Hexagon bolt M8x12 FZB
6	13	11408016	Hexagon bolt M8x16 FZB
7	4	11408020	Hexagon bolt M8x20 FZB
8	8	11410020	Hexagon bolt M10x20 FZB
9	12	11412025	Hexagon bolt M12x25 FZB
10	8	11412040	Hexagon bolt M12x40 FZB
11	4	11412140	Hexagon bolt M12x140 FZB
12	10	11416060	Hexagon bolt M16x60 FZB
13	10	1516000	Nut M16 FZB
14	4	17912000	Self-locking nut M12 FZB
15	10	17916000	Self-locking nut M16 FZB
16	2	197504	CEE Wall socket 5P/16A/400V
17	2,0 m	600440	Cable duct metal CF 54_50
18	7	600445	Cable duct U-bracket UC 50-G
19	2	600455	Cabel gland M20 Ï 5-12
20	3	76006012	Buttonhead bolt M6x12 FZB
21	4	82105900	Washer M5 FZB
22	21	82106000	Washer M6 FZB
23	20	82108000	Washer M8 FZB
24	8	82110000	Washer M10 FZB
25	28	82112000	Washer M12 FZB
26	22	82116000	Washer M16 FZB
27	8	82130000	Washer M30 FZB
28	8	82616000	Washer Ï 17xÏ 50x3 FZB
29	1	M101766	Funnel For Beam Wash
30	4	M101800	Block For Clamp Lock
31	1	M101801	Door Buttom Hinge
32	4	M101824	Latch clamp GN851.1 - 320 - t3
33	1	M101835	Frame Welding HG10
34	1	M101838	Leg Frame
35	1	M101839	Frame Leg
36	1	M101840	Door 1
37	1	M101841	Door 2
38	2	M101842	Guide Bracket Left
39	1	M101875	Frame, machined
40	1	M101893	Frame Slope
41	1	M101894	Frame Slope
42	2	M101966	Guide Bracket Right
43	1	M101967	Door Top Hinge
44	2	M101968	Plate for Wall socket 5-pole
45	1	M102445	Shute for L1T, HG10
46	1	M102446	Shute for Top1, HG10
47	2	M11763	Door Bracket Plate
48	3	M200102	Machine shoe M16x70xÏ 70
49	2	M200103	Machine shoe w.eye M16x70xÏ 70
50	2	M201310	Bracket For Hydraulic Jack
51	2	M201560	Plate
52	4	M20645	Bushing

A (1 : 10)

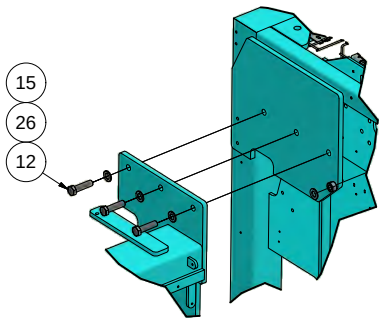

B (1 : 10)

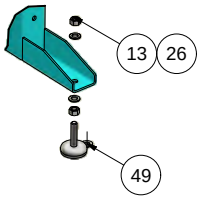

C (1 : 10)

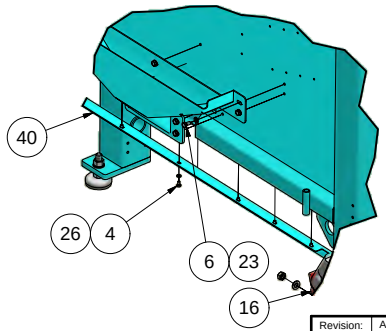

D (1 : 10)

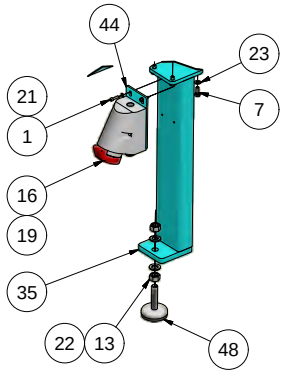

Break all edges

Revision:	Approved	Date:	Revision Description
2	KL	09-12-2016	Components added / changed

This drawing is strictly confidential and must not be copied or disclosed to third parties without written consent of HEDENSTED GRUPPEN A/S

HEDENSTED GRUPPEN

Scale: 1:14	Not specificed tolerance according to: DS/ISO 2768-m	Sheet size: A2
	Surface properties: No	Sheet: 1 /3
Part No.: M101837	Material:	
Description 1: Frame Complet HG10		
Description 2:		

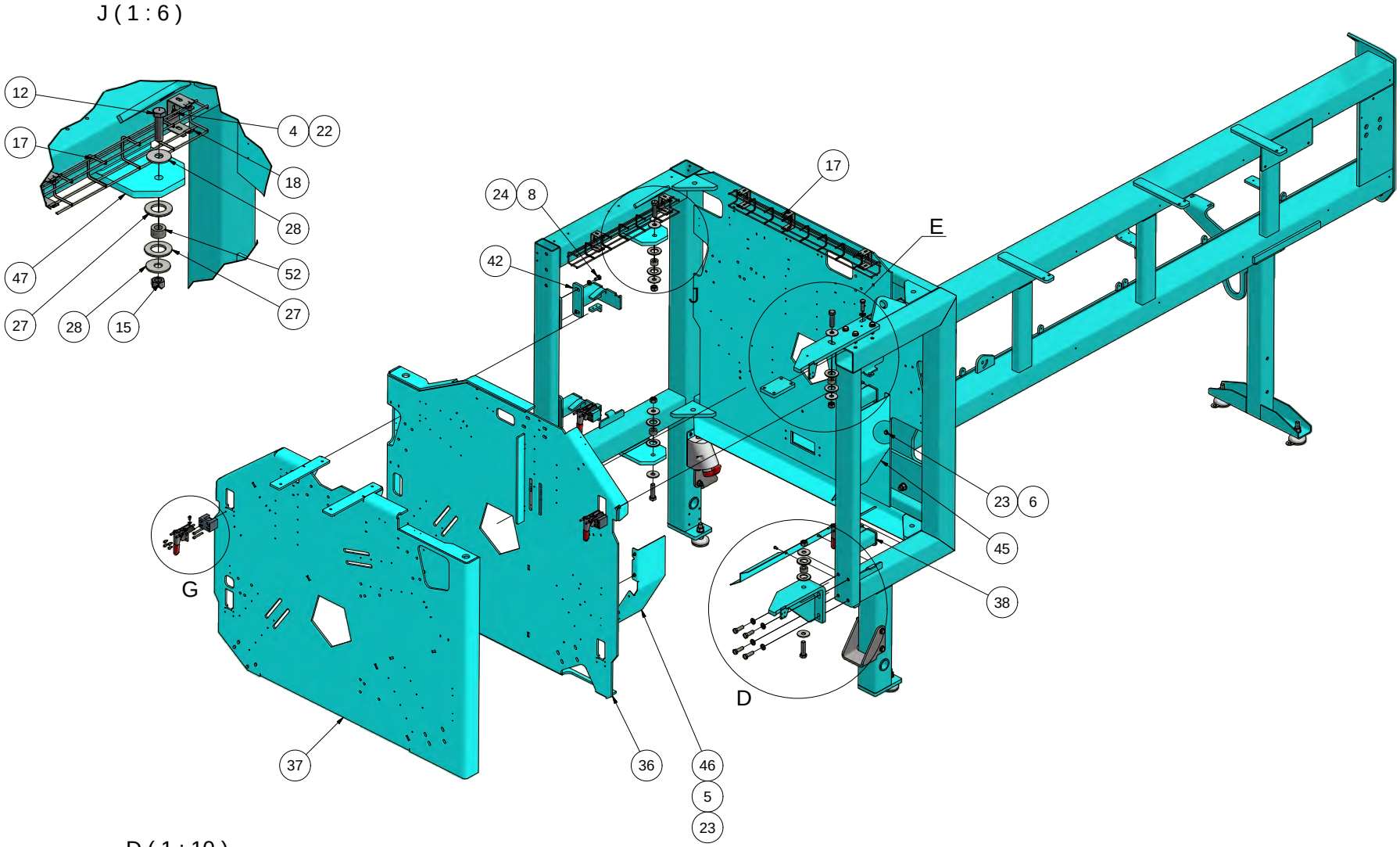

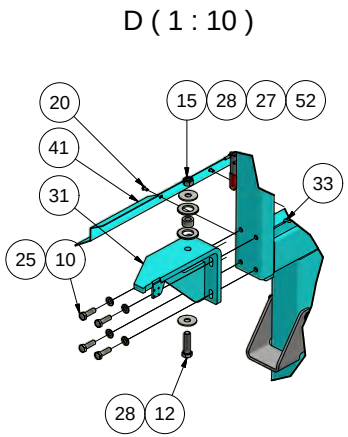

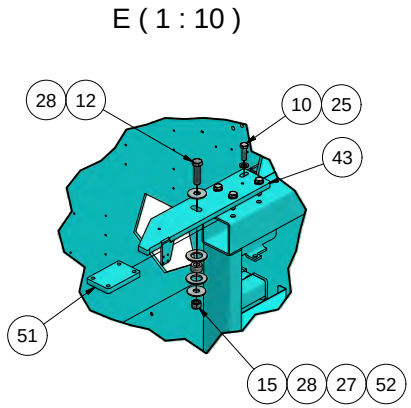

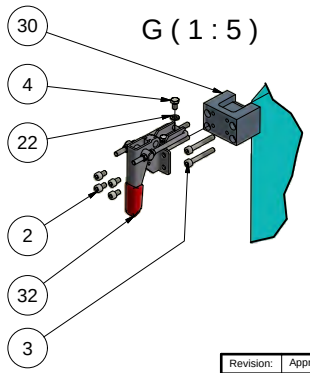

Break all edges

Revision:	Approved	Date:	Revision Description
2	KL	09-12-2016	Components added / changed

This drawing is the property of HEDE NSTED GRUPPEN A/S. Reproduction prohibited without written permission.

HEDENSTED GRUPPEN A/S

Scale: 1:14	Not specified tolerance according to: DS/ISO 2768-m	Sheet size: A2
	Surface properties: No	Sheet: 2 /3
Part No.: M101837	Material:	
Description 1: Frame Complet HG10		
Description 2:		

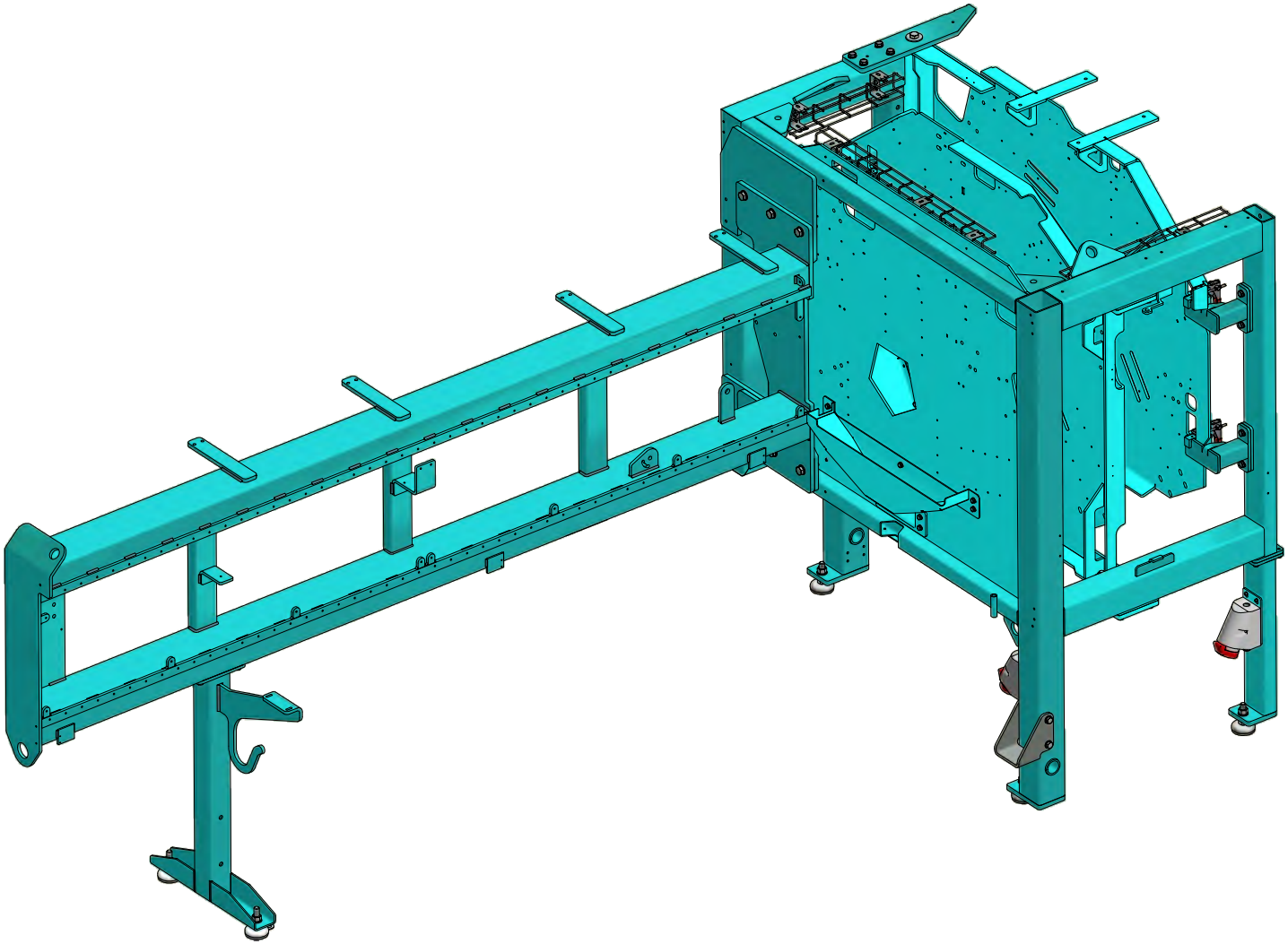

Break all edges

Revision:	Approved	Date:	Revision Description
2	KL	09-12-2016	Components added / changed

This drawing is the property and intellectual property of HEDE NSTED GRUPPEN A/S

Scale: 1:14	Not specified tolerance according to: DS/ISO 2768-m	Sheet size: A2
	Surface properties: No	Sheet: 3 /3
Part No.: M101837	Material:	
Description 1: Frame Complet HG10		
Description 2:		

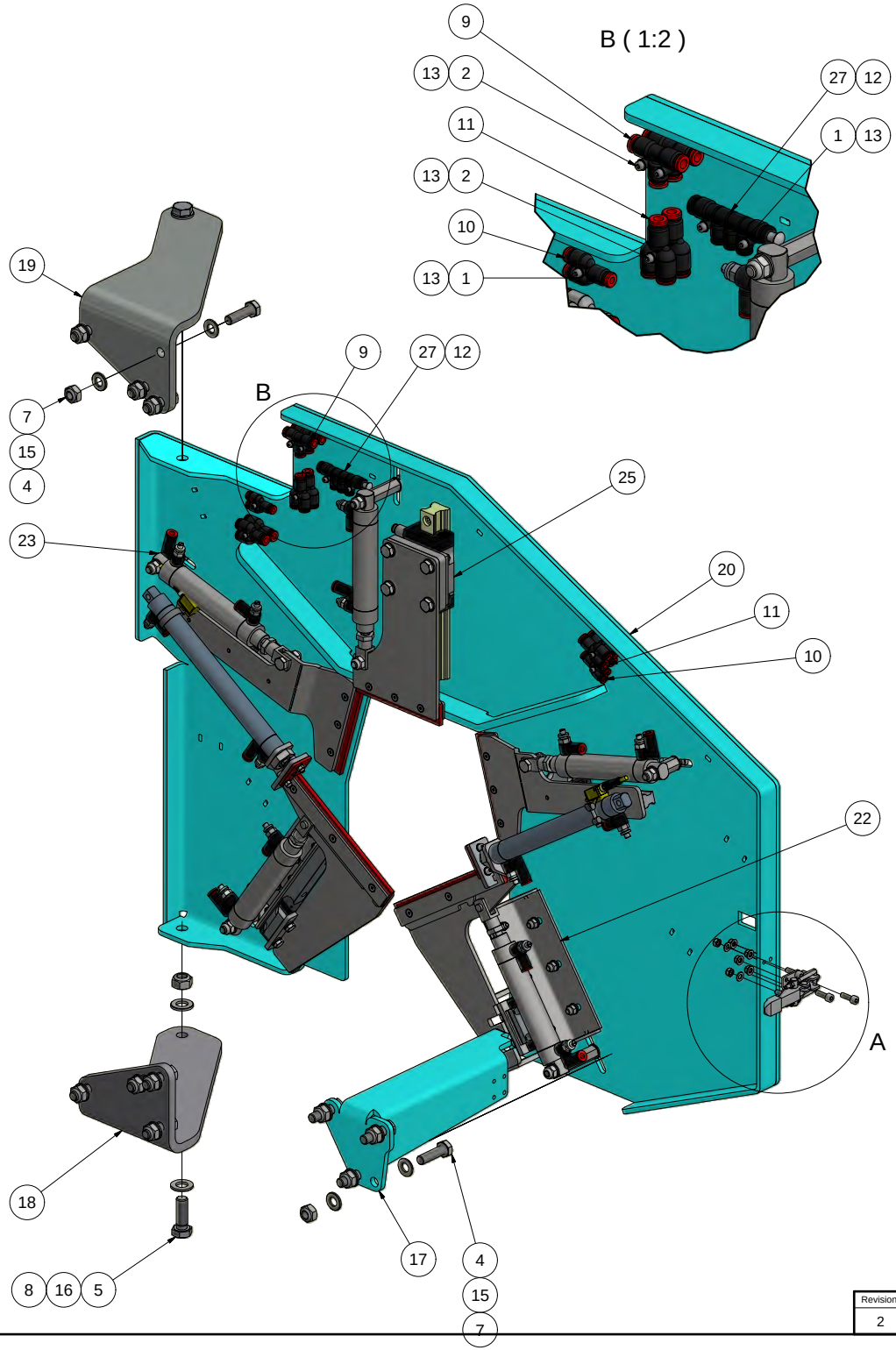

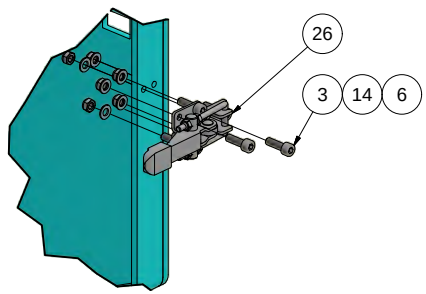

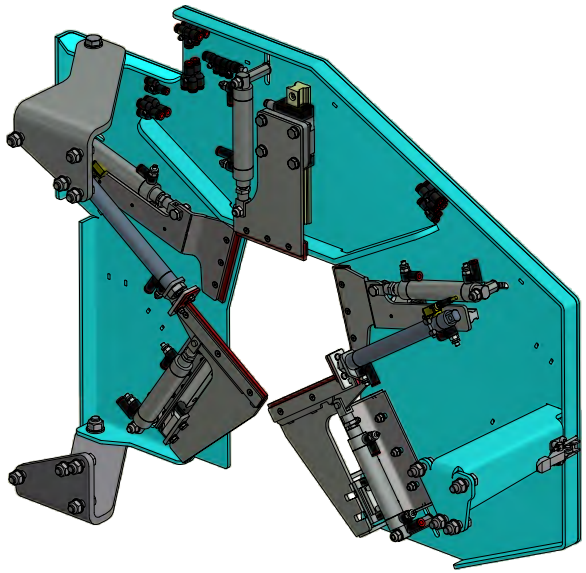

PARTS LIST

ITEM	QTY	PART NUMBER	DESCRIPTION
1	4	10203016	Hexagon cylinder head M3x16 FZB
2	5	10203030	Hexagon cylinder head M3x30 FZB
3	6	10205016	Hexagon cylinder head M5x16 FZB
4	12	11410035	Hexagon bolt M10x35 FZB
5	2	11412035	Hexagon bolt M12x35 FZB
6	6	17905000	Self-locking nut M5 FZB
7	12	17910000	Self-locking nut M10 FZB
8	2	17912000	Self-locking nut M12 FZB
9	2	215850	Tee Ï 6 x Ï 6 x Ï 6
10	2	215857	Y-connector 2xÏ 4 x Ï 4
11	6	215860	Y-connector 2xÏ 6 x Ï 6
12	1	216748	Plug Ï 6 mm
13	9	82103000	Washer M3 FZB
14	6	82105900	Washer M5 FZB
15	24	82110000	Washer M10 FZB
16	4	82112000	Washer M12 FZB
17	1	M101803	Bracket skin scraper lock
18	1	M101804	Bracket skin scraper bottom
19	1	M101805	Bracket skin scraper top
20	1	M101847	Skin scraper HG10 base plate
21	1	M101949	Skin scraper HG10 left bottom
22	1	M101950	Skin scraper HG10 right bottom
23	1	M101951	Skin scraper HG10 left top
24	1	M101952	Skin scraper right top
25	1	M101953	Skin scraper HG10 Top
26	1	M200203	Latch clamp GN 851-160-T2
27	1	M201140	Manifold Ï 6 x 3xÏ 4 x Ï 6

Breake all edges

Revision:	Approved	Date:	Revision Description
2	MBO	09-02-2016	Made

This drawing is strictly confidential and remains the property of HEDENSTED GRUPPEN A/S

HEDENSTED GRUPPEN

Scale: 1:3,5	Not specificed tolerance according to: DS/ISO 2768-m	Sheet size: A2
	Surface properties: No	Sheet: 1 /2
Part No.: M101856	Material:	
Description 1: Skind scraper HG10		
Description 2:		

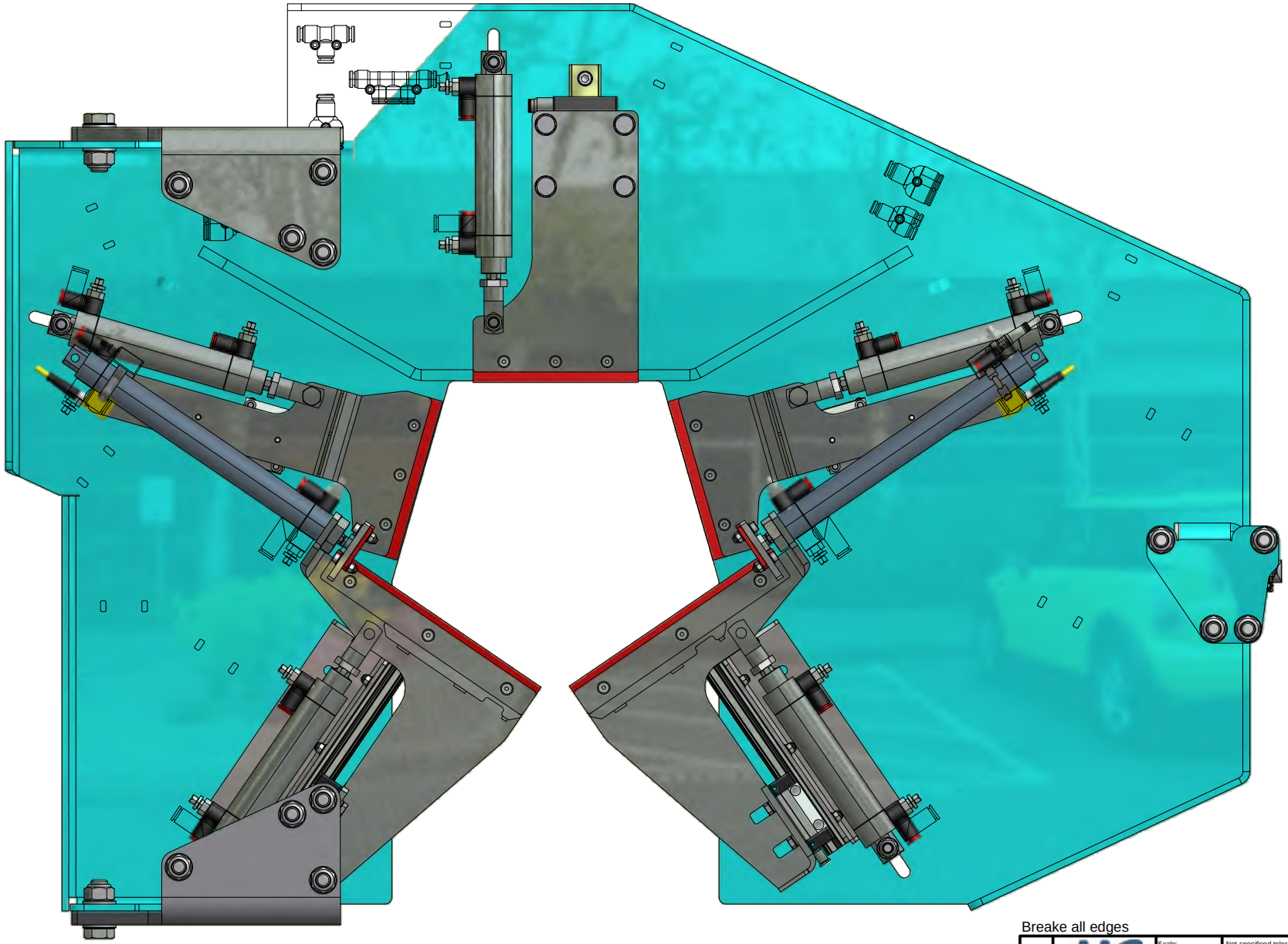

Breake all edges

Revision:	Approved	Date:	Revision Description
2	MBO	09-02-2016	Made

The document is property of HEDENSTED GRUPPEN A/S and can not be copied or discloses to any third person.

HEDENSTED GRUPPEN

Scale: 1:3,5	Not specificed tolerance according to: DS/ISO 2768-m	Sheet size: A3
	Surface properties: No	Sheet: 2 /2
Part No.: M101856	Material:	
Description 1: Skind scraper HG10		
Description 2:		

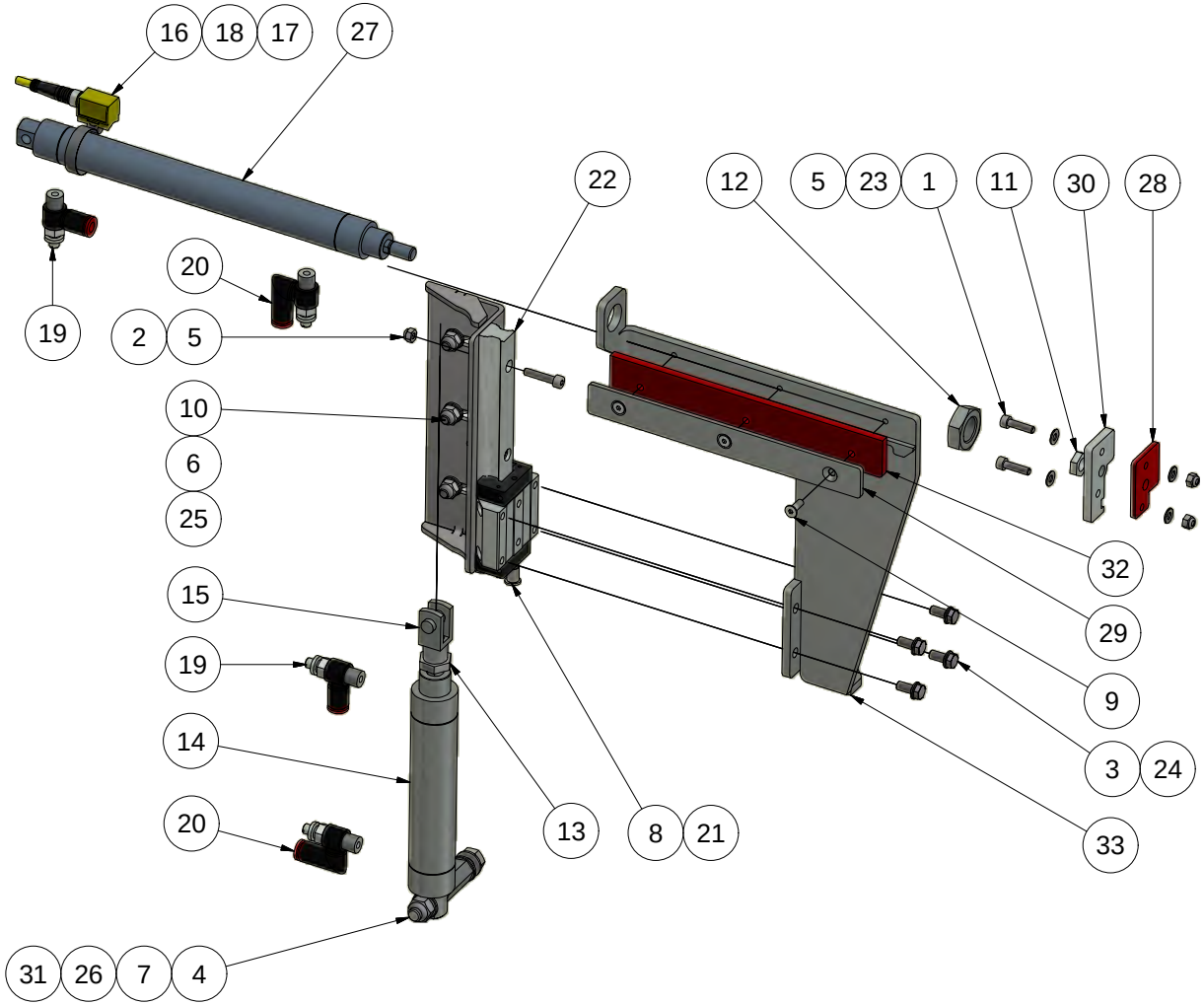

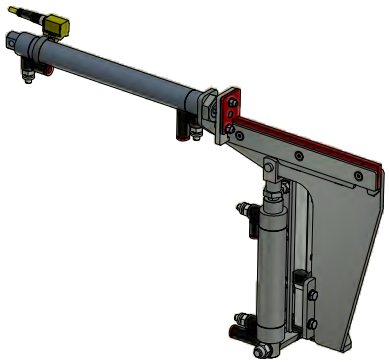

PARTS LIST			
ITEM	QTY	PART NUMBER	DESCRIPTION
1	2	10204016	Hexagon cylinder head M4x16 FZB
2	3	10204020	Hexagon cylinder head M4x20 FZB
3	4	11405012	Hexagon bolt M5x12 FZB
4	1	11408065	Hexagon bolt M8x65 FZB
5	5	17904000	Self-locking nut M4 FZB
6	3	17906000	Self-locking nut M6 FZB
7	1	17908000	Self-locking nut M8 FZB
8	1	199071	Straight connector mini Ï 4 x M3
9	3	20404012	Hexagon countersunk head M4x12 FZB
10	3	20406020	Hexagon countersunk head M6x20 FZB
11	1	210421	Lock nut M8 FZB
12	1	210422	Lock nut M16x1,5 FZB
13	1	210427	Lock nut M10x1,25 FZB
14	1	211018	Cylinder RT/57225/M/80
15	1	214100	F-Bracket QM/57025/25
16	1	214311	Reed Inductive sensor for Roundline (Yellow)
17	1	214314	Cable w. plug M8 3P 3M
18	1	214319	Clamp for sensor Ï 8-25mm, KLP 25
19	2	215110	Flow control banjo Ï 6 x 1/8"t
20	2	215114	Flow control banjo swivel Ï 6 x 1/8"t
21	1	222315	Ball runner block s.15 wide
22	1	222332	Ball guide rail s.15/160mm
23	7	82104000	Washer M4 FZB
24	4	82105900	Washer M5 FZB
25	3	82106000	Washer M6 FZB
26	3	82108000	Washer M8 FZB
27	1	M101729	Cylinder RT/57220/M/160
28	1	M101792	Rubber for cleaner, HG10
29	1	M101793	Rubber clamp bottom, HG10
30	1	M101794	Plate for cleaner, HG10
31	1	M101843	Cylinder spacer 29mm
32	1	M101846	Scraping rubber 178x25mm
33	1	M101852	Skin scraper plate bottom left
34	1	M101854	Skin scraper, bracket bottom

Break all edges

Revision:	Approved	Date:	Revision Description
1	MBO	17-02-2016	Made

The document is property of HEDENSTED GRUPPEN A/S and may not be copied or disclosed to any third person.

HEDENSTED GRUPPEN

Scale: 1 : 3	Not specificed tolerance according to: DS/ISO 2768-m	Sheet size: A3
	Surface properties: No	Sheet: 1 /1
Part No.: M101949	Material:	
Description 1: Skin scraper HG10 left bottom		
Description 2:		

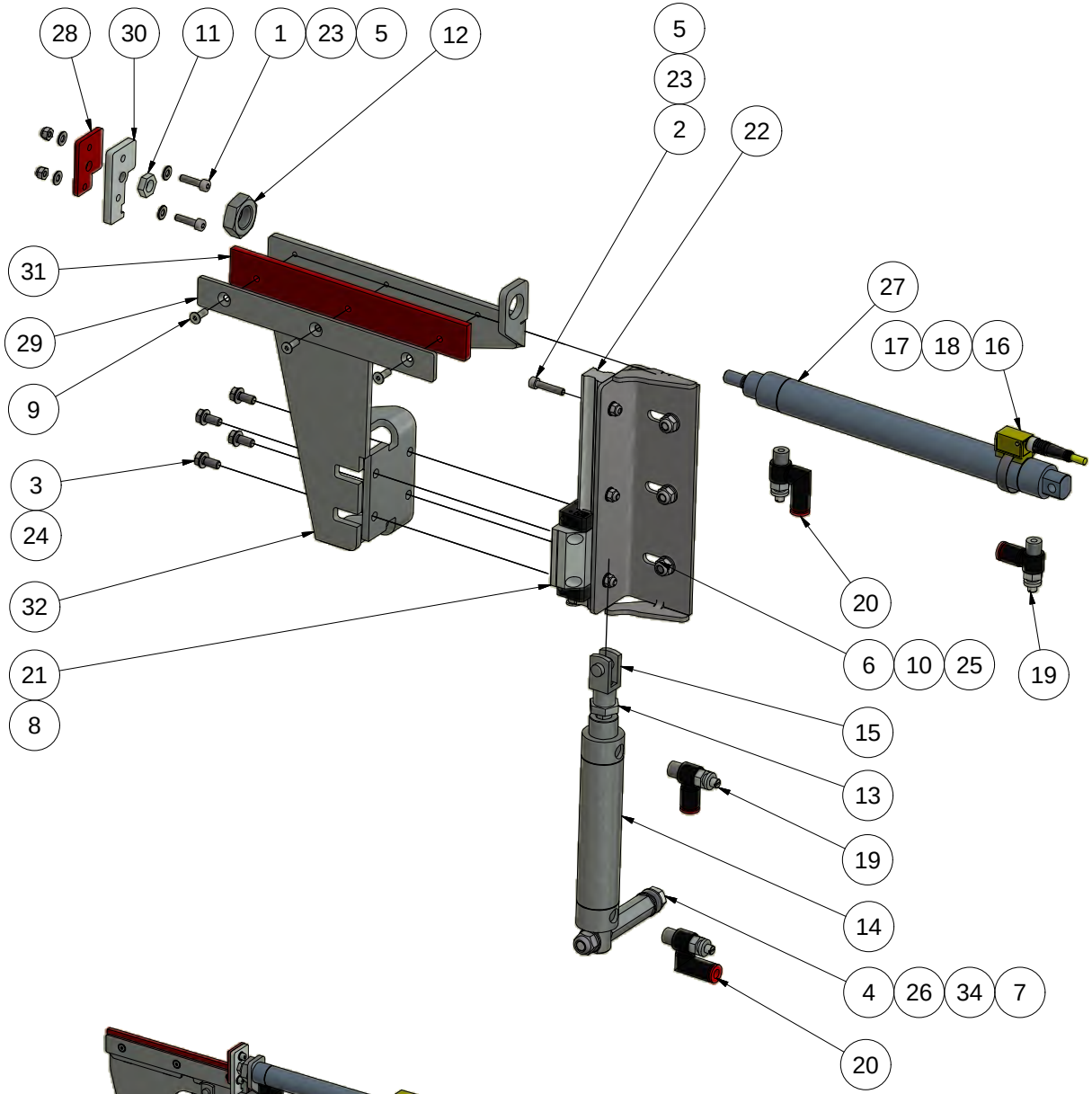

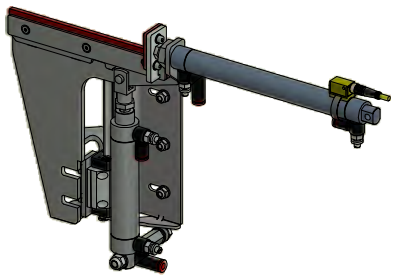

PARTS LIST			
ITEM	QTY	PART NUMBER	DESCRIPTION
1	2	10204016	Hexagon cylinder head M4x16 FZB
2	3	10204020	Hexagon cylinder head M4x20 FZB
3	4	11405012	Hexagon bolt M5x12 FZB
4	1	11408080	Hexagon bolt M8x80 FZB
5	5	17904000	Self-locking nut M4 FZB
6	3	17906000	Self-locking nut M6 FZB
7	1	17908000	Self-locking nut M8 FZB
8	1	199071	Straight connector mini Ï 4 x M3
9	3	20404012	Hexagon countersunk head M4x12 FZB
10	3	20406020	Hexagon countersunk head M6x20 FZB
11	1	210421	Lock nut M8 FZB
12	1	210422	Lock nut M16x1,5 FZB
13	1	210427	Lock nut M10x1,25 FZB
14	1	211018	Cylinder RT/57225/M/80
15	1	214100	F-Bracket QM/57025/25
16	1	214311	Reed Inductive sensor for Roundline (Yellow)
17	1	214314	Cable w. plug M8 3P 3M
18	1	214319	Clamp for sensor Ï 8-25mm, KLP 25
19	2	215110	Flow control banjo Ï 6 x 1/8"t
20	2	215114	Flow control banjo swivel Ï 6 x 1/8"t
21	1	222315	Ball runner block s.15 wide
22	1	222332	Ball guide rail s.15/160mm
23	7	82104000	Washer M4 FZB
24	4	82105900	Washer M5 FZB
25	3	82106000	Washer M6 FZB
26	3	82108000	Washer M8 FZB
27	1	M101729	Cylinder RT/57220/M/160
28	1	M101792	Rubber for cleaner, HG10
29	1	M101793	Rubber clamp bottom, HG10
30	1	M101794	Plate for cleaner, HG10
31	1	M101846	Scraping rubber 178x25mm
32	1	M101851	Skin scraper plate bottom right
33	1	M101854	Skin scraper, bracket bottom
34	1	M101954	Cylinder spacer 47mm

Break all edges

Revision:	Approved	Date:	Revision Description
1	MBO	17-02-2016	Made

The document is property of HEDENSTED GRUPPEN A/S and may not be copied or disclosed to any third person.

HEDENSTED GRUPPEN

Scale: 1:3	Not specificed tolerance according to: DS/ISO 2768-m		Sheet size: A3
	Surface properties: No		Sheet: 1 /1
Part No.: M101950	Material:		
Description 1: Skin scraper HG10 right bottom			
Description 2:			

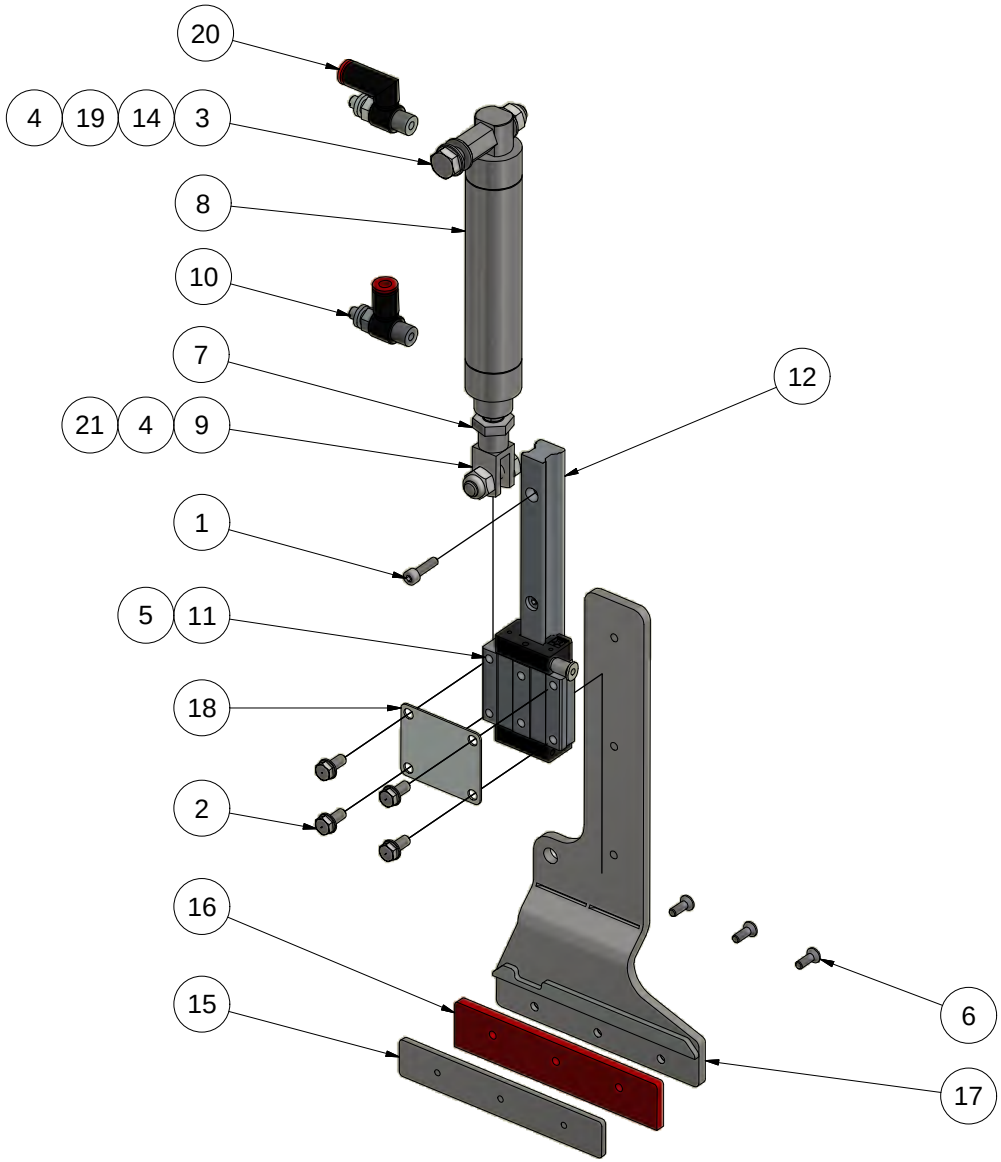

PARTS LIST			
ITEM	QTY	PART NUMBER	DESCRIPTION
1	3	10204016	Hexagon cylinder head M4x16 FZB
2	4	11405012	Hexagon bolt M5x12 FZB
3	1	11408055	Hexagon bolt M8x55 FZB
4	2	17908000	Self-locking nut M8 FZB
5	1	199071	Straight connector mini Ï 4 x M3
6	3	20404012	Hexagon countersunk head M4x12 FZB
7	1	210427	Lock nut M10x1,25 FZB
8	1	211018	Cylinder RT/57225/M/80
9	1	214100	F-Bracket QM/57025/25
10	1	215110	Flow control banjo Ï 6 x 1/8"t
11	1	222315	Ball runner block s.15 wide
12	1	222332	Ball guide rail s.15/160mm
13	4	82105900	Washer M5 FZB
14	3	82108000	Washer M8 FZB
15	1	M101844	Scraping Rubber Clamp 120x20
16	1	M101845	Scraping rubber 120x25mm
17	1	M101849	Skin scraper plate left
18	1	M101855	Spacer for 15mm wide guideblock
19	1	M200800	Cylinder spacer 19mm
20	1	215114	Flow control banjo swivel Ï 6 x 1/8"t
21	1	11408025	Hexagon bolt M8x25 FZB

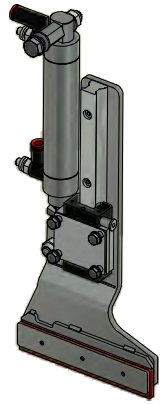

Break all edges

Revision:	Approved	Date:	Revision Description
2	WA	09-01-2017	Made

The document is strictly confidential and may in no account be copied or discloses to any third person.

HEDENSTED GRUPPEN A/S

Scale: 1 : 2,5

Not specificed tolerance according to: DS/ISO 2768-m

Sheet size: A3

Surface properties: No

Sheet: 1 /1

Part No.: M101951

Material:

Description 1: Skin scraper HG10 left top

Description 2:

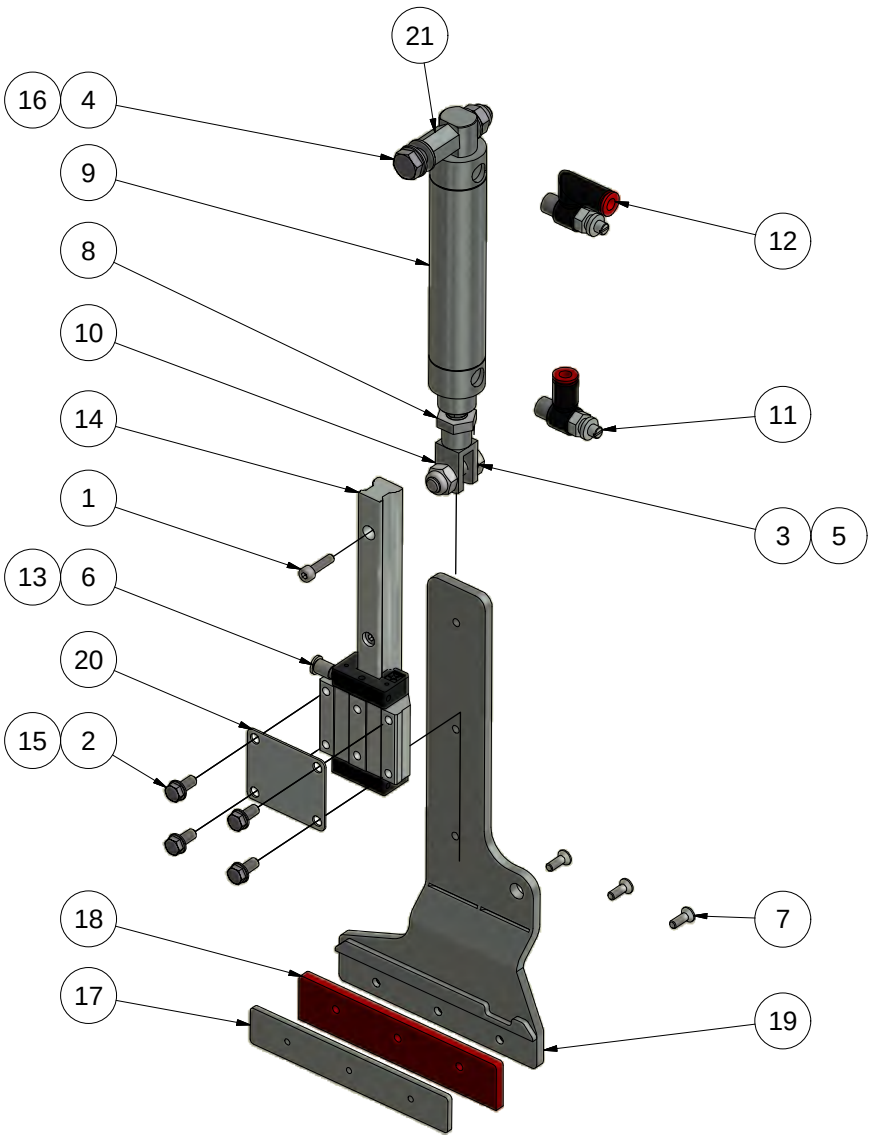

PARTS LIST			
ITEM	QTY	PART NUMBER	DESCRIPTION
1	3	10204016	Hexagon cylinder head M4x16 FZB
2	4	11405012	Hexagon bolt M5x12 FZB
3	1	11408025	Hexagon bolt M8x25 FZB
4	1	11408055	Hexagon bolt M8x55 FZB
5	2	17908000	Self-locking nut M8 FZB
6	1	199071	Straight connector mini Ï 4 x M3
7	3	20404012	Hexagon countersunk head M4x12 FZB
8	1	210427	Lock nut M10x1,25 FZB
9	1	211018	Cylinder RT/57225/M/80
10	1	214100	F-Bracket QM/57025/25
11	1	215110	Flow control banjo Ï 6 x 1/8"t
12	1	215114	Flow control banjo swivel Ï 6 x 1/8"t
13	1	222315	Ball runner block s.15 wide
14	1	222332	Ball guide rail s.15/160mm
15	4	82105900	Washer M5 FZB
16	3	82108000	Washer M8 FZB
17	1	M101844	Scraping Rubber Clamp 120x20
18	1	M101845	Scraping rubber 120x25mm
19	1	M101848	Skin scraper plate right
20	1	M101855	Spacer for 15mm wide guideblock
21	1	M200800	Cylinder spacer 19mm

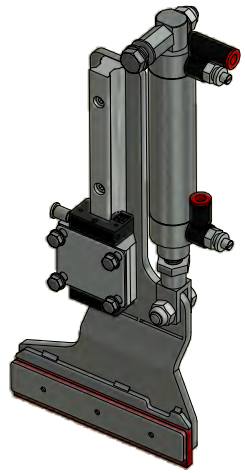

Break all edges

Revision:	Approved	Date:	Revision Description
2	WA	17-02-2016	Bolts Changed

The document is property confidential and may not be in no account be copied or discloses to any third person.

HEDENSTED GRUPPEN A/S

Scale: 1 : 2,5	Not specificed tolerance according to: DS/ISO 2768-m		Sheet size: A3
	Surface properties: No		Sheet: 1 /1
Part No.: M101952	Material:		
Description 1: Skin scraper right top			
Description 2:			

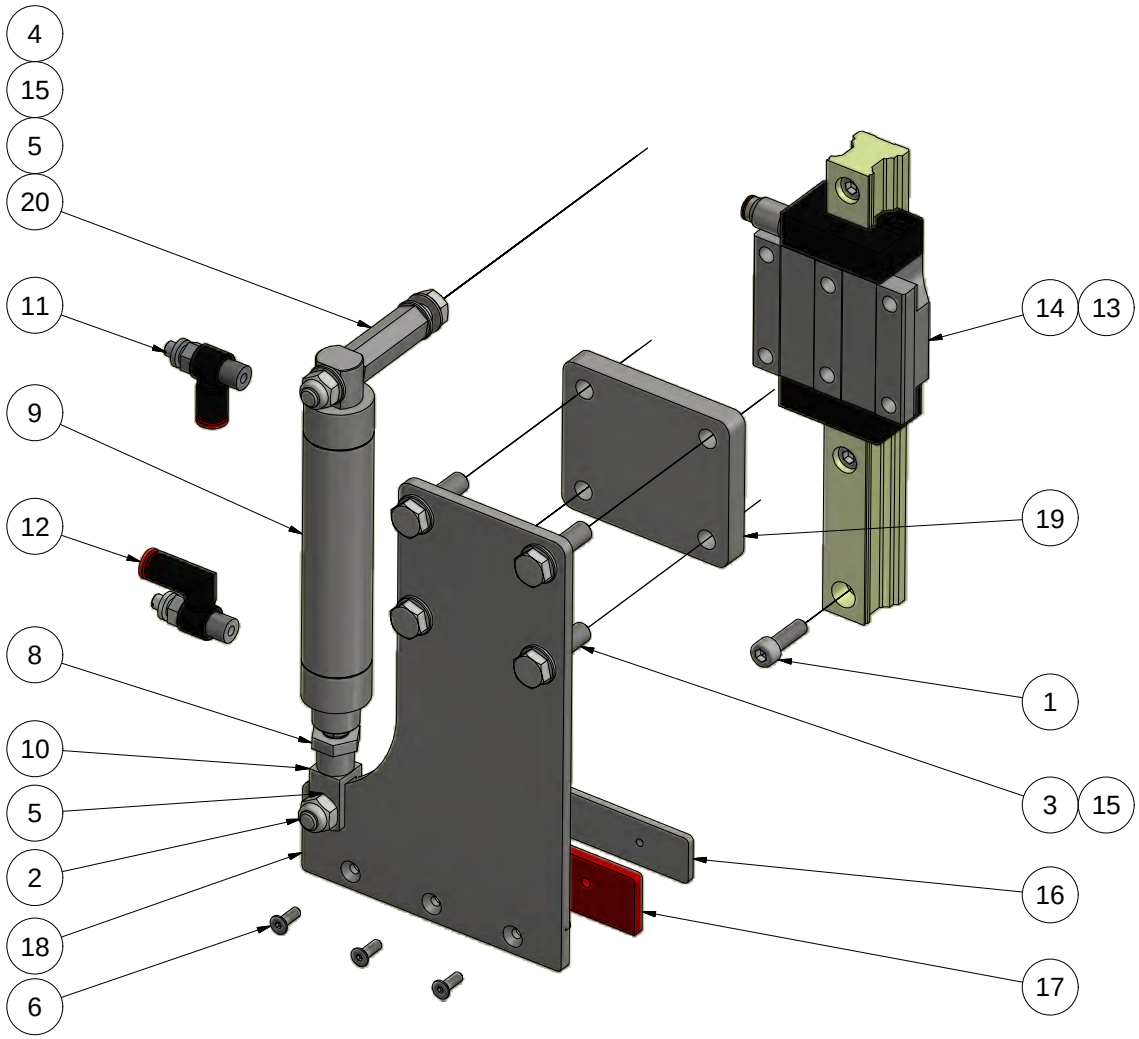

PARTS LIST			
ITEM	QTY	PART NUMBER	DESCRIPTION
1	4	10206020	Hexagon cylinder head M6x20 FZB
2	1	11408025	Hexagon bolt M8x25 FZB
3	4	11408030	Hexagon bolt M8x30 FZB
4	1	11408075	Hexagon bolt M8x75 FZB
5	2	17908000	Self-locking nut M8 FZB
6	3	20404012	Hexagon countersunk head M4x12 FZB
7	1	207990	Ball guide rail s.25/200mm
8	1	210427	Lock nut M10x1,25 FZB
9	1	211018	Cylinder RT/57225/M/80
10	1	214100	F-Bracket QM/57025/25
11	1	215110	Flow control banjo Ï 6 x 1/8"t
12	1	215114	Flow control banjo swivel Ï 6 x 1/8"t
13	1	215926	Straight connector Ï 4 x M6
14	1	222300	Ball runner block s.25 wide
15	7	82108000	Washer M8 FZB
16	1	M101844	Scraping Rubber Clamp 120x20
17	1	M101845	Scraping rubber 120x25mm
18	1	M101850	Skin scraper plate top
19	1	M200795	Spacer
20	1	M200805	Cylinder spacer 40mm

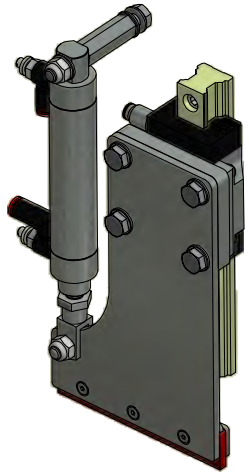

Break all edges

Revision:	Approved	Date:	Revision Description
2	WA	09-01-2017	Bolts changed

The document is property of HEDENSTED GRUPPEN A/S and may not be copied or disclosed to any third person without consent.

HEDENSTED GRUPPEN

Scale: 1 : 2	Not specificed tolerance according to: DS/ISO 2768-m	Sheet size: A3
	Surface properties: No	Sheet: 1 /1
Part No.: M101953	Material:	
Description 1: Skin scraper HG10 Top		
Description 2:		