SPARE PARTS

Quick Skin

Model 2016

1. Table of contents.

1. Table of content.
2. Spare parts.
3. Electric diagram.
4. Air diagram.

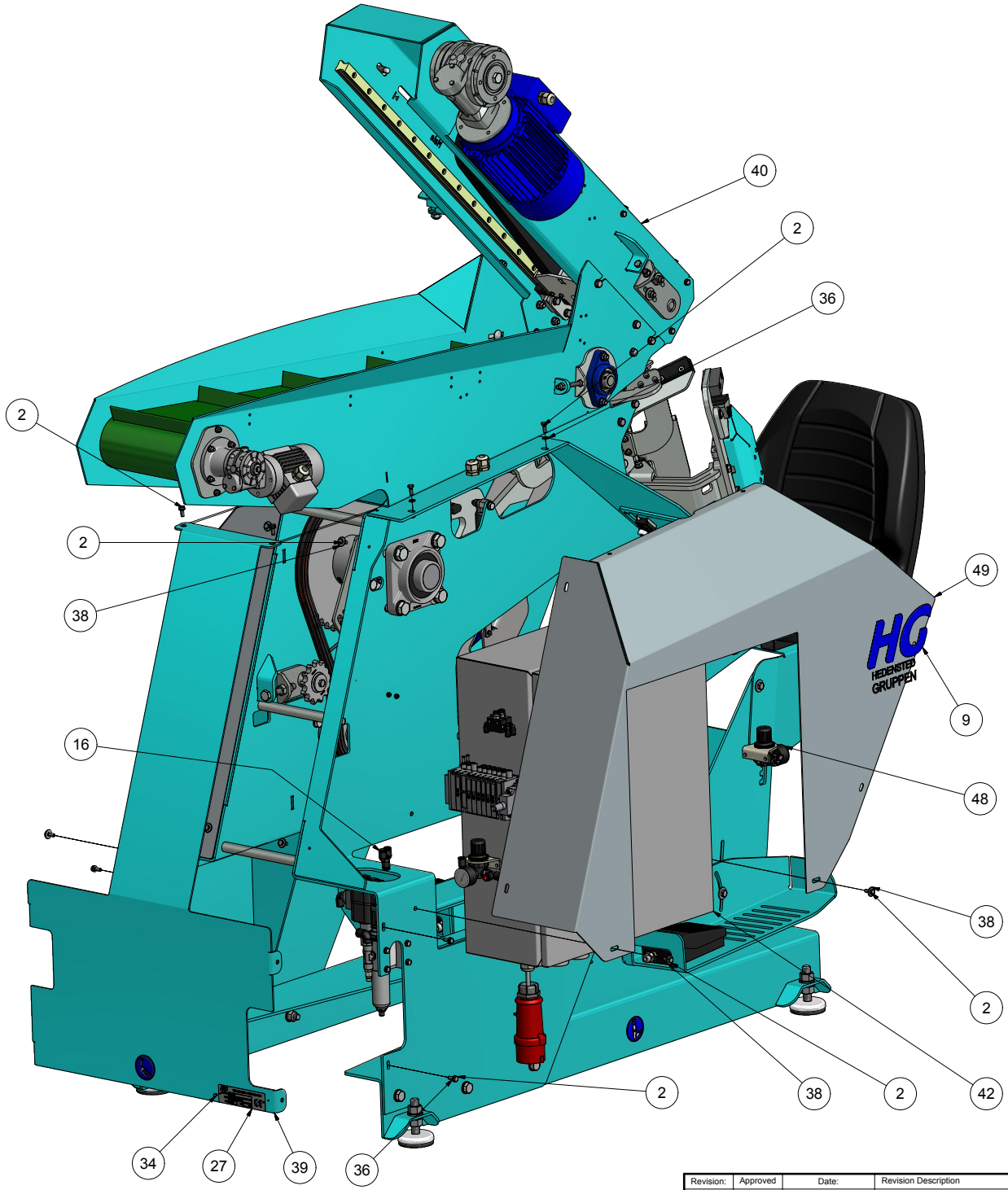

PARTS LIST

ITEM	QTY	PART NUMBER	DESCRIPTION
1	2	11104040	Hexagon bolt M4x40 FZB
2	25	11406016	Hexagon bolt M6x16 FZB
3	2	11408016	Hexagon bolt M8x16 FZB
4	2	11408065	Hexagon bolt M8x65 FZB
5	2	17904000	Self-locking nut M4 FZB
6	2	17906000	Self-locking nut M6 FZB
7	2	17908000	Self-locking nut M8 FZB
8	1	181197	Headcutter with. Intersoll
9	2	19767	HG Logo - big 205x108mm
10	2	20405010	Hexagon countersunk head M5x10 FZB
11	1	206694	Panel mounting nut 2962-89
12	1	214180	Mounting brace
13	2	215405	Shutter valve G1/8
14	1	215550	Gauge 0-10 bar 1/8" Ø40
15	4	215760	Elbow swirvel Ø6 x 1/8"
16	1	215870	Y-connector 2xØ8 x Ø8
17	2	215900	Straight connector Ø6 x 1/8"t
18	20,0 m	216116	Air hose Ø6mm pur red
19	20,0 m	216118	Air hose Ø6mm Pur blue
20	1,5 m	216124	Air hose Ø8mm blue
21	1,2 m	216126	Air hose Ø10mm pur white
22	1	216204	Regulator 1/4" 0-10bar
23	1	216358	Elbow 1/4"t x 1/4" (M/F)
24	1	216388	L - connector 1/4" x Ø8 x Ø8
25	1	216537	Elbow swirvel Ø8 1/4"
26	1	217010	Quick coupling female 1_4
27	1	30055	Id plate HG Quick skin
28	3,5 m	600260	Cable JZ 4x1,0mm²
29	7,5 m	600528	Cable OZ 4x0,75mm2
30	6,5 m	600645	Cable CY-JZ TR. 4G1,0mm2
31	3	600830	Socket M12 angle 4-pol
32	14,5 m	601000	Cable OZ 2x0,75mm2
33	5,5 m	601005	Cable JZ 12G 0,75
34	2	7003208	Pop rivet ø3.2x8mm
35	2	82104000	Chamfered Washer M4 FZB
36	14	82106000	Chamfered Washer M6 FZB
37	6	82108000	Chamfered Washer M8 FZB
38	13	82606000	Washer Ø6,4x18x1,6
39	1	M100613	Back cover assembly
40	1	M100711	Body pull + seat assembly
41	1	M100719	headcutter assembly
42	1	M100728	Electrical box assembly
43	1	M100741	Ramp valve AV03x8-DSUB25
44	1	M100767	Soft-starter assembly
45	1	M100775	Stickers for 206330
46	1	M100818	Headcutter base plate
47	2	M100819	Bush for base
48	1	M100821	Regulator unit
49	1	M100879	Left cover
50	1	M100880	Right cover
51	4	M201165	Base for cable

Break all edges

Revision:	Approved	Date:	Revision Description
1	HG	27-09-2015	Revision changed to numeric

This document is the property of HEDENSTED GRUPPEN A/S. Reproduction or distribution without written permission is prohibited.

HEDENSTED GRUPPEN

Scale: 1 : 6	Not specified tolerance according to: DS/ISO 2768-m	Sheet size: A2
	Surface properties: No	Sheet: 1 /3
Part No.: 206330	Material:	

Description 1: HG Quick Skin 14

Description 2: Incl. pneumatic knife.

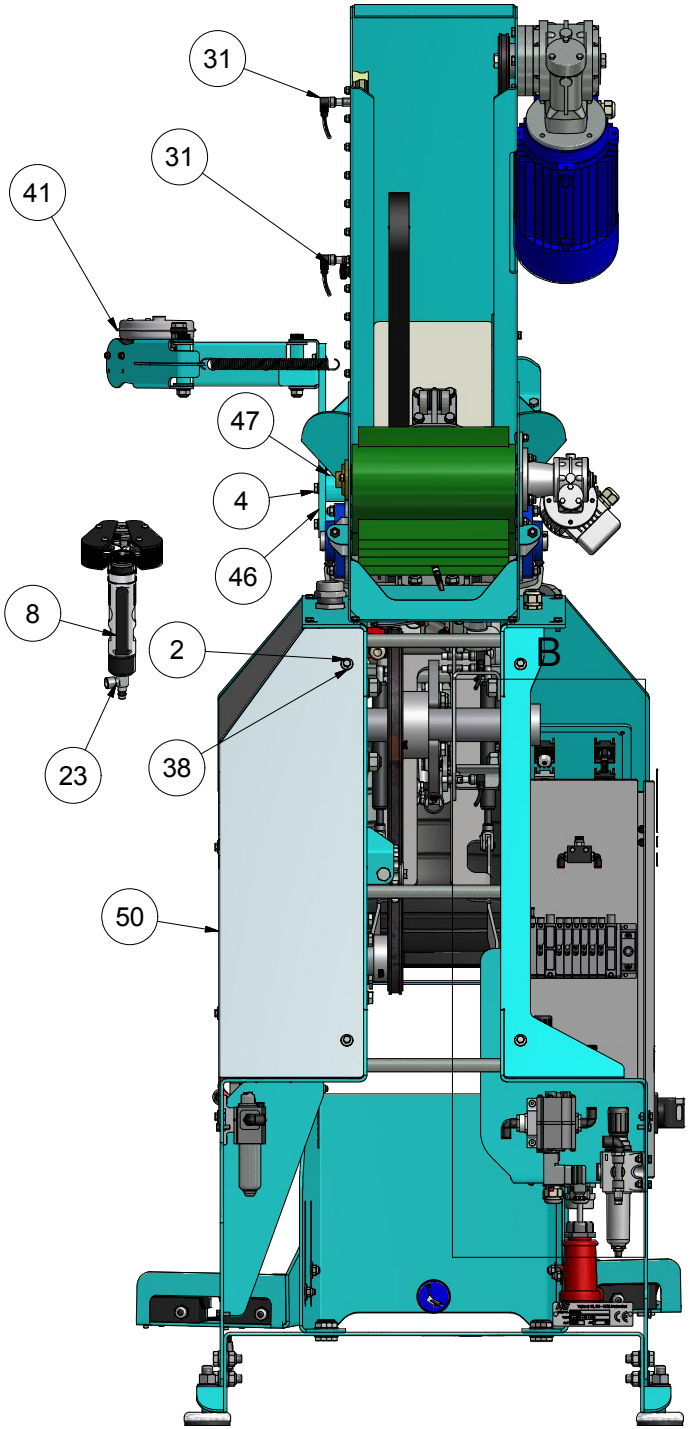

B (1 : 4)

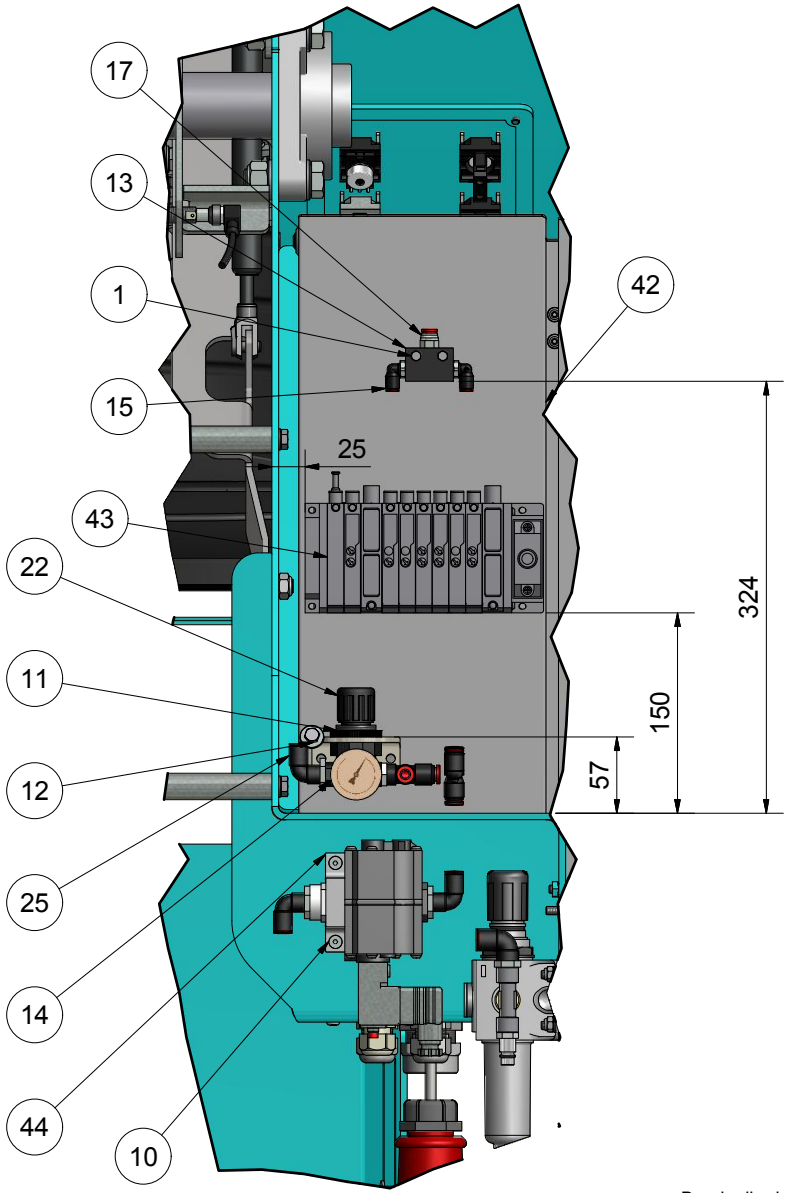

Break all edges

Revision:	Approved	Date:	Revision Description
1	HG	27-09-2015	Revision changed to numeric

The document is strictly confidential and may in no account be copied or disclosed to any third person.

HEDENSTED GRUPPEN

Scale: 1 : 6	Not specificed tolerance according to: DS/ISO 2768-m		Sheet size: A3
	Surface properties: No		Sheet: 2 /3
Part No.: 206330	Material:		
Description 1: HG Quick Skin 14			
Description 2: Incl. pneumatic knife.			

PARTS LIST			
ITEM	QTY	PART NUMBER	DESCRIPTION
1	2	11408020	Hexagon bolt M8x20 FZB
2	6	11410025	Hexagon bolt M10x25 FZB
3	2	17908000	Self-locking nut M8 FZB
4	6	17910000	Self-locking nut M10 FZB
5	4	82108000	Chamfered Washer M8 FZB
6	12	82110000	Chamfered Washer M10 FZB
7	1	M100703	Seat consol assembly
8	1	M100710	Conveyor + Panel assembly
9	1	M100862	Bodypull assembly 15

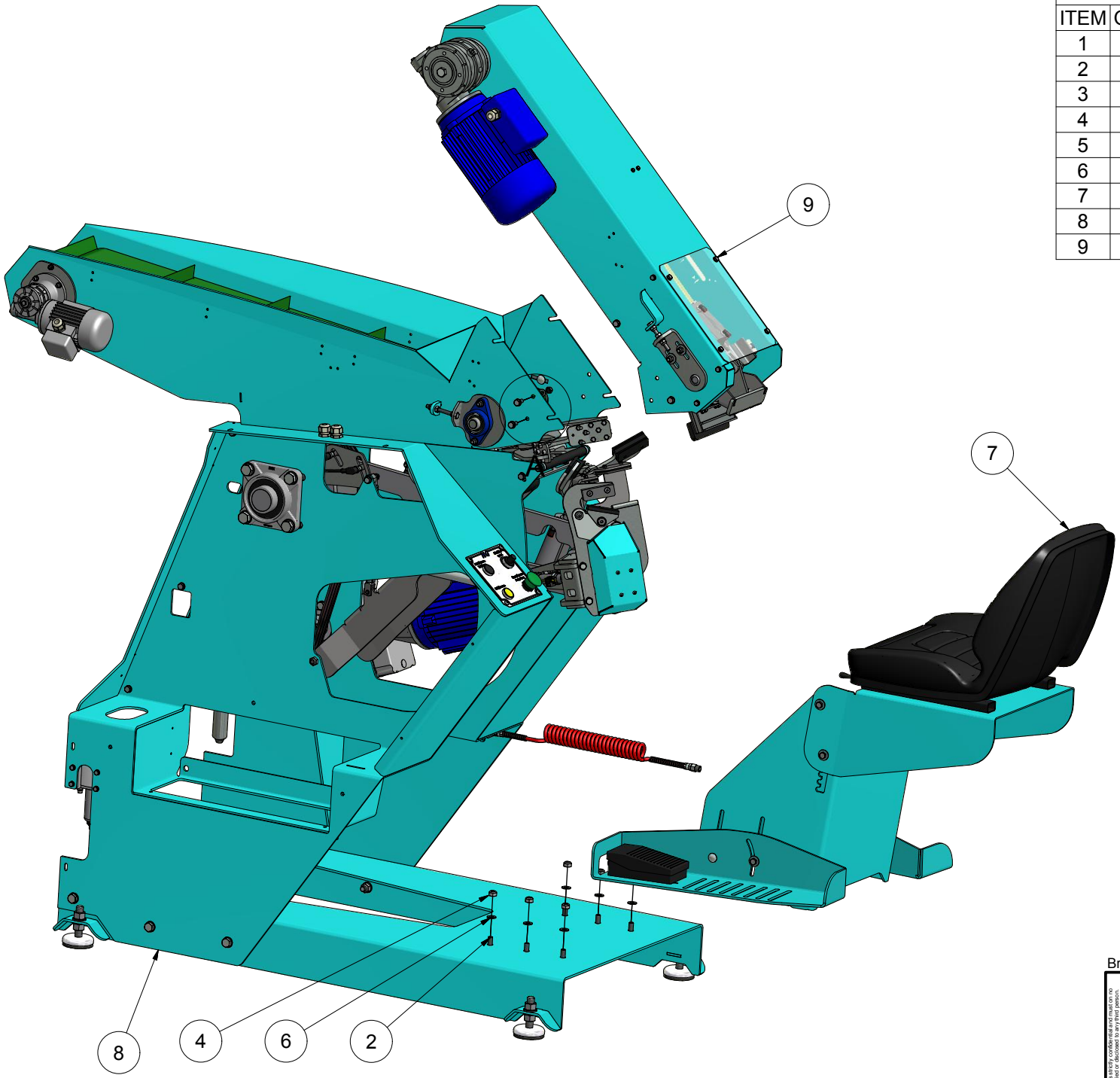

A (1 : 2)

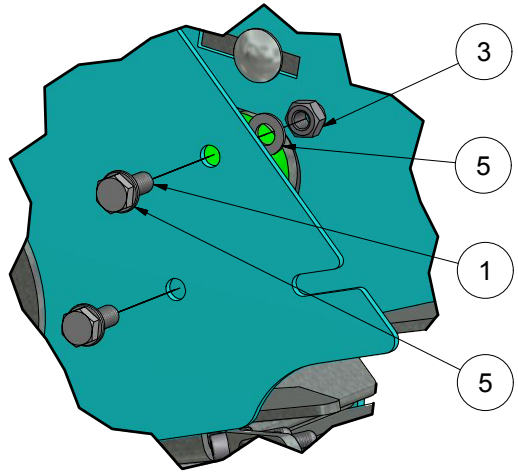

Break all edges

Revision:	Approved	Date:	Revision Description
1	HG	27-09-2015	Revision changed to numeric

The document is strictly confidential and may in no account be copied or discloses to any third person.

HEDENSTED GRUPPEN

HEDENSTED GRUPPEN A/S

Scale: 1 : 9	Not specificed tolerance according to: DS/ISO 2768-m		Sheet size: A3
	Surface properties: No		Sheet: 1 /2
Part No.: M100711	Material:		
Description 1: Body pull + seat assembly			
Description 2:			

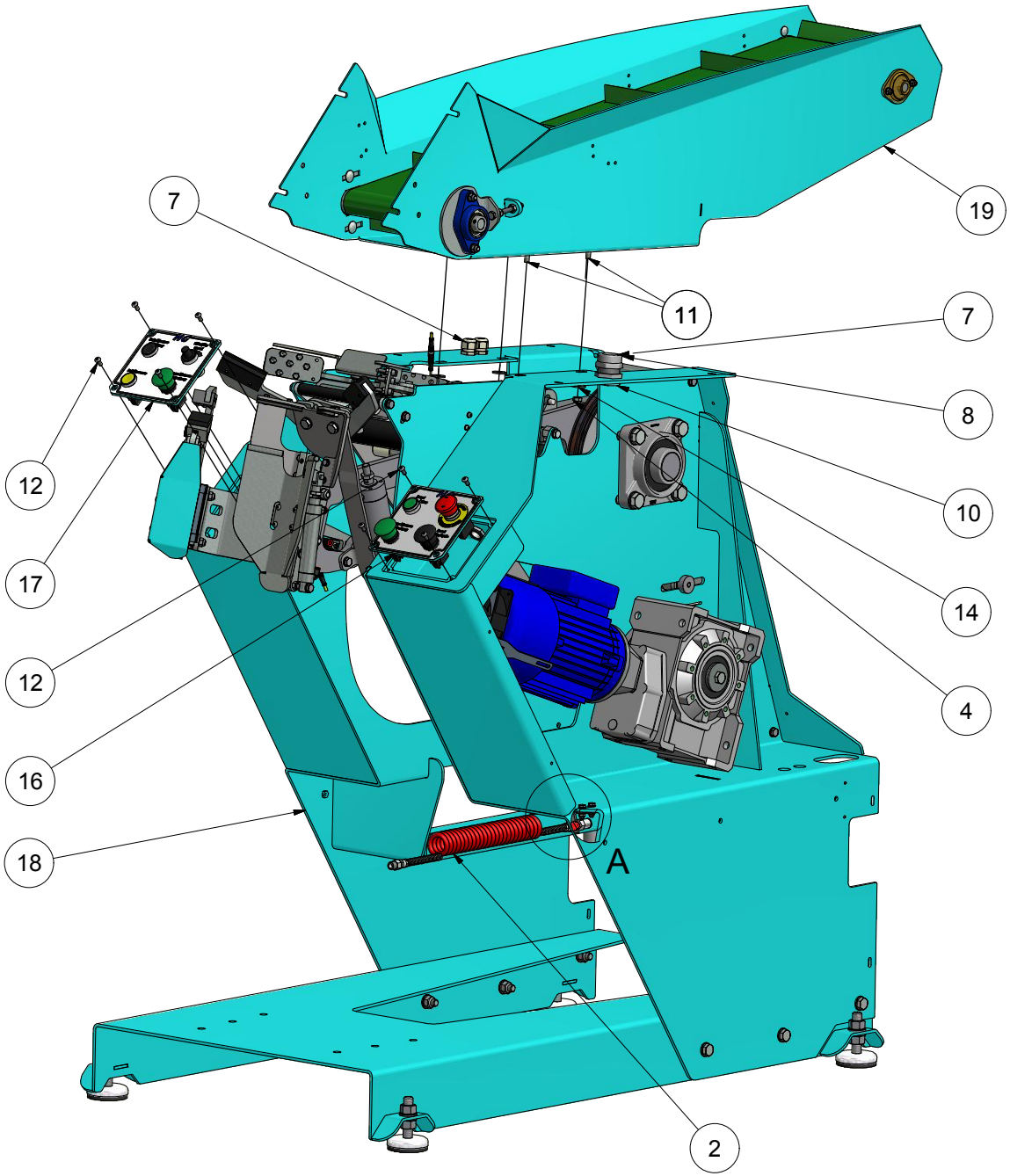

PARTS LIST			
ITEM	QTY	PART NUMBER	DESCRIPTION
1	2	11406020	Hexagon bolt M6x20 FZB
2	1	175806	Springhose Ø10x4m 1_4
3	2	17906000	Self-locking nut M6 FZB
4	4	17908000	Self-locking nut M8 FZB
5	1	215916	Straight connector Ø10 x female1/4"
6	1	600429	Gasket Multihole M32 7x Ø7
7	2	600455	Cabel gland M20 Ø5-12
8	1	600466	Cabel gland M32 15-24,5
9	2	600475	Nut M20 polyamid
10	1	600481	Nut polyamid M32
11	4	64408020	Cup head square neck bolt M8x20 FZB
12	8	76006012	Buttonhead bolt M6x12 FZB
13	4	82106000	Chamfered Washer M6 FZB
14	4	82608000	Washer ø8x24x2 DIN9021A
15	1	M100630	Bracket for air connection
16	1	M100701	Right button Consol
17	1	M100702	Left button Consol
18	1	M100709	Skin pull + Sensor assembly
19	1	M100715	Conveyor assembly

A (1 : 2)

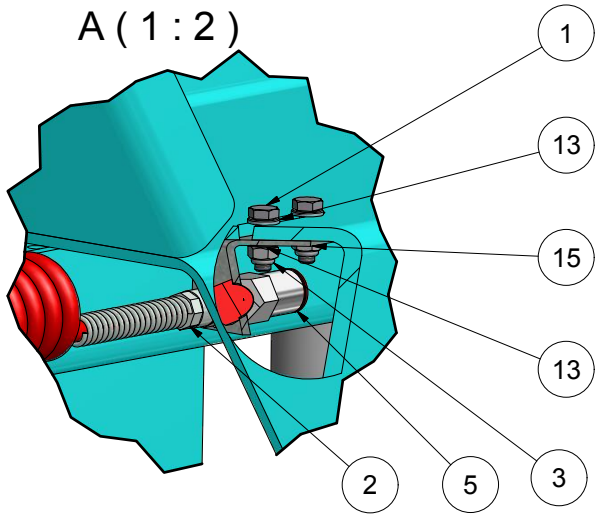

Break all edges

Revision:	Approved	Date:	Revision Description
1	HG	27-09-2015	Revision changed to numeric

The document is strictly confidential and may in no account be copied or disclosed to any third person HEDENSTED GRUPPEN A/S

HEDENSTED GRUPPEN

Scale: 1 : 8	Not specificed tolerance according to: DS/ISO 2768-m	Sheet size: A3
	Surface properties: No	Sheet: 1 /2
Part No.: M100710	Material:	
Description 1: Conveyor + Panel assembly		
Description 2:		

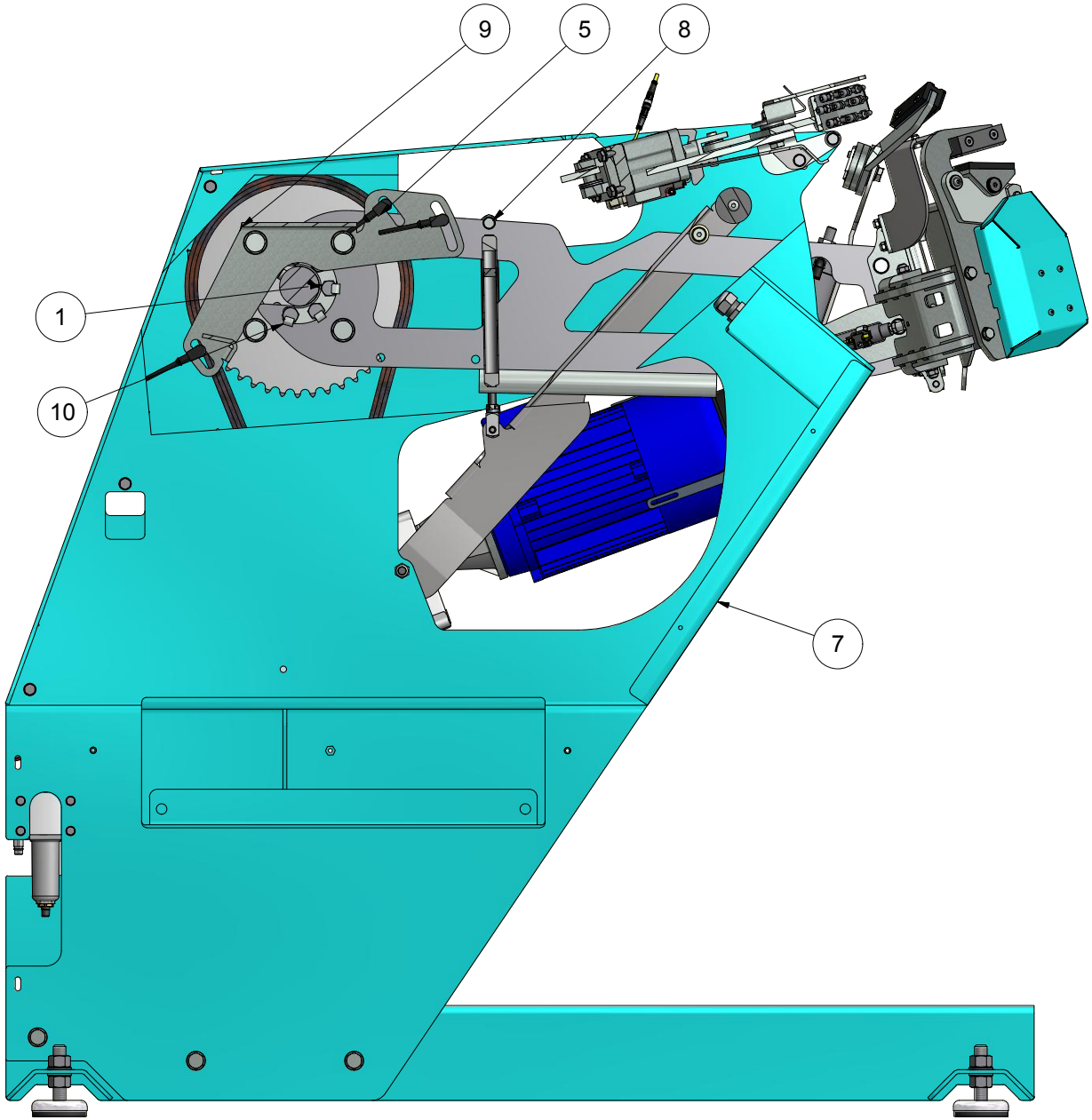

PARTS LIST			
ITEM	QTY	PART NUMBER	DESCRIPTION
1	5	11412040	Hexagon bolt M12x40 FZB
2	2	17916000	Self-locking nut M16 FZB
3	2	600465	Cable gland M25
4	2	600480	Nut M25 polyamid
5	3	600830	Socket M12 angle 4-pol
6	3	601330	Induktion sensor M12 w. socket
7	1	M100708	Gear + Air supply assembly
8	1	M100730	Skin arm assembly
9	1	M100734	Mount for sensors
10	1	M101596	Boltlock plate

Break all edges

Revision:	Approved	Date:	Revision Description
1	HG	27-09-2015	Revision changed to numeric

This document is strictly confidential and may not in no account be copied or discloses to any third person
HEDENSTED GRUPPEN A/S

HEDENSTED GRUPPEN

Scale: 1 : 6	Not specificed tolerance according to: DS/ISO 2768-m		Sheet size: A3
	Surface properties: No		Sheet: 1 /3
Part No.: M100709	Material:		
Description 1: Skin pull + Sensor assembly			
Description 2: HG quick skin 14			

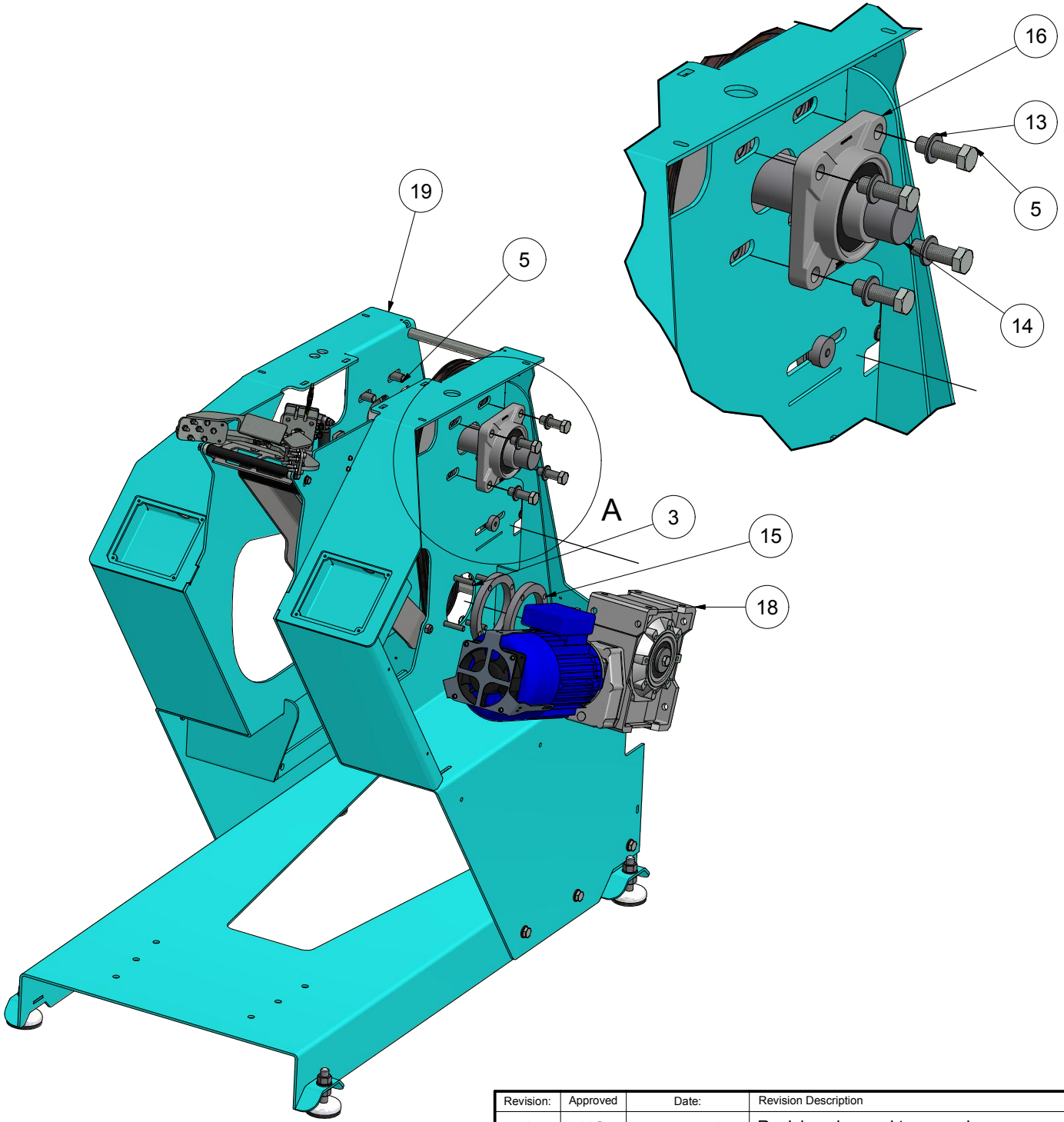

PARTS LIST

ITEM	QTY	PART NUMBER	DESCRIPTION
1	2	10508020	Stop screw M8x20 black
2	4	11406020	Hexagon bolt M6x20 FZB
3	4	11410050	Hexagon bolt M10x50 FZB
4	1	11412080	Hexagon bolt M12x80 FZB
5	8	11416050	Hexagon bolt M16x50 FZB
6	1	1512000	Nut M12 FZB
7	4	17906000	Self-locking nut M6 FZB
8	2	17912000	Self-locking nut M12 FZB
9	6	17916000	Self-locking nut M16 FZB
10	2	20405010	Hexagon countersunk head M5x10 FZB
11	8	82106000	Chamfered Washer M6 FZB
12	4	82110000	Chamfered Washer M10 FZB
13	14	82116000	Chamfered Washer M16 FZB
14	1	M100612	Main shaft
15	2	M100616	Motor spacer
16	2	M100636	Bearing UCF 210 50MM FS
17	1	M100679	Main chain wheel_12B1-Z45
18	1	M100698	Main gear assembly
19	1	M100699	Skin roll+Body clamp assembly
20	1	M100700	Air supply assembly
21	1	M100742	Key 14x9x70 DIN-6885A
22	1	M100743	Z13 chain tensioner
23	1	M100886	Lubricator assembly
24	1,28 m	M200085	Connetion joint for 12B1 chain
25	1	M200087	Connetion joint for 12B1 chain

Break all edges

Revision:	Approved	Date:	Revision Description
1	HG	27-09-2015	Revision changed to numeric

The document is strictly confidential and may not be in no account be copied or discloses to any third person HEDENSTED GRUPPEN A/S

HEDENSTED GRUPPEN

Scale: 1 : 8	Not specificed tolerance according to: DS/ISO 2768-m	Sheet size: A3
	Surface properties: No	Sheet: 1 /2
Part No.: M100708	Material:	
Description 1: Gear + Air supply assembly		
Description 2: HG quick skin 14		

D-D (1 : 8)

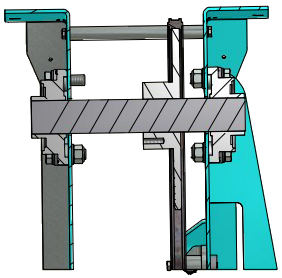

B-B (1 : 8)

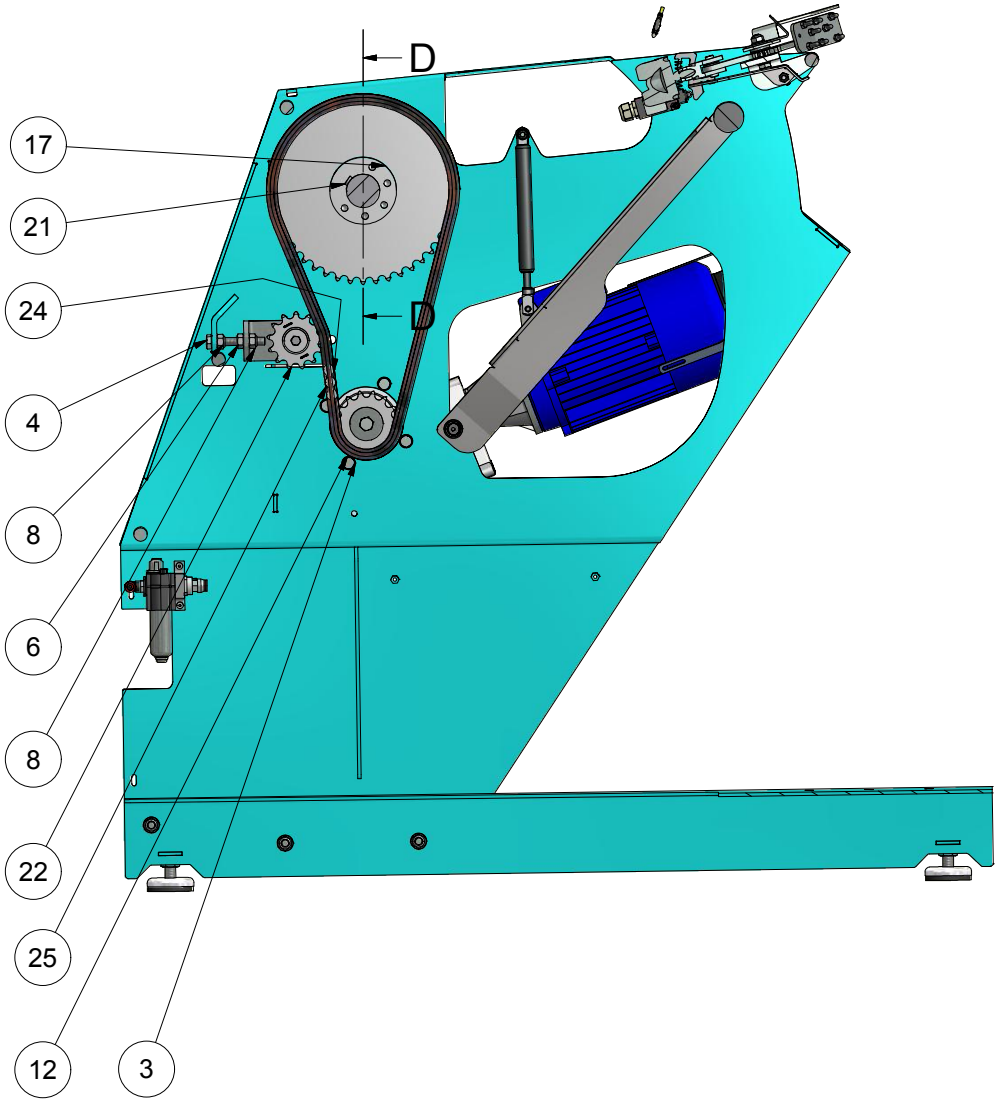

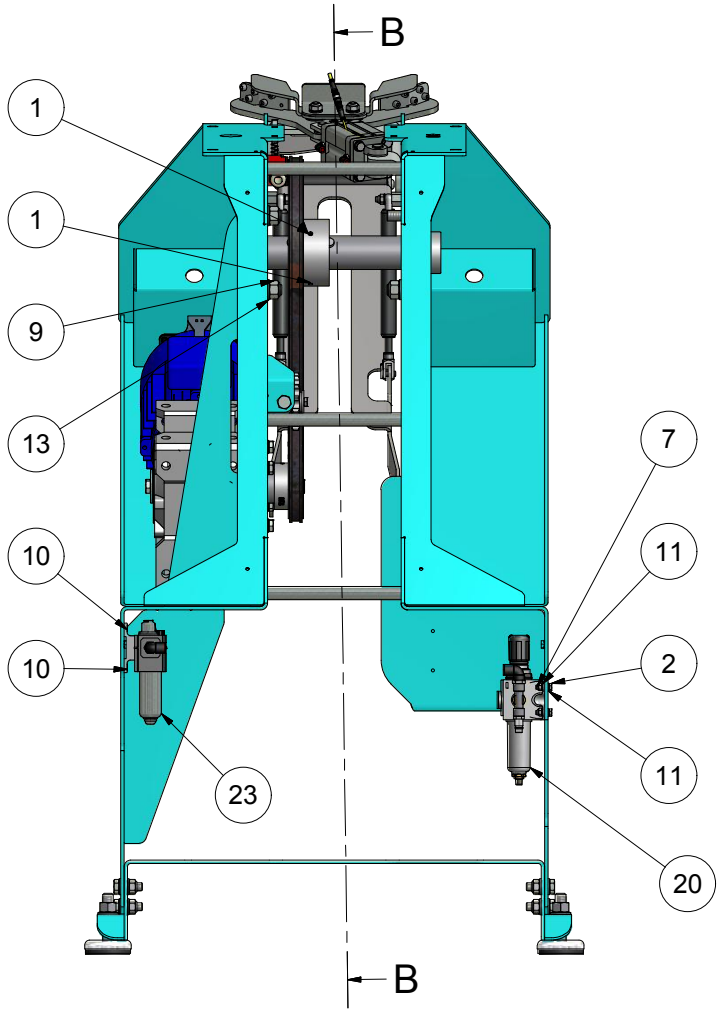

Break all edges

Revision:	Approved	Date:	Revision Description
1	HG	27-09-2015	Revision changed to numeric

The document is strictly confidential and may in no account be copied or discloses to any third person HEDENSTED GRUPPEN A/S

HEDENSTED GRUPPEN

Scale: 1 : 8	Not specificed tolerance according to: DS/ISO 2768-m	Sheet size: A3
	Surface properties: No	Sheet: 2 /2
Part No.: M100708	Material:	
Description 1: Gear + Air supply assembly		
Description 2: HG quick skin 14		

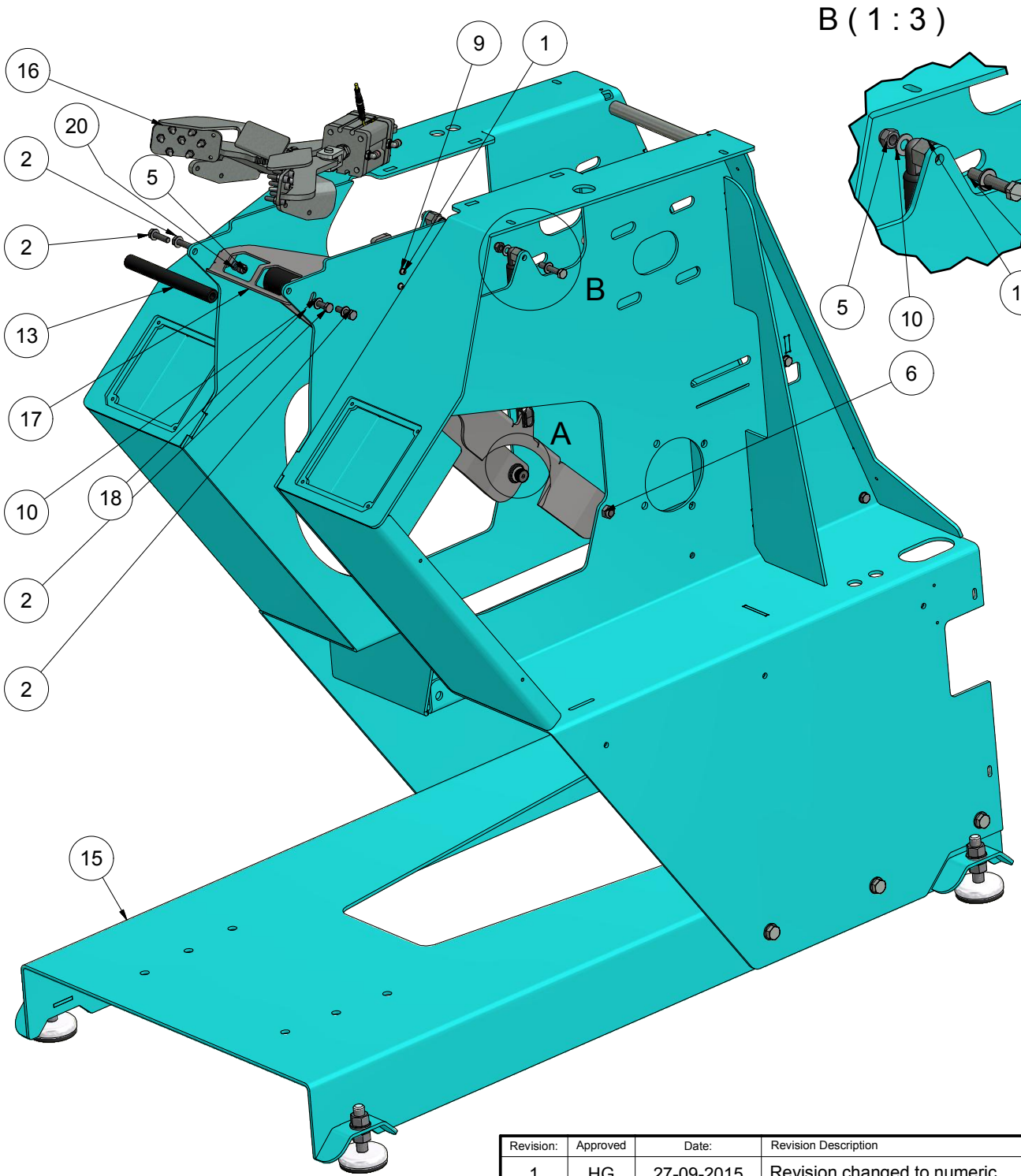

B (1 : 3)

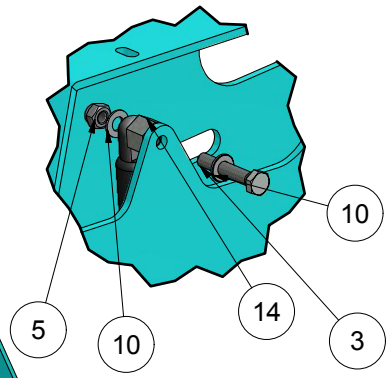

PARTS LIST			
ITEM	QTY	PART NUMBER	DESCRIPTION
1	2	10204035	Hexagon cylinder head M4x35 FZB
2	4	11408030	Hexagon bolt M8x30 FZB
3	2	11408045	Hexagon bolt M8x45 FZB
4	2	17904000	Self-locking nut M4 FZB
5	4	17908000	Self-locking nut M8 FZB
6	2	17910000	Self-locking nut M10 FZB
7	2	20210016	Fitting bolt M10-12x16mm
8	1	600455	Cabel gland M20 Ø5-12
9	4	82104000	Chamfered Washer M4 FZB
10	8	82108000	Chamfered Washer M8 FZB
11	4	82112000	Chamfered Washer M12 FZB
12	2	82114000	Chamfered Washer M14 FZB
13	1	M100619	Roll for body
14	2	M100683	Nut for damper
15	1	M100692	Base Frame assembly
16	1	M100713	Body clamp
17	1	M100877	Safety plate
18	1	M100884	Skin roll assembly 15
19	1	M101094	Spring Ø0,97 D10,67 L 57,15
20	2	M101595	Spacer for safety plate
21	1	M101617	Bernstien End stop, overload switch

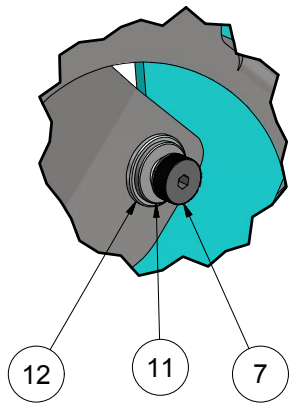

A (1 : 2)

Break all edges

Revision:	Approved	Date:	Revision Description
1	HG	27-09-2015	Revision changed to numeric

The document is strictly confidential and may not be in no account be copied or discloses to any third person HEDENSTED GRUPPEN A/S

HEDENSTED GRUPPEN

Scale: 1 : 6	Not specificed tolerance according to: DS/ISO 2768-m		Sheet size: A3
	Surface properties: No		Sheet: 1 /2
Part No.: M100699	Material:		
Description 1: Skin roll+Body clamp assembly			
Description 2: HG quick skin 14			

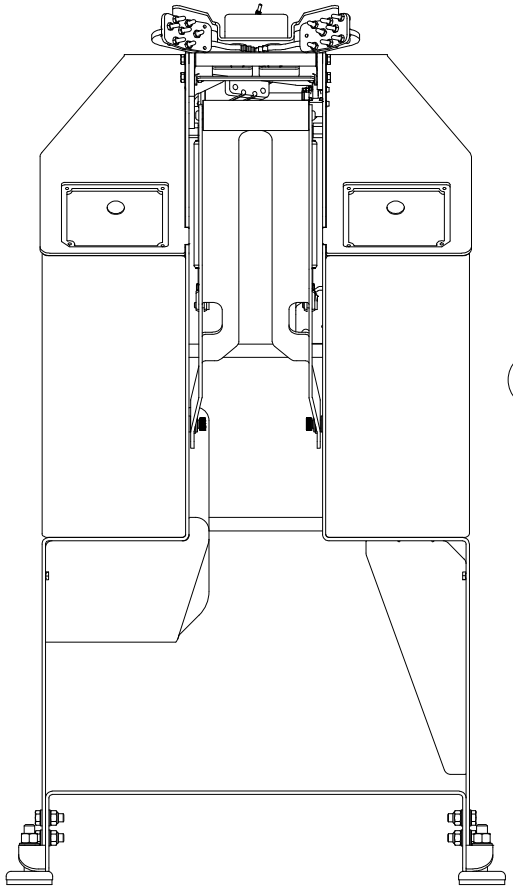

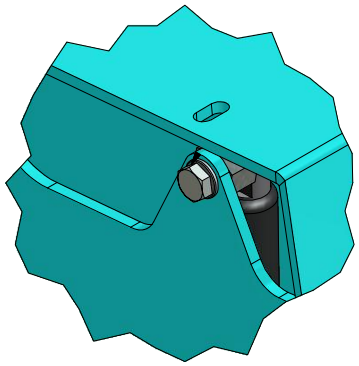

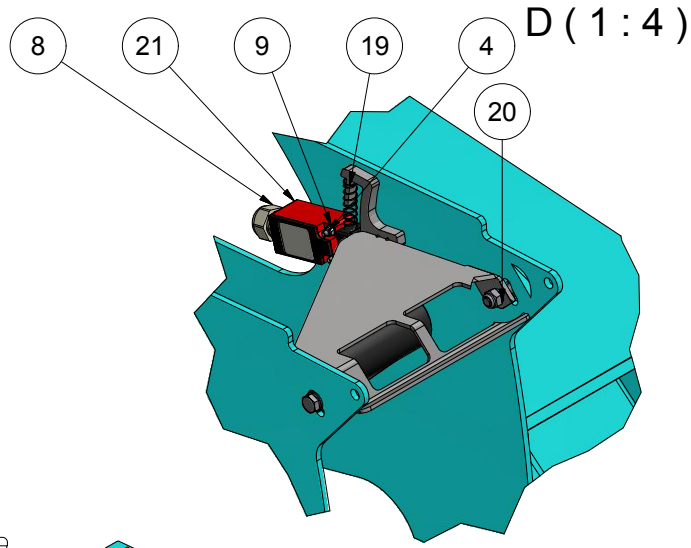

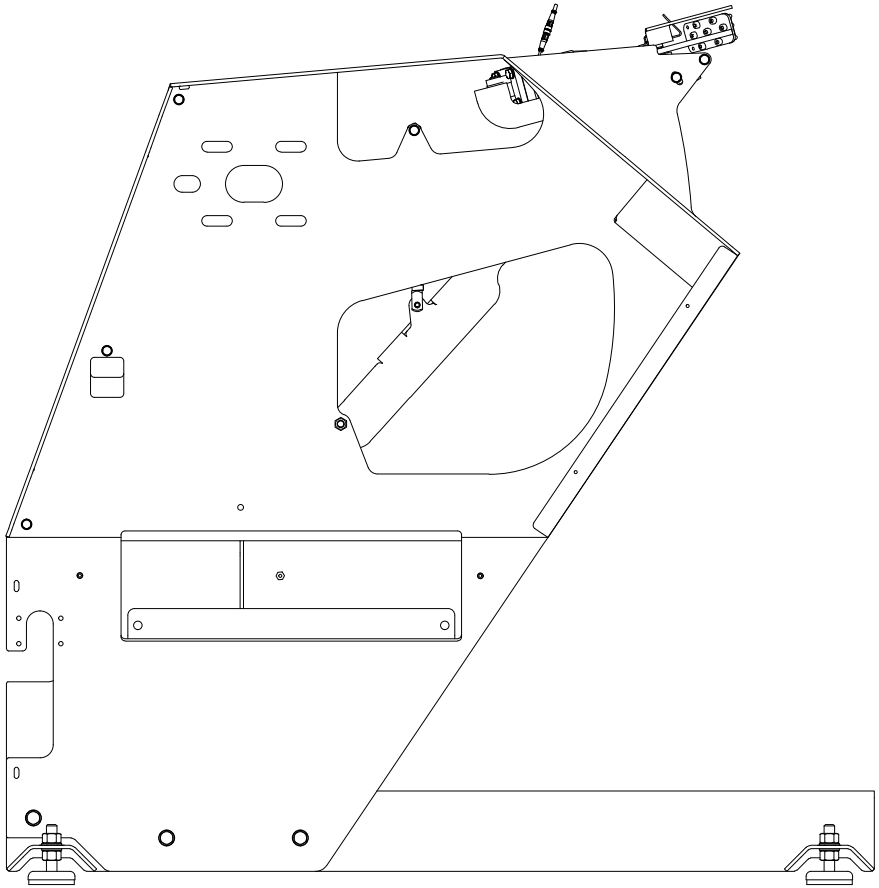

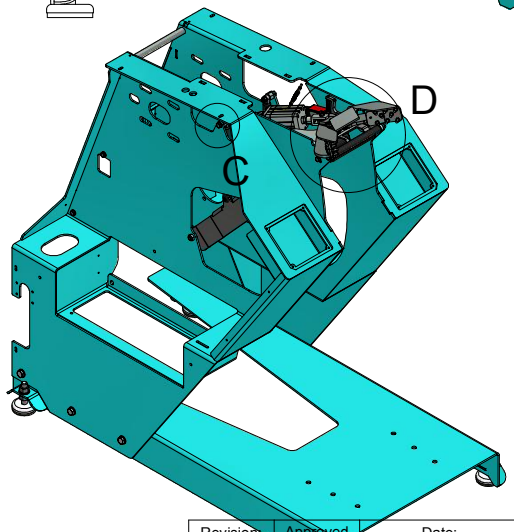

Break all edges

HEDENSTED GRUPPEN	Scale: 1 : 6	Not specificed tolerance according to: DS/ISO 2768-m		Sheet size: A3
		Surface properties: No		Sheet: 2 /2
Part No.: M100699	Material:			
Description 1: Skin roll+Body clamp assembly				
Description 2: HG quick skin 14				

The document is strictly confidential and may not in no account be copied or disclosed to any third person.
HEDENSTED GRUPPEN A/S

Revision:	Approved	Date:	Revision Description
1		27-09-2015	Revision changed to numeric

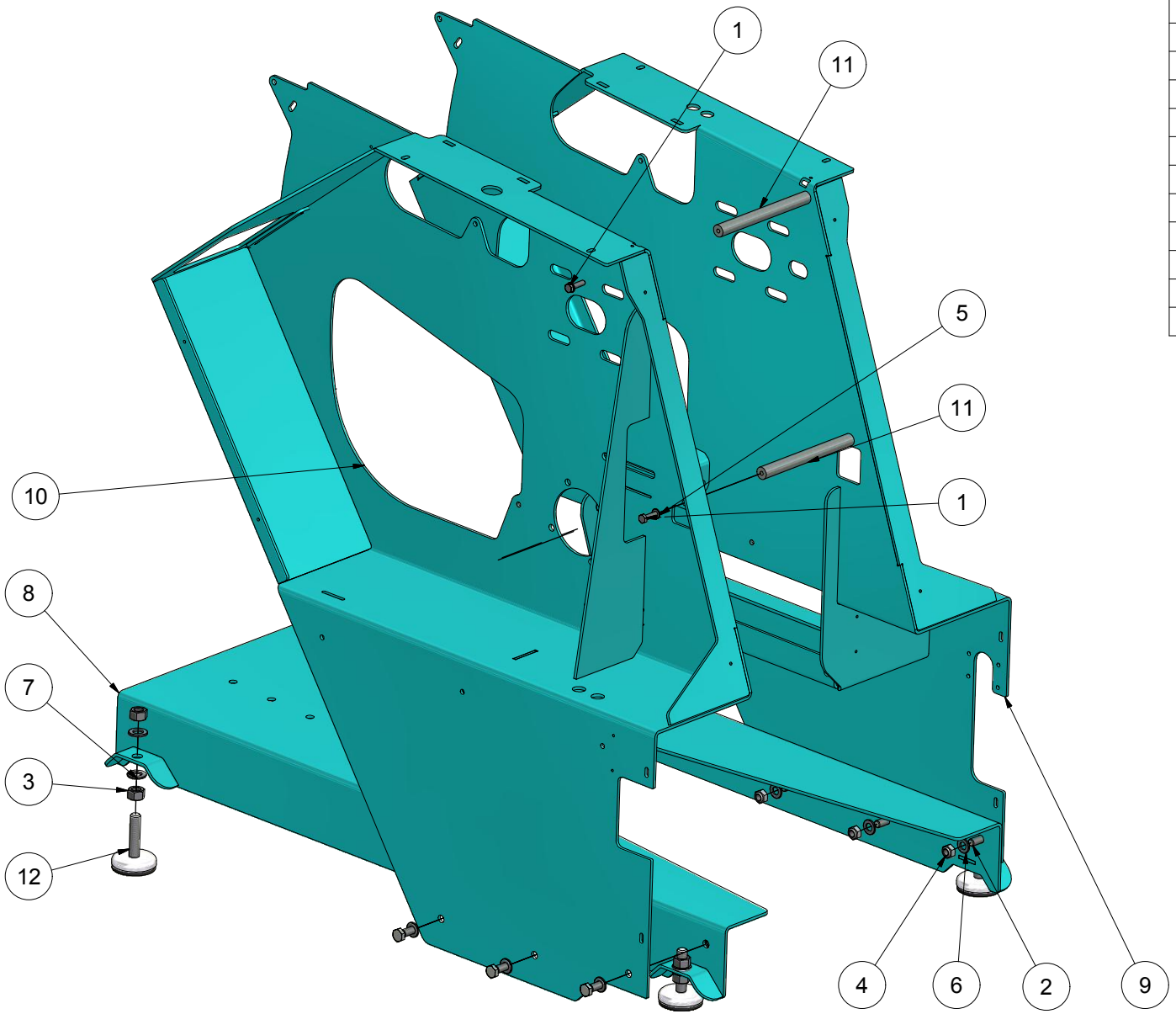

PARTS LIST			
ITEM	QTY	PART NUMBER	DESCRIPTION
1	4	11408030	Hexagon bolt M8x30 FZB
2	6	11412035	Hexagon bolt M12x35 FZB
3	8	1516000	Nut M16 FZB
4	6	17912000	Self-locking nut M12 FZB
5	4	82108000	Washer M8 FZB
6	12	82112000	Washer M12 FZB
7	8	82116000	Washer M16 FZB
8	1	M100631	Bottom plate assembly
9	1	M100653	Frame side assembly - Left
10	1	M100654	Frame side assembly - Right
11	2	M100655	Frame spacer
12	4	M200102	Machine shoe

Alle kanter reifes
Breake all edges

REV	DESCRIPTION	DATE	APPROVED
A	Made	25-06-2014	MRH
B	Spacer added	06-01-2015	MRH

REVISION HISTORY

The document is strictly confidential and may in no account be copied or disclosed to any third person.
HEDENSTED GRUPPEN A/S

Hedensted Gruppen

Scale: 1 : 7

Ikke angivet tolerancer iht./ Not specificed tolerance according to: DS/ISO 2768-m

Sheet size: A3

Overfl. beskaffenhed/Surface properties: No

Sheet: 1 /2

Part No.: M100692

Material:

Description: Base Frame assembly

Description: HG Quick skin 14

PARTS LIST			
ITEM	QTY	PART NUMBER	DESCRIPTION
1	2	423423	Slide Bearing PAF 12070 P10
2	2	76008020	Bolt buttonhead 8x20 FZB
3	1	M100620	Roll for skin
4	2	M100691	Gas spring C5A1-42-145-384--0XX/400N(00)
5	1	M100883	Roll flange for 15

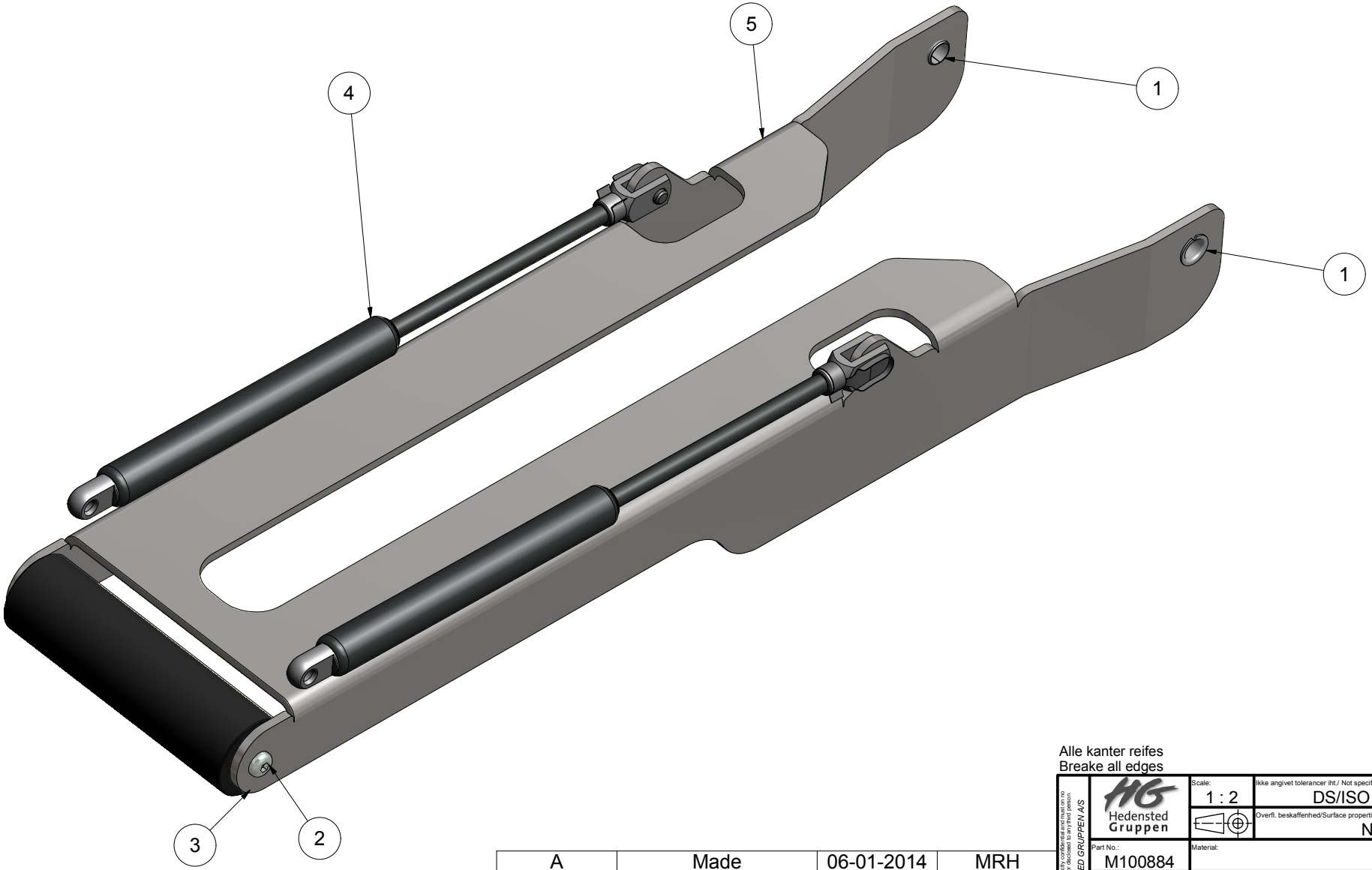

Alle kanter reifes
Breake all edges

REV	DESCRIPTION	DATE	APPROVED
A	Made	06-01-2014	MRH
B	Gas sprign changed	29-01-2015	MRH

REVISION HISTORY

The document is strictly confidential and may not on no account be copied or disclosed to any third person.
HEDENSTED GRUPPEN A/S

Hedensted Gruppen

Scale: 1 : 2	Ikke angivet tolerancer iht./ Not specificed tolerance according to: DS/ISO 2768-m	Sheet size: A3
	Overfl. beskaffenhed/Surface properties: No	Sheet: 1 /1
Part No.: M100884	Material:	
Description: Skin roll assembly 15		
Description:		

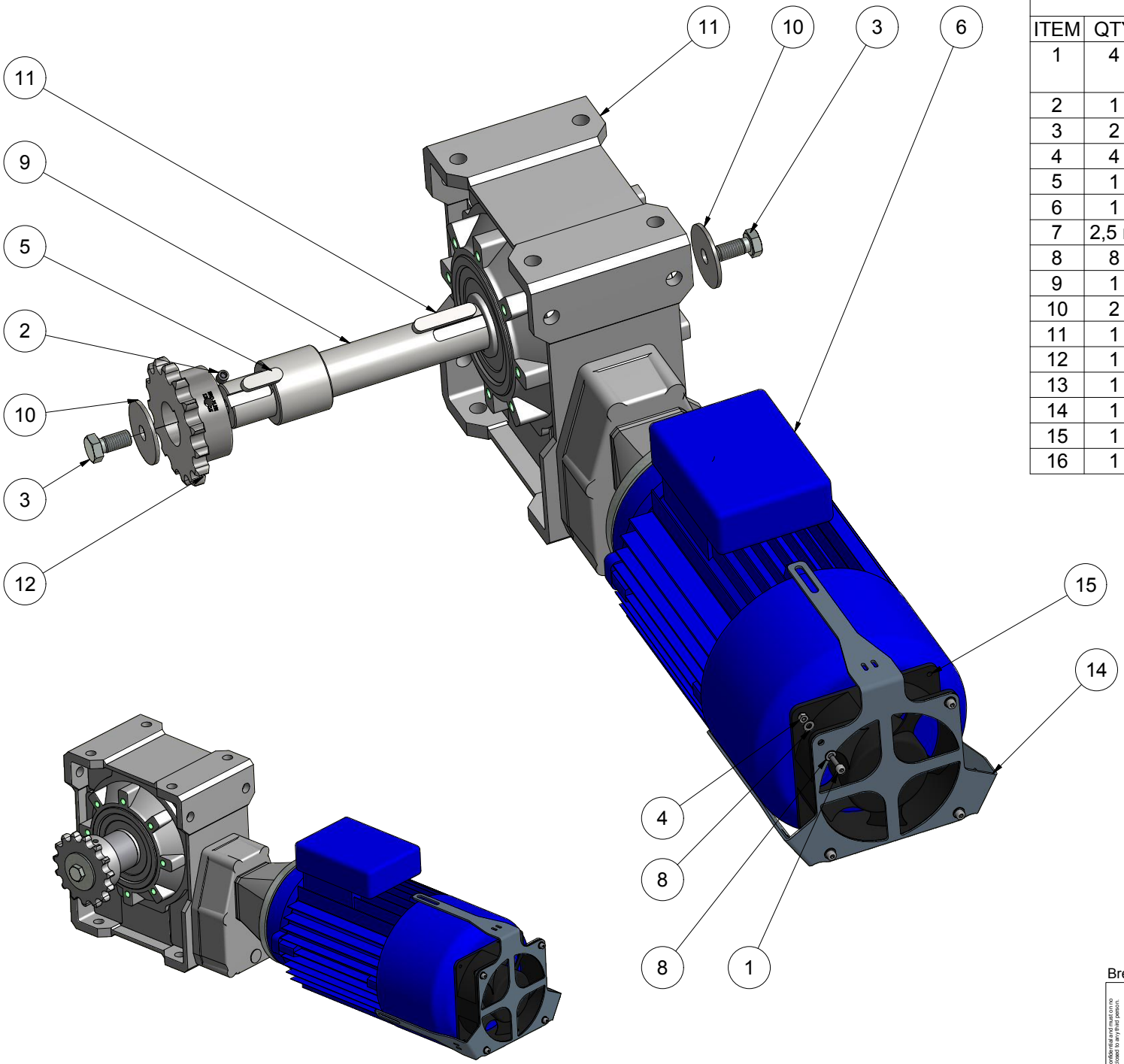

PARTS LIST			
ITEM	QTY	PART NUMBER	DESCRIPTION
1	4	10204014	Hexagon cylinder head M4x14 FZB
2	1	10508012	Stop screw M8x12 black
3	2	11412025	Hexagon bolt M12x25 FZB
4	4	17904000	Self-locking nut M4 FZB
5	1	197039	Key 10x8x32 DIN-6885A
6	1	222381	Motor T90L4BRB14B115 w/breake
7	2,5 m	600634	Cable 2x0,75 without screen
8	8	82104000	Chamfered Washer M4 FZB
9	1	M100611	Main gear shaft
10	2	M100624	Motor washer
11	1	M100658	Gear - Tramec HF90 1:120
12	1	M100680	Chain wheel 12B-Z-1-15 Ø35H7
13	1	M100726	Key 10x8x50 DIN-6885A
14	1	M101612	Mount for fan
15	1	M101613	Motor fan Ø115 220v
16	1	M101724	Cable for sunon fan 0,3m

Break all edges

Revision:	Approved	Date:	Revision Description
1	MRH	20-01-2016	Fan added

The document is strictly confidential and may not in no account be copied or discloses to any third person.
HEDENSTED GRUPPEN A/S

HEDENSTED GRUPPEN

Scale: 1 : 3	Not specificed tolerance according to: DS/ISO 2768-m		Sheet size: A3
	Surface properties: No		Sheet: 1 /2
Part No.: M100698	Material:		
Description 1: Main gear assembly			
Description 2: HG quick skin 14			

PARTS LIST			
ITEM	QTY	PART NUMBER	DESCRIPTION
1	1	197329	Filter regulator 1/4" 10bar
2	1	215778	Swirvel elbow Ø10 1-4
3	1	216537	Swirvel elbow Ø8 1/4"
4	1	216598	T-connector 1_4
5	1	217051	Quick release coupling male 1/4"

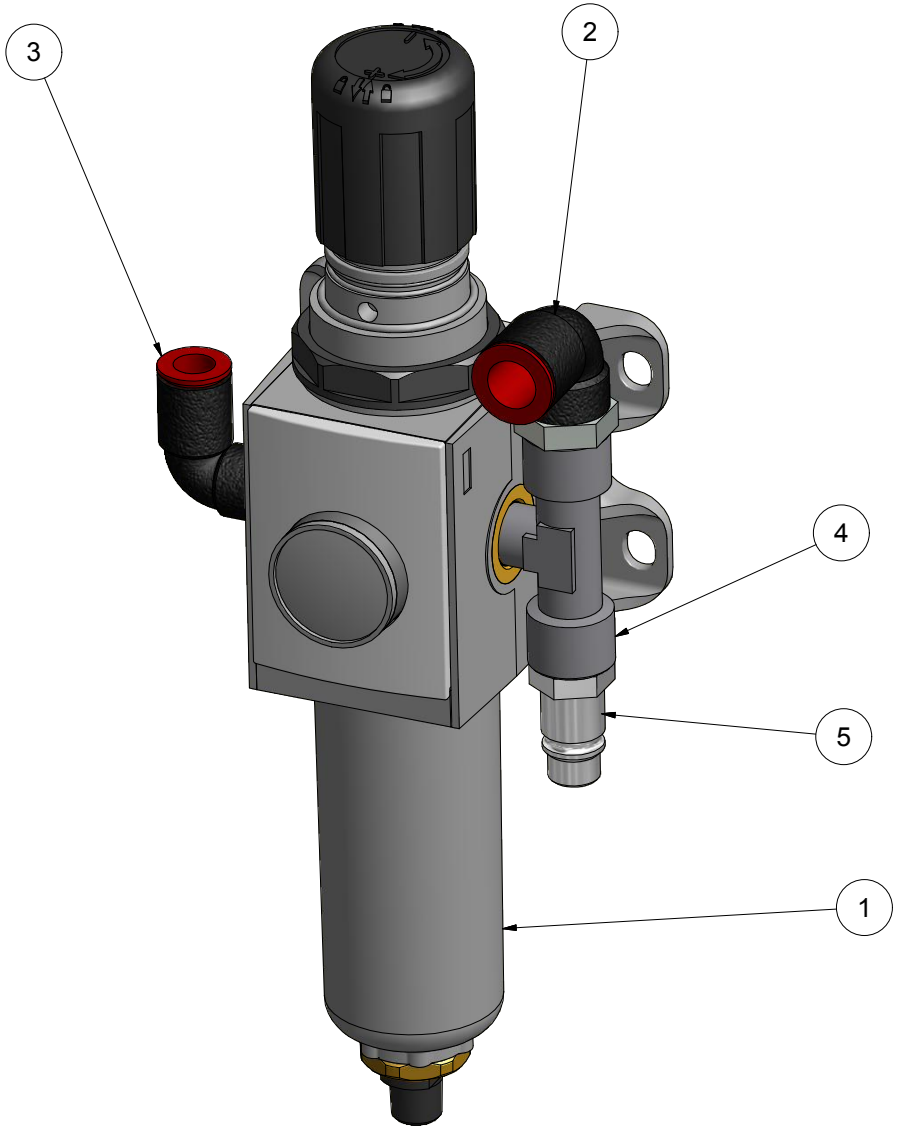

Alle kanter reifes
Breake all edges

Scale: 1 : 1	Ikke angivet tolerancer iht./ Not specificed tolerance according to: DS/ISO 2768-m	Sheet size: A3
	Overfl. beskaffenhed/Surface properties: No	Sheet: 1 /2
Part No.: M100700	Material:	
Description: Air supply assembly		
Description:		

Hedensted Gruppen

The document is strictly confidential and may in no account be copied or discloses to any third person.
HEDENSTED GRUPPEN A/S

REV	DESCRIPTION	DATE	APPROVED
A	Made	26-06-2014	MRH
B	Fittings changed	05-01-2015	MRH

REVISION HISTORY

PARTS LIST			
ITEM	QTY	PART NUMBER	DESCRIPTION
1	1	600100	Emergencystop button ZB4BS844
2	2	600176	Switch component ZB4BZ101 1NO
3	1	600350	Button w/light XB4BW33B5 green
4	1	600375	Contact block ZB4BZ104 2NC
5	1	601115	Push Button ZB4BC2 Ø40 Black
6	1	601120	Push Button ZB4BC3 Ø40 Green
7	1	M100643	Button plate
8	1	M100657	Label for buttons - Right

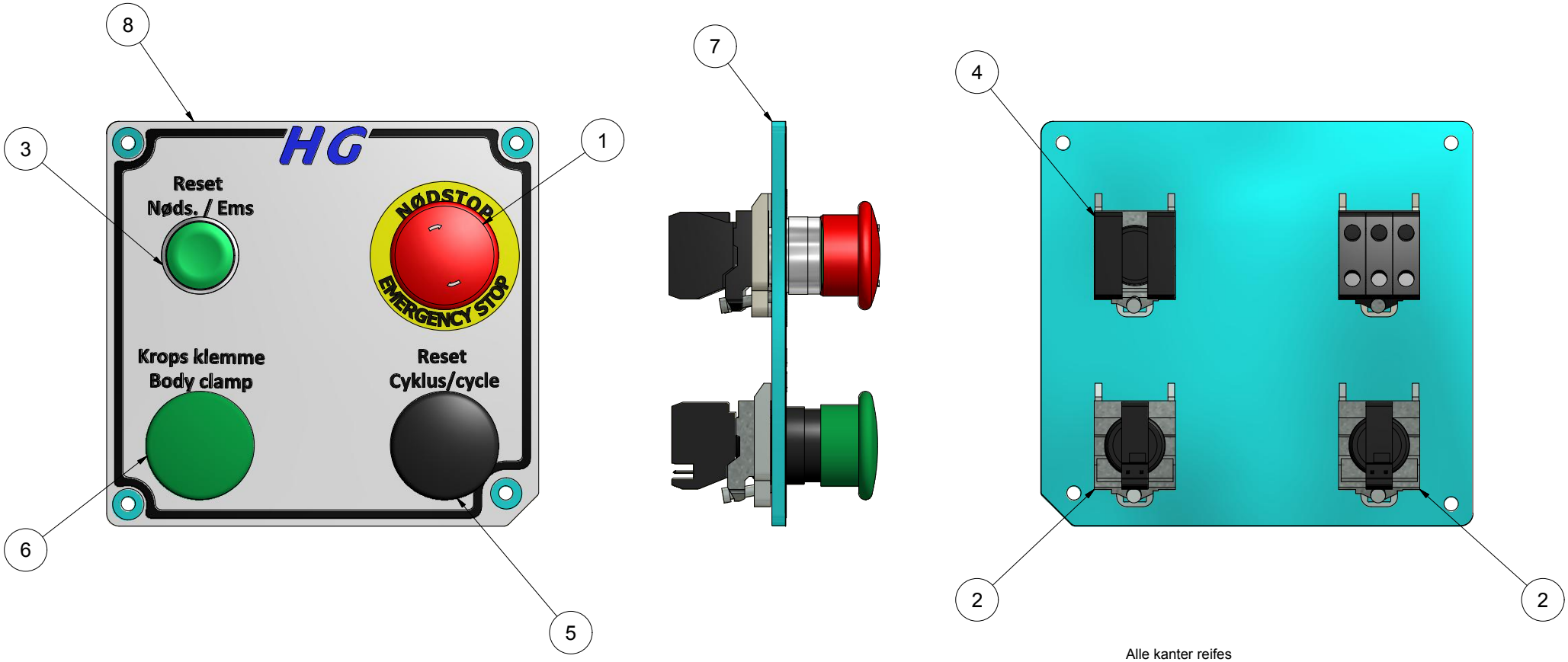

Alle kanter reifes
Breake all edges

REV	DESCRIPTION	DATE	APPROVED
A	Made	04-08-2014	MRH

REVISION HISTORY

The document is strictly confidential and may in no account be copied or discloses to any third person.
HEDENSTED GRUPPEN A/S

HG Hedensted Gruppen

Scale:	Ikke angivet tolerancer iht./ Not specificed tolerance according to: DS/ISO 2768-m	Sheet size: A3
	Overfl. beskaffenhed/Surface properties: No	Sheet: 1 /1
Part No.: M100701	Material:	
Description: Right button Consol		
Description: HG quick skin 14		

PARTS LIST			
ITEM	QTY	PART NUMBER	DESCRIPTION
1	1	600176	Switch component ZB4BZ101 1NO
2	1	600315	Pote.meter 388 468-8698 1K ohm
3	1	600335	Push-button XB4BA51 Yello
4	1	600655	Handle ZB4BD912 Ø6
5	1	600786	Push-button XB4BA21 Plan Black
6	1	601120	Push Button ZB4BC3 Ø40 Green
7	1	M100643	Button plate
8	1	M100656	Label for buttons - Left

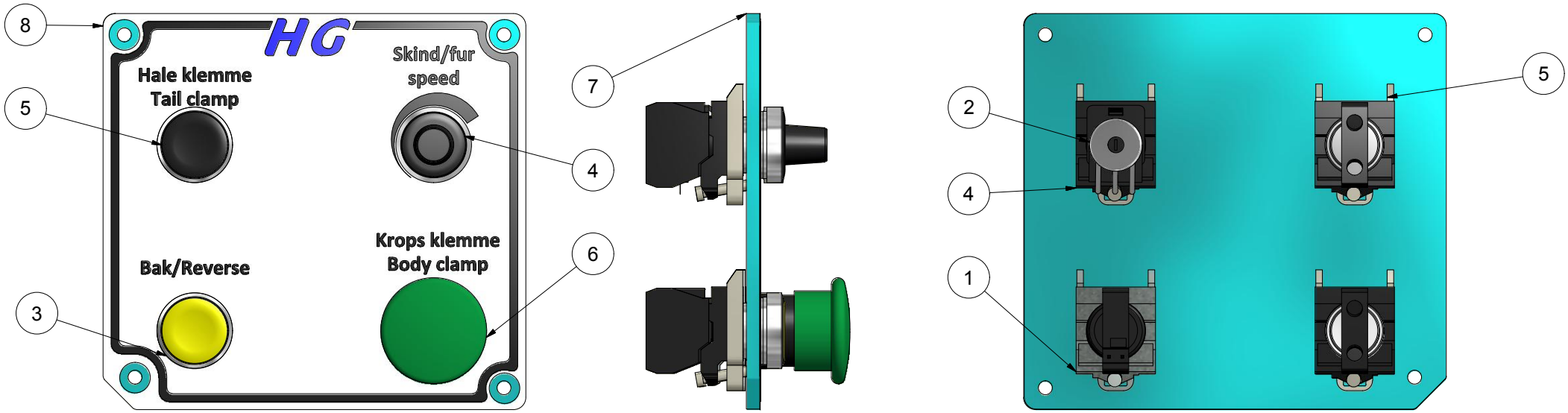

Alle kanter reifes
Breake all edges

HG Hedensted Gruppen	Scale:	Ikke angivet tolerancer iht./ Not specificed tolerance according to: DS/ISO 2768-m	Sheet size: A3
		Overfl. beskaffenhed/Surface properties: No	Sheet: 1 /1
Part No.: M100702	Material:		
Description: Left button Consol			
Description:			

The document is strictly confidential and must on no account be copied or discloses to any third person. HEDENSTED GRUPPEN A/S

REVISION HISTORY			
A	Made	04-08-2014	MRH
REV	DESCRIPTION	DATE	APPROVED

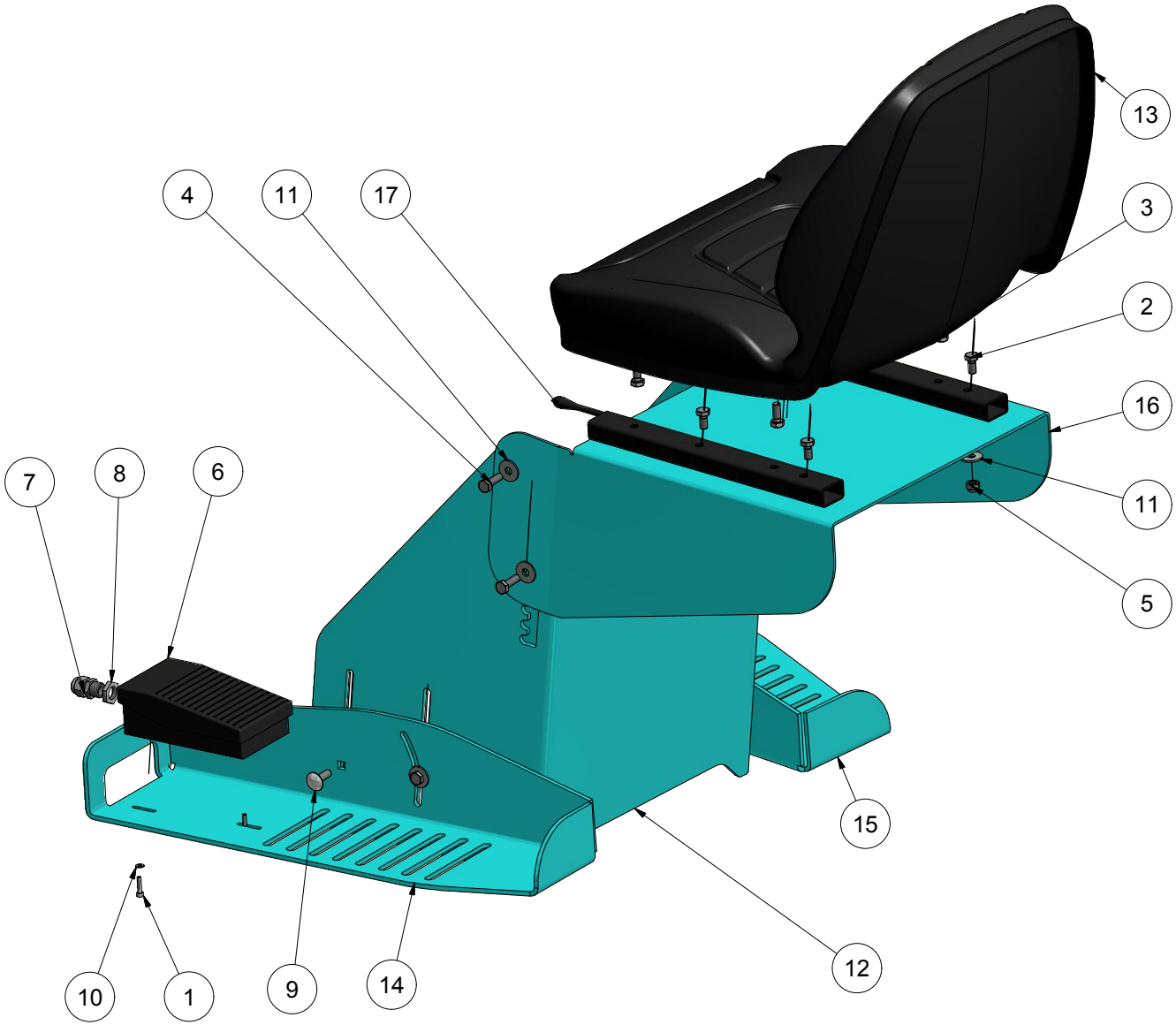

PARTS LIST			
ITEM	QTY	PART NUMBER	DESCRIPTION
1	6	10204018	Bolt.unbraco cyl 4x18 FZB
2	4	11408016	Hexagon bolt M8x16 FZB
3	4	11408020	Hexagon bolt M8x20 FZB
4	6	11408025	Hexagon bolt M8x25 FZB
5	12	17908000	Self-locking nut M8 FZB
6	3	489105	Foot pedal XPEA110
7	3	600460	Cable gland M16
8	3	600470	Nut M16 polyamid
9	2	64408025	Cup head square neck bolt M8x25 FZB
10	6	82104000	Washer M4 FZB
11	18	82608000	Washer ø8x24x2 DIN9021A
12	1	M100625	Leg guard
13	1	M100642	Napa seat - CNP5590000
14	1	M100651	Foot plate Left
15	1	M100652	Foot plate Right
16	1	M100661	Seat consol
17	1	M100729	Rails for Seat

Alle kanter reifes
Breake all edges

A	Made	26-06-2014	MRH
REV	DESCRIPTION	DATE	APPROVED
REVISION HISTORY			

The document is strictly confidential and may in no account be copied or discloses to any third person.
HEDENSTED GRUPPEN A/S

Hedensted Gruppen

Scale: 1 : 5	Ikke angivet tolerancer iht./ Not specificed tolerance according to: DS/ISO 2768-m	Sheet size: A3
	Overfl. beskaffenhed/Surface properties: No	Sheet: 1 /1
Part No.: M100703	Material:	
Description: Seat consol assembly		
Description: HG quick skin 14		

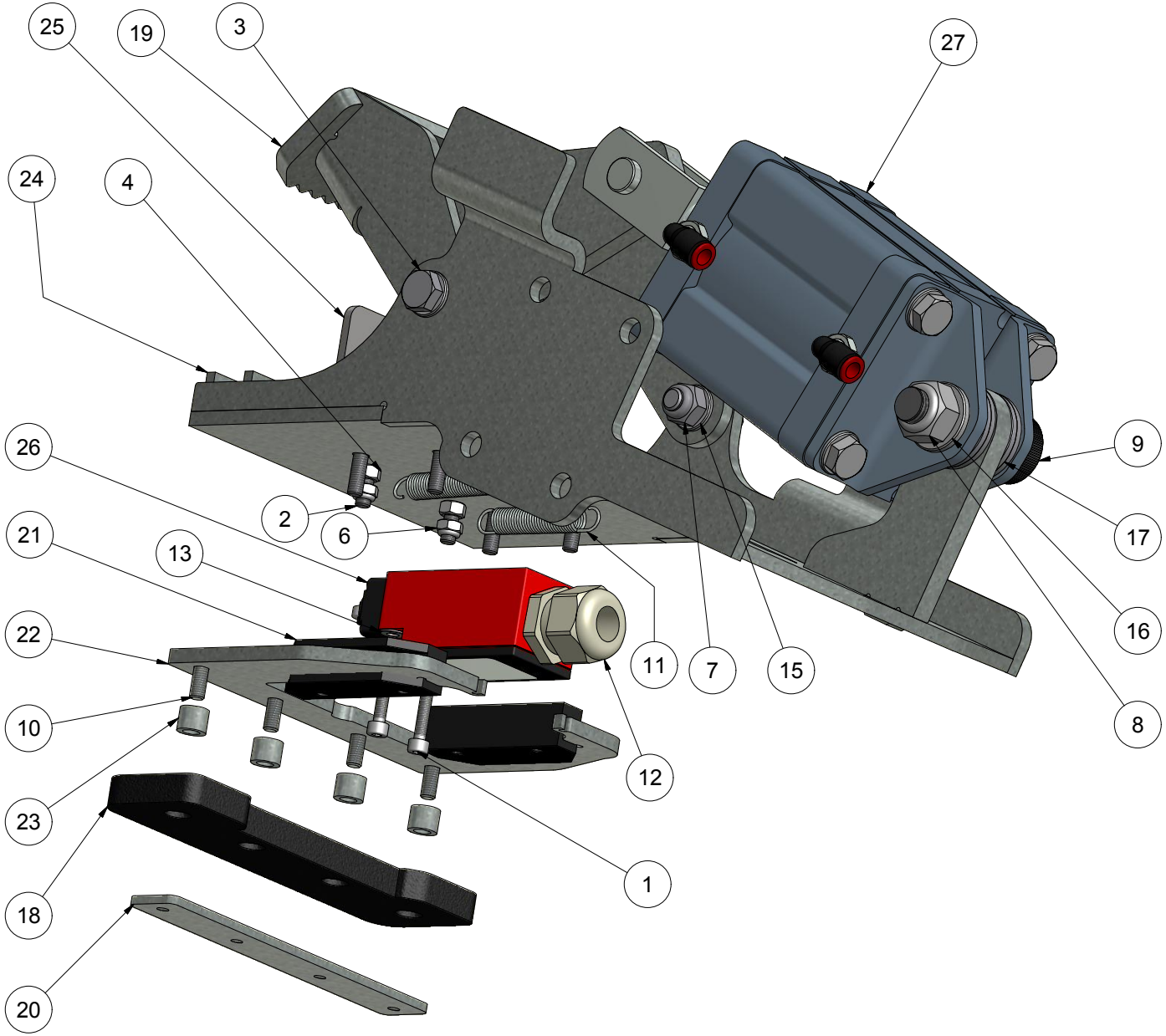

PARTS LIST

ITEM	QTY	PART NUMBER	DESCRIPTION
1	2	10204030	Hexagon cylinder head M4x30 FZB
2	6	11405020	Hexagon bolt M5x20 FZB
3	2	11408025	Hexagon bolt M8x25 FZB
4	2	1505000	Nut M5 FZB
5	2	17904000	Self-locking nut M4 FZB
6	2	17905000	Self-locking nut M5 FZB
7	2	17908000	Self-locking nut M8 FZB
8	1	17912000	Self-locking nut M12 FZB
9	1	20212030	Fitting bolt M12-16x30mm
10	4	20405016	Hexagon countersunk head M5x16 FZB
11	2	50621045	Extension spring 1-9x45
12	1	600455	Cabel gland M20 Ø5-12
13	2	82104000	Chamfered Washer M4 FZB
14	6	82105900	Chamfered Washer M5 FZB
15	4	82108000	Chamfered Washer M8 FZB
16	1	82112000	Chamfered Washer M12 FZB
17	4	82116000	Chamfered Washer M16 FZB
18	1	M100622	Rubber bumper
19	1	M100627	Clamp jaw
20	1	M100639	clamp plate for rubber
21	2	M100644	Rail for safty plate
22	1	M100660	Safety plate - Bodyclamp
23	4	M100788	Bush for bumper
24	1	M100827	Bottom jaw 15
25	1	M100892	Leg stop
26	1	M101617	Bernstien End stop, overload switch
27	1	M101619	Ø63 cylinder assembly

Break all edges

Revision:	Approved	Date:	Revision Description
1	HG	13-01-2016	Cylinder changed

The document is strictly confidential and may in no account be copied or disclosed to any third person.
HEDENSTED GRUPPEN A/S

HEDENSTED GRUPPEN

Scale: 1 : 1,5	Not specificed tolerance according to: DS/ISO 2768-m		Sheet size: A3
	Surface properties: No		Sheet: 1 /2
Part No.: M100864	Material:		
Description 1: Leg clamp assembly 15			
Description 2: HG quick skin 15			

PARTS LIST			
ITEM	QTY	PART NUMBER	DESCRIPTION
1	4	11408020	Hexagon bolt M8x20 FZB
2	1	210370	Cylinder RA/192063/M/50
3	1	214120	F-Joint QM-8040-25
4	2	215760	Elbow swirvel Ø6 x 1/8"
5	4	82108000	Chamfered Washer M8 FZB
6	2	M101618	Ø63 cyl bracket

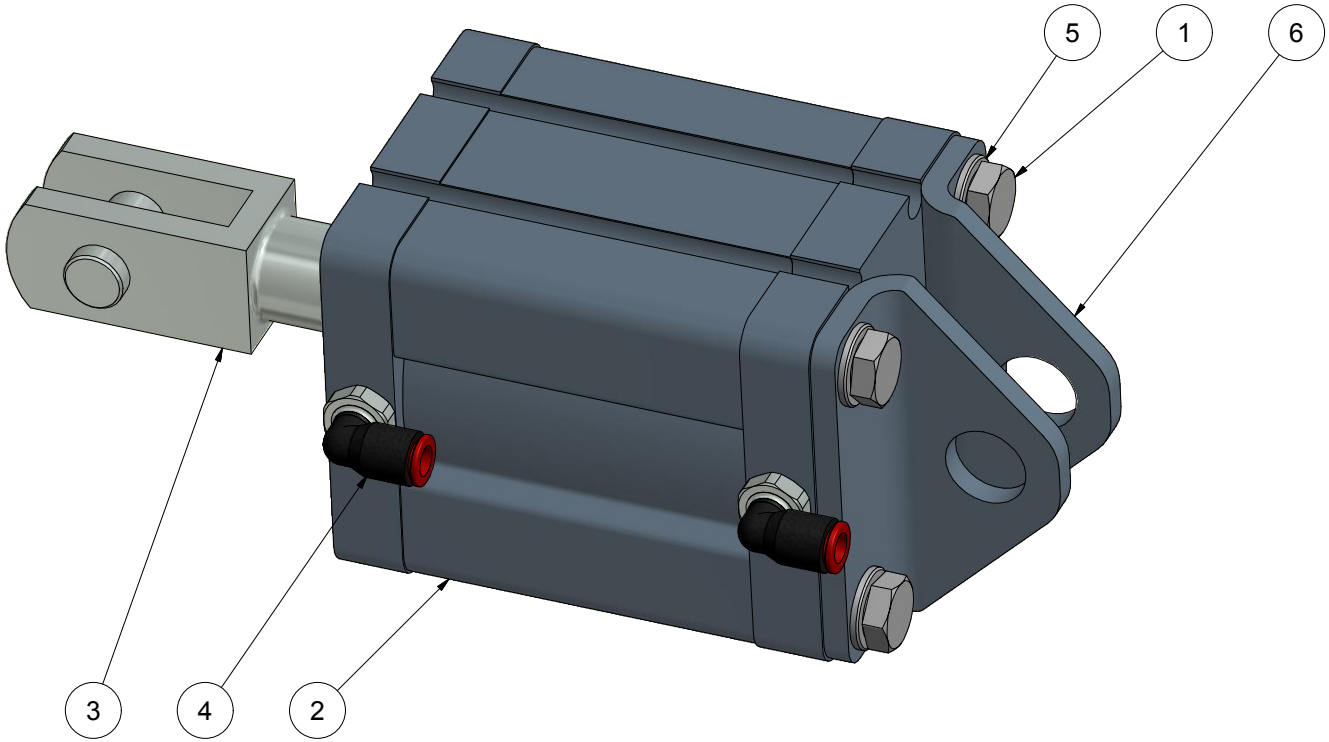

Breake all edges

Revision:	Approved	Date:	Revision Description
1	MRH	13-01-2016	Made

The document is strictly confidential and may in no account be copied or discloses to any third person.

HEDENSTED GRUPPEN A/S

HEDENSTED GRUPPEN

Scale: 1 : 1	Not specificed tolerance according to: DS/ISO 2768-m	Sheet size: A3
	Surface properties: No	Sheet: 1 /1
Part No.: M101619	Material:	
Description 1: Ø63 cylinder assembly		
Description 2:		

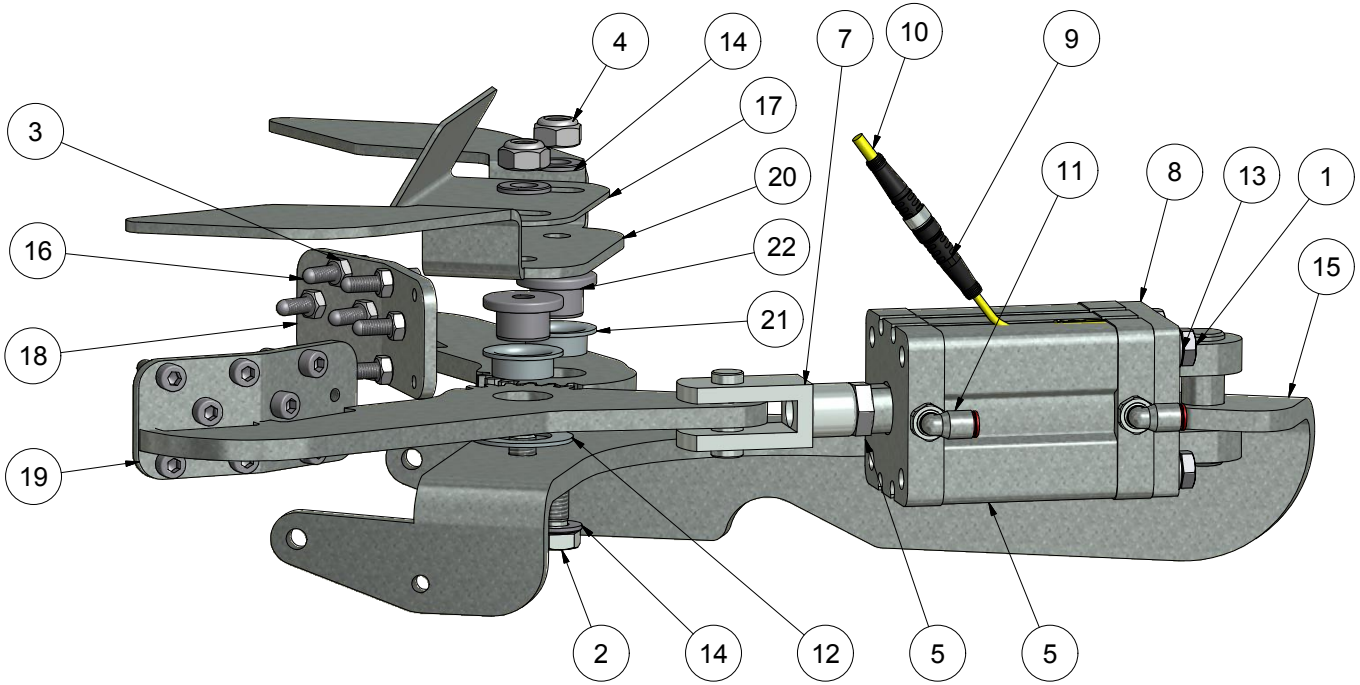

PARTS LIST			
ITEM	QTY	PART NUMBER	DESCRIPTION
1	5	11408025	Hexagon bolt M8x25 FZB
2	2	11410045	Hexagon bolt M10x45 FZB
3	15	1506000	Nut M6 FZB
4	2	17910000	Self-locking nut M10 FZB
5	1	210345	Cylinder RA_192050_M_50
6	1	210428	Lock nut MP150190_M12x1,25
7	1	214120	F-Joint QM-8040-25
8	1	214163	L-Joint QA/8050/42
9	1	214312	Reed induktiv sensor (yellow)
10	1	214314	Socket with 3M wire 3p/M8
11	2	215760	Swirvel elbow Ø6mm 1/8"
12	2	222597	Slideflange ø22/38 x 1,5mm
13	6	82108000	Washer M8 FZB
14	4	82110000	Washer M10 FZB
15	1	M100614	Base for clamp
16	15	M100621	Dull spike
17	1	M100629	Body shield
18	1	M100634	Left clamp arm
19	1	M100635	Rigth clamp arm
20	1	M100640	Clamp shield
21	2	M100856	Slide bearing ø20x23 - 8mm
22	2	M200340	Shaft for arm

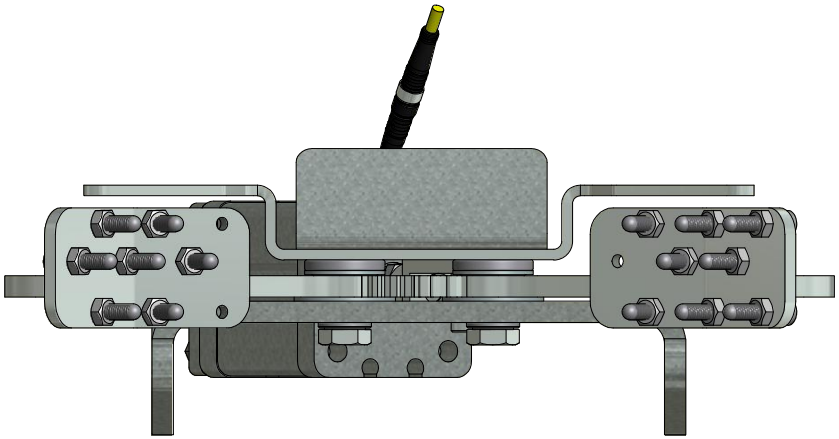

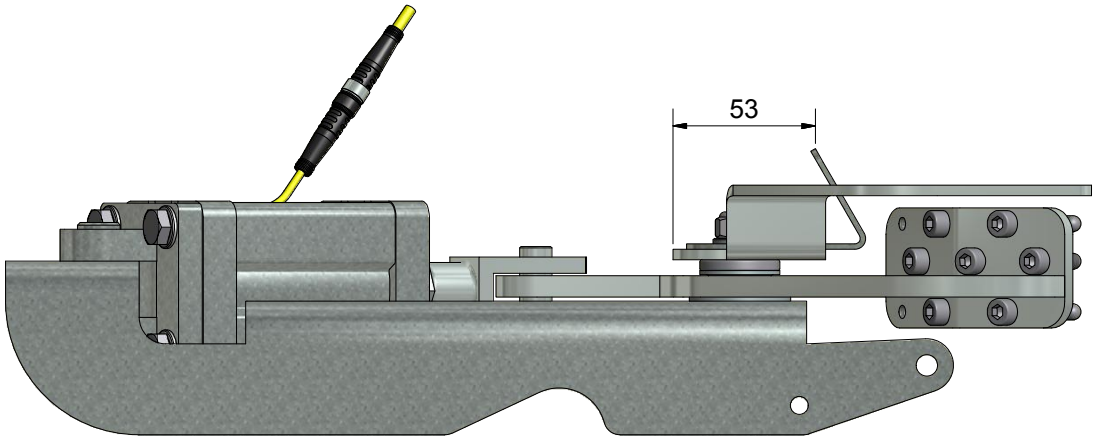

Alle kanter reifes
Breake all edges

A	Made	26-06-2014	MRH
REV	DESCRIPTION	DATE	APPROVED
REVISION HISTORY			

The document is strictly confidential and may in no account be copied or discloses to any third person. HEDENSTED GRUPPEN A/S

Hedensted Gruppen

Scale: 1 : 2	Ikke angivet tolerancer iht./ Not specificed tolerance according to: DS/ISO 2768-m	Sheet size: A3
	Overfl. beskaffenhed/Surface properties: No	Sheet: 1 /1
Part No.: M100713	Material:	
Description: Body clamp		
Description: HG Quick skin 14		

A-A (1 : 5)

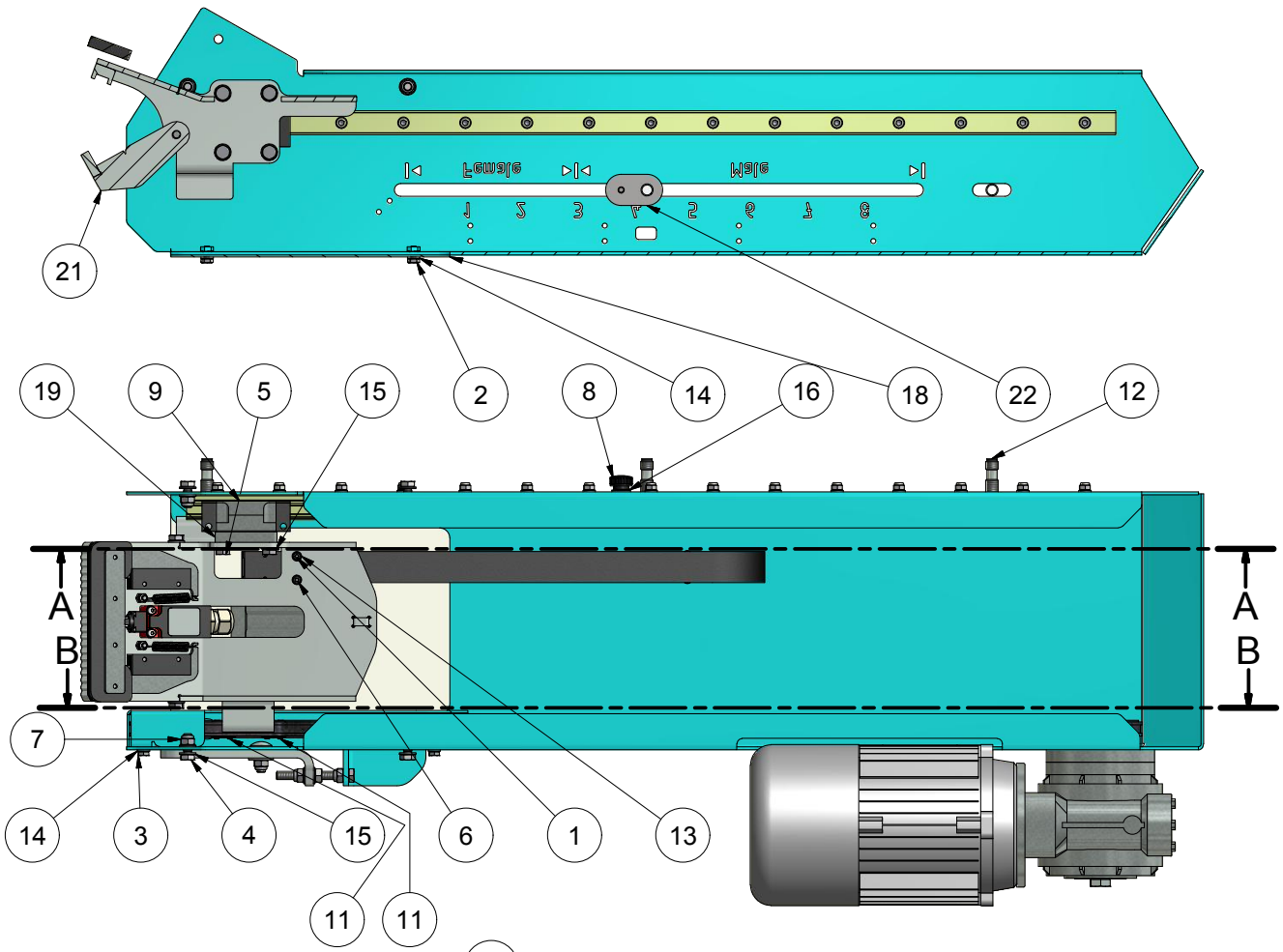

B-B (1 : 5)

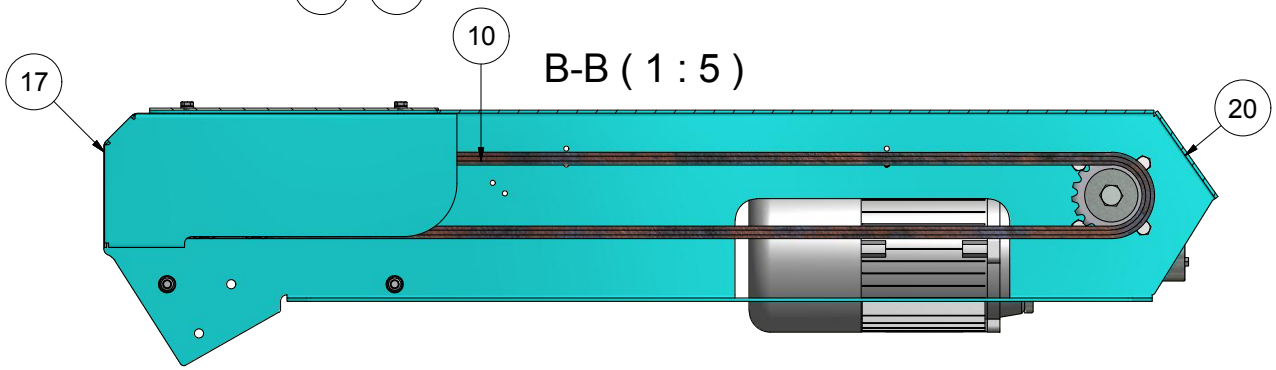

PARTS LIST			
ITEM	QTY	PART NUMBER	DESCRIPTION
1	2	11104040	Hexagon bolt M4x40 FZB
2	4	11406012	Hexagon bolt M6x12 FZB
3	3	11406016	Hexagon bolt M6x16 FZB
4	4	11408020	Hexagon bolt M8x20 FZB
5	4	11408025	Hexagon bolt M8x25 FZB
6	2	17904000	Self-locking nut M4 FZB
7	4	17908000	Self-locking nut M8 FZB
8	1	206681	Finger screw B193-20 P M6x10
9	1	222300	Ball runner block size 25
10	1,95 m	421361	Roller chain 1-2 x 5-16_206330
11	2	421363	Chain assembly 1/2" 5/16
12	3	601330	Induktion sensor M12 w. socket
13	3	82104000	Washer M4 FZB
14	8	82106000	Washer M6 FZB
15	12	82108000	Washer M8 FZB
16	1	82606000	Washer Ø6,4x18x1,6
17	1	M100645	Chain cover assembly
18	1	M100687	Screen for body pull
19	1	M100690	Spacer for bodyclamp
20	1	M100863	bodypull subassembly 15
21	1	M100864	Leg clamp assembly 15
22	1	M100868	Sensor plate f. 15

Alle kanter reifes
Breake all edges

REV	DESCRIPTION	DATE	APPROVED
A	Made	05-01-2015	MRH

REVISION HISTORY

The document is strictly confidential and may in no account be copied or disclosed to any third person HEDENSTED GRUPPEN A/S

Hedensted Gruppen

Scale: 1 : 5	Ikke angivet tolerancer iht./ Not specificed tolerance according to: DS/ISO 2768-m		Sheet size: A3
	Overfl. beskaffenhed/Surface properties: No		Sheet: 1 /2
Part No.: M100862	Material:		
Description: bodypull assembly 15			
Description:			

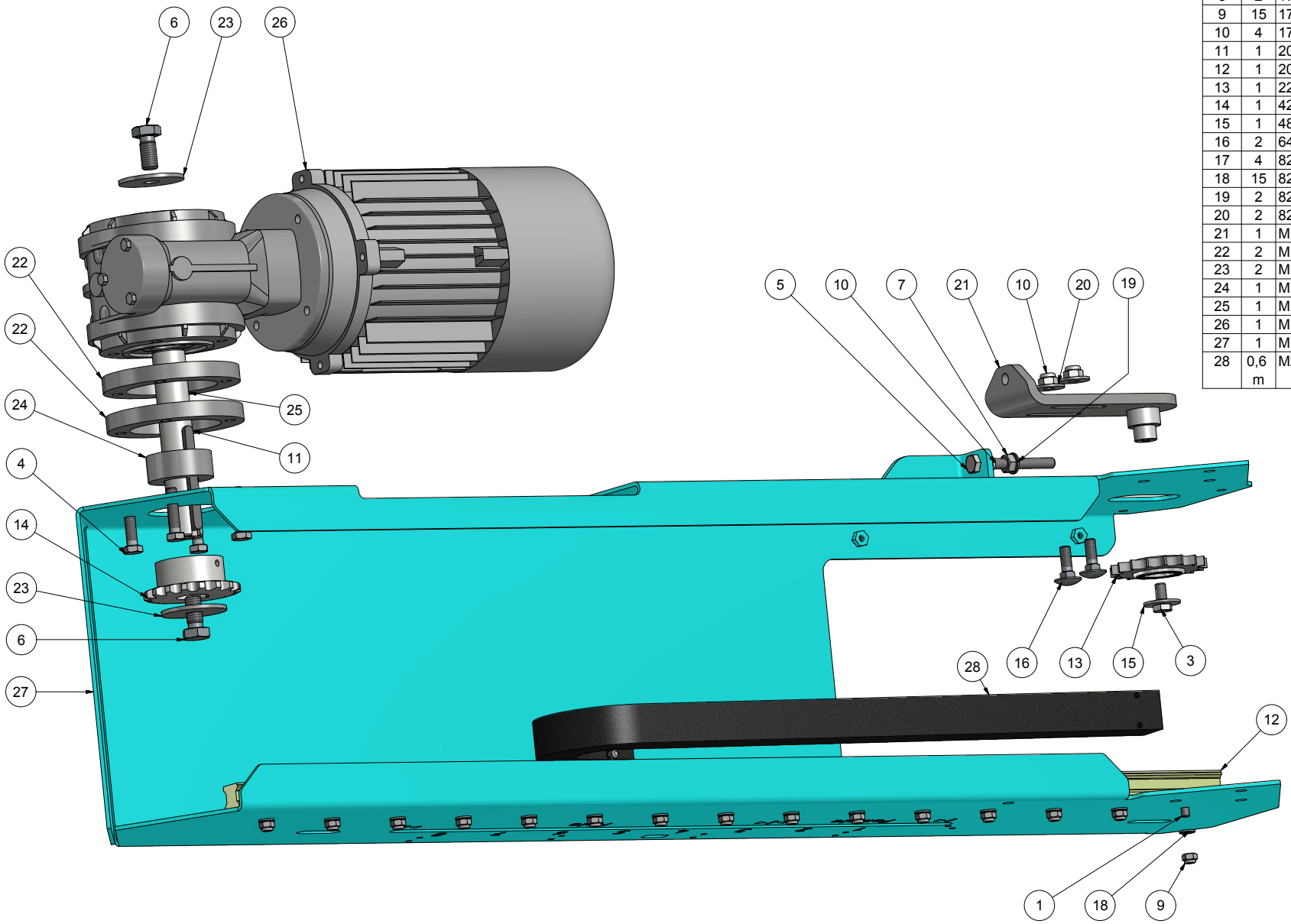

PARTS LIST

ITEM	QTY	PART NUMBER	DESCRIPTION
1	15	10206025	Bolt unbraco cyl 6x25 FZB
2	2	11104040	Hexagon bolt M4x40 FZB
3	1	11408016	Hexagon bolt M8x16 FZB
4	4	11408035	Hexagon bolt M8x35 FZB
5	1	11408070	Hexagon bolt M8x70 FZB
6	2	11412025	Hexagon bolt M12x25 FZB
7	1	1508000	Nut M8 FZB
8	2	17904000	Self-locking nut M4 FZB
9	15	17906000	Self-locking nut M6 FZB
10	4	17908000	Self-locking nut M8 FZB
11	1	204796	Key 8x7x80mm DIN-6885A
12	1	207987	Ball guide rail size 25-900
13	1	221690	Chain wheel 08 B1 Z17 ø17mm
14	1	421325	Chain wheel 1/2" Z17 Ø25
15	1	4809028	Washer SKRB Ø9x28x2
16	2	64408025	Cup head square neck bolt M8x25 FZB
17	4	82104000	Washer M4 FZB
18	15	82106000	Washer M6 FZB
19	2	82108000	Washer M8 FZB
20	2	82608000	Washer ø8x24x2 DIN9021A
21	1	M100615	Chain tensionser TOP
22	2	M100617	Motor flange
23	2	M100624	Motor washer
24	1	M100667	Spacer for top motor
25	1	M100674	Top motor shaft
26	1	M100745	Gearbreakmotor RMI50P-0,75kw 1400rpm
27	1	M100829	Shield assembly 15
28	0,6 m	M200327	Energi chain kolibri 30x30mm

REV	DESCRIPTION	DATE	APPROVED
A	Made	05-01-2015	MRH

REVISION HISTORY

Alle kanter reifes
Breake all edges

This document is the property of Hedensted Gruppen. Reproduction or distribution without written permission is prohibited.
HEDENSTED GRUPPEN A/S

Hedensted Gruppen

Scale: 1 : 2,2	Ikke angivet tolerancer iht./ Not specified tolerance according to: DS/ISO 2768-m	Sheet size: A2
	Overfl. beskaffenhed/Surface properties: No	Sheet: 1 /2
Part No.: M100863	Material:	
Description: bodypull subassembly 15		
Description:		

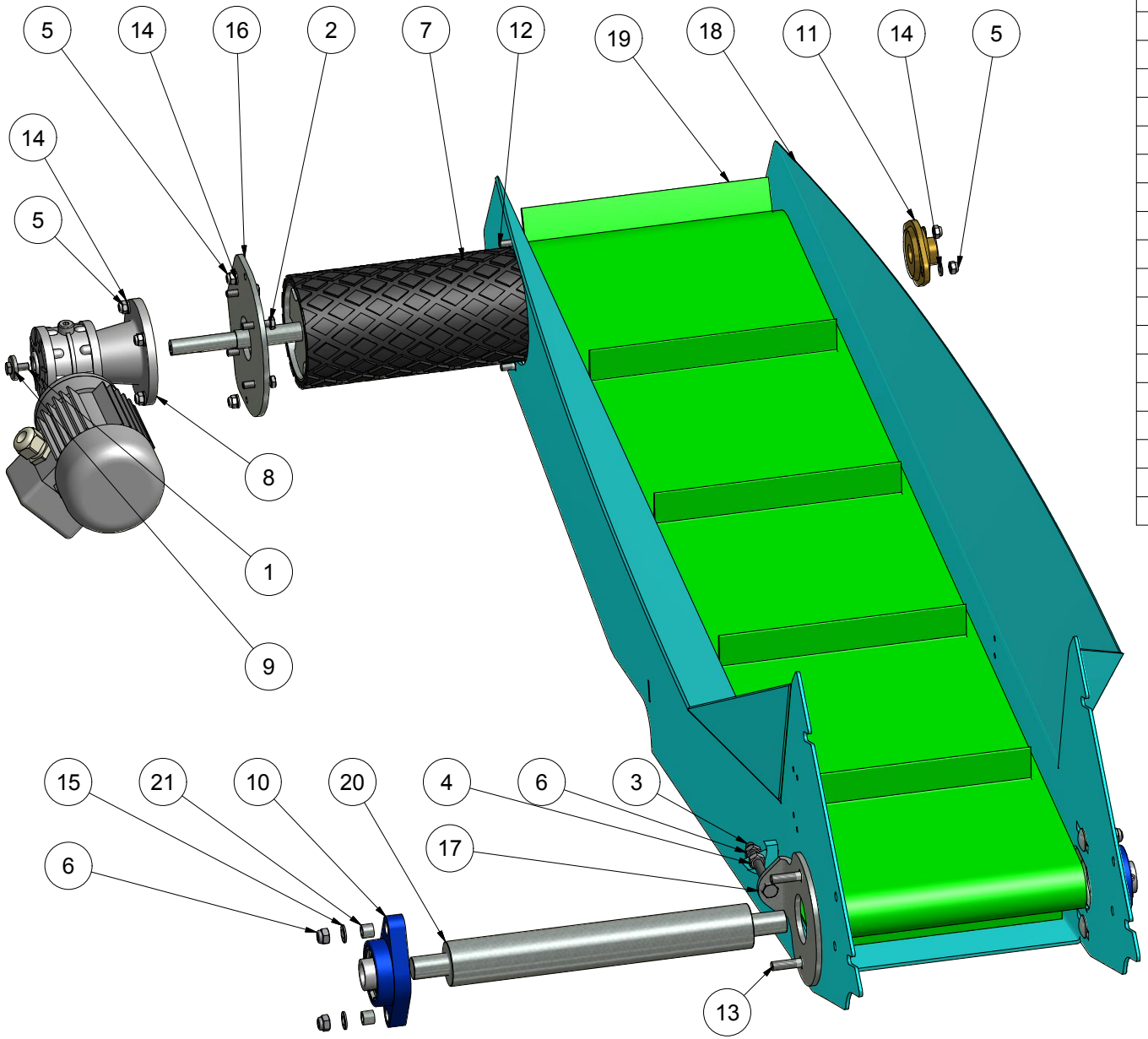

PARTS LIST

ITEM	QTY	PART NUMBER	DESCRIPTION
1	1	11406016	Hexagon bolt M6x16 FZB
2	4	11406025	Hexagon bolt M6x25 FZB
3	2	11408075	Hexagon bolt m8x75 FZB
4	2	1508000	Nut M8 FZB
5	8	17906000	Self-locking nut M6 FZB
6	8	17908000	Self-locking nut M8 FZB
7	1	222804	Pulley ø100x250
8	1	222820	Gearmotor RMI28 F2 1/28 0,08kW
9	1	4206000	Washer Type TBRSB ø6x22x4
10	2	473106	Y-bearing FS Ø20
11	1	473160	Y-Bearing RATY-17
12	4	64406016	Cup head square neck bolt M6x16 FZB
13	4	64408035	Cup head square neck bolt M8x35 FZB
14	8	82106000	Washer M6 FZB
15	4	82108000	Washer M8 FZB
16	1	M100618	Motor mount
17	2	M100628	Bearing mount
18	1	M100633	Conveyor box weldment
19	1	M100641	Conveyor belt
20	1	M100663	shaft for belt
21	4	M100689	Bush for ø20 bearing

Alle kanter reifes
Breake all edges

REV	DESCRIPTION	DATE	APPROVED
A	Made	27-06-2014	MRH

REVISION HISTORY

The document is strictly confidential and may not in no account be copied or discloses to any third person.

HEDENSTED GRUPPEN A/S

Hedensted Gruppen

Scale: 1 : 4	Ikke angivet tolerancer iht./ Not specificed tolerance according to: DS/ISO 2768-m	Sheet size: A3
	Overfl. beskaffenhed/Surface properties: No	Sheet: 1 /2
Part No.: M100715	Material:	
Description: Conveyor assembly		
Description:		

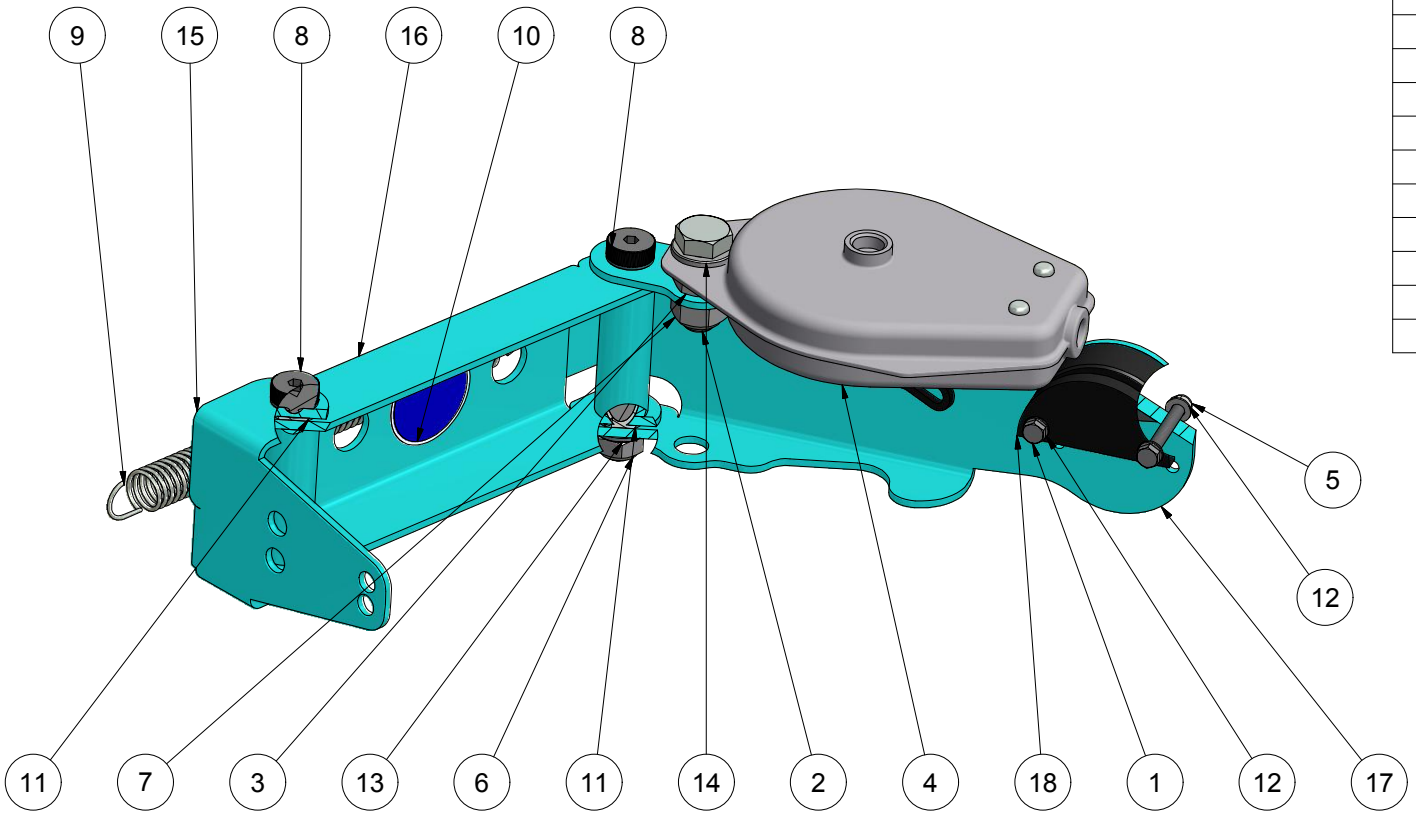

PARTS LIST			
ITEM	QTY	PART NUMBER	DESCRIPTION
1	2	11405040	Hexagon bolt m5x40 FZB
2	1	11412035	Hexagon bolt M12x35 FZB
3	1	1512000	Nut M12 FZB
4	1	175800	Siraflex spring balance, 1-2kg
5	2	17905000	Self-locking nut M5 FZB
6	2	17910000	Self-locking nut M10 FZB
7	1	17912000	Self-locking nut M12 FZB
8	2	20210070	Fitting bolt M10-12x70mm
9	1	207944	Extension spring 1,6-13,5x120
10	1	31010	Warning sign, Ear protec.
11	4	423423	Slide Bearing PAF 12070 P10
12	4	82105900	Washer M5 FZB
13	2	82110000	Washer M10 FZB
14	2	82112000	Washer M12 FZB
15	1	M100632	Bracket for cutter
16	1	M100646	Cutter arm
17	1	M100647	Cutter arm - Front
18	1	M100675	Wire guide

Alle kanter reifes
Breake all edges

REV	DESCRIPTION	DATE	APPROVED
A	Made	04-08-2014	MRH

REVISION HISTORY

The document is strictly confidential and may in no account be copied or discloses to any third person.
HEDENSTED GRUPPEN A/S

Hedensted Gruppen

Scale:	Ikke angivet tolerancer iht./ Not specificed tolerance according to: DS/ISO 2768-m	Sheet size: A3
	Overfl. beskaffenhed/Surface properties: No	Sheet: 1 /1
Part No.: M100719	Material:	
Description: headcutter assembly		
Description:		

PARTS LIST			
ITEM	QTY	PART NUMBER	DESCRIPTION
1	1	50171	Plug CE 16A 5p, Phase inverter
2	11	600112	Terminal block DLD 2.5/35
3	1	600125	End plate AP-DLD nr 131766
4	2	600130	Cross connector Q10 no131310
5	0,83 m	600155	DIN rail
6	2	600156	Bracket 45deg for Din rail
7	2	600282	ContactorLP1K0901B 9A 3NO-1NC
8	1	600313	PLC FX3G-40MR-ES
9	1	600358	Safety switch 20A Kpl Black
10	1	600359	Zero-concact for 20A switch
11	1	600369	PE terminal VZ14
12	1	600380	Freq. converter FR-D720S-042EC
13	1	600385	EMC-Filter FFR-CS-050-14A1RF1
14	2	600429	Gasket Multihole M32 7x Ø7
15	3	600455	Cabel gland M20 Ø5-12
16	6	600465	Cable gland M25
17	2	600466	Cabel gland M32 15-24,5
18	3	600475	Nut M20 polyamid
19	6	600480	Nut M25 polyamid
20	2	600481	Nut polyamid M32
21	1,27 m	600485	Cable duct 75x37
22	15	600550	Terminal block WDU_2,5
23	2	600555	End plate WAP 2,5-10
24	15	600560	Terminal block WDK 2,5
25	2	600565	End plate WAP DK 2,5
26	1	600585	Earthing terminal WPE 2,5
27	5	600590	End bracket EW 35
28	5,0 m	600640	Cable JZ 5G2,5mm2
29	1	600910	Freq. converter FR-D720S-070-EC
30	2	600930	Socket for RXM2, RXZE2S108M
31	2	600935	Relay 12A 2C0_RMX2
32	2	601035	Auto. fuse 16A C 1P+N
33	1	601095	Automatic fuse. 10A C 1P+N
34	2	601110	Add on block LA1KN11 1N+1NC
35	1	601255	FX2N-8ER-ES/ul
36	1	601275	Power supply SPD24061
37	1	601287	Low leak RFI filter- FRE 720
38	1	601342	Safety controller SC26-2d
39	1	875096	Motor protection GV2ME03 0,25-0,40A
40	1	M100736	Electrical box
41	1	M10840	Eletrical mounting 206330

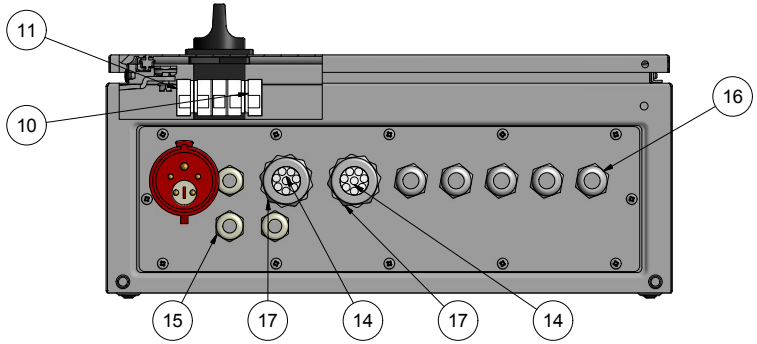

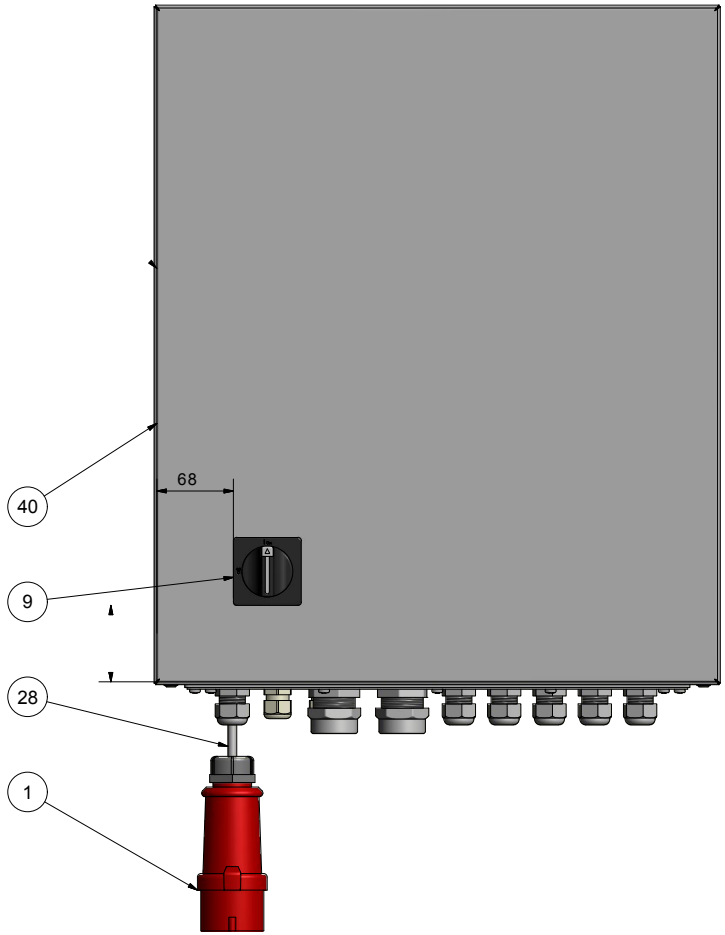

REV	DESCRIPTION	DATE	APPROVED
A	Made	06-08-2014	MRH
B	Parts changed	08-01-2015	MRH

REVISION HISTORY

Alle kanter reifes
Breake all edges

Hedensted Gruppen	Scale: 0,3 : 1	Ikke angivet tolerancer ihf./ Not specified tolerance according to: DS/ISO 2768-m	Sheet size: A2
		Overfl. beskaffenhed/Surface properties: No	Sheet: 1 /4
Part No.: M100728	Material:		
Description: Electrical box assembly			
Description: HG quick skin 14			

This document is strictly confidential and remains the property of HEDENSTED GRUPPEN A/S

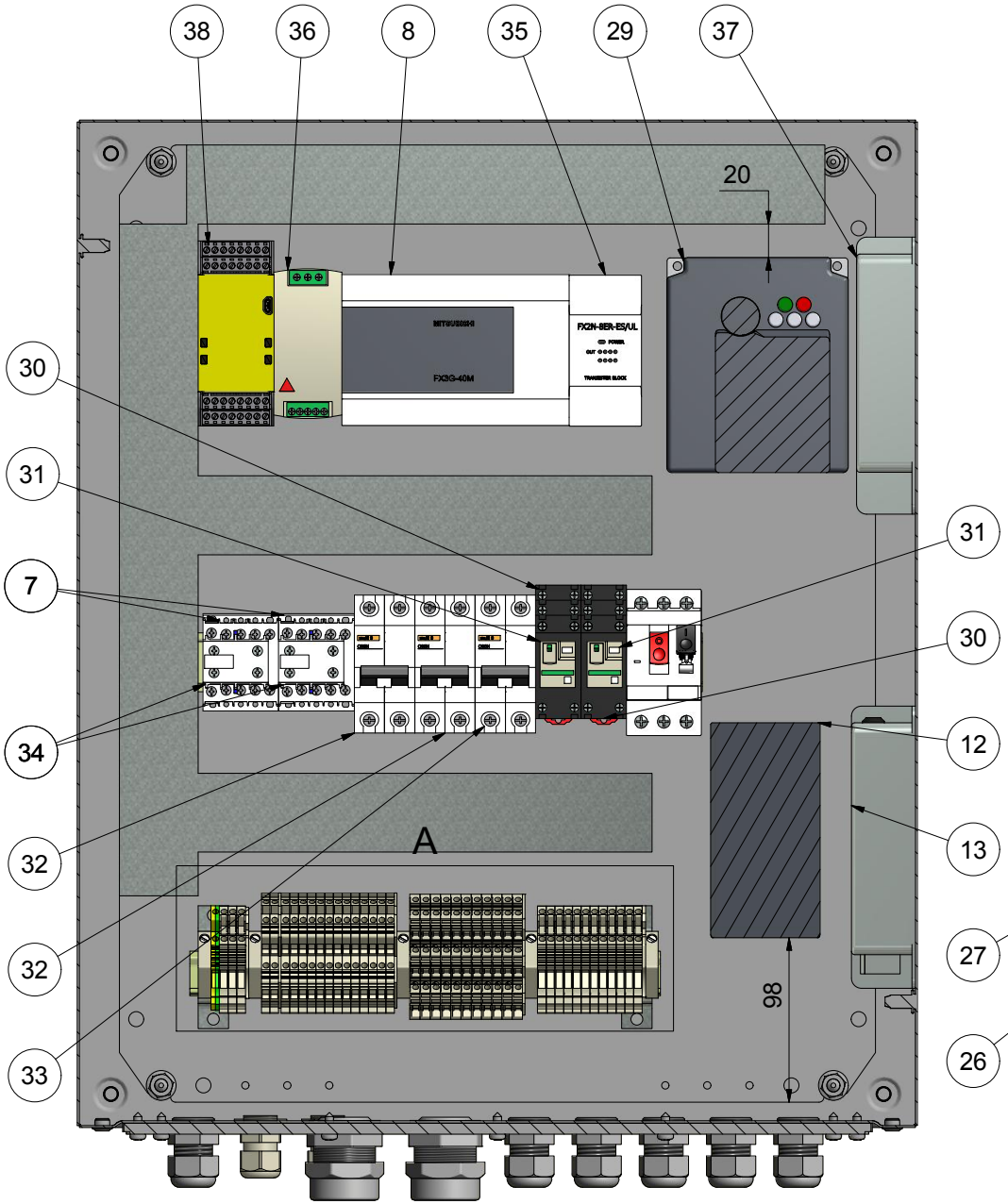

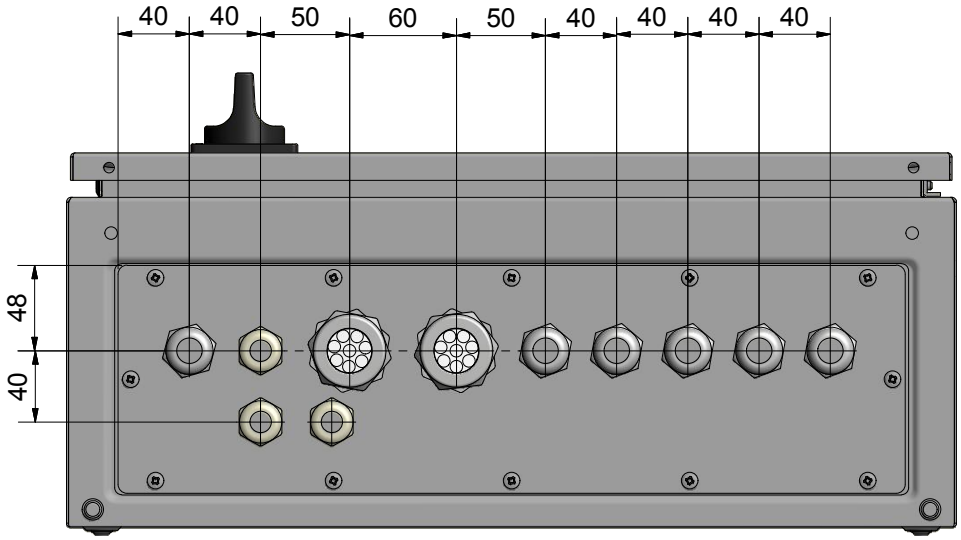

A (1 : 1,5)

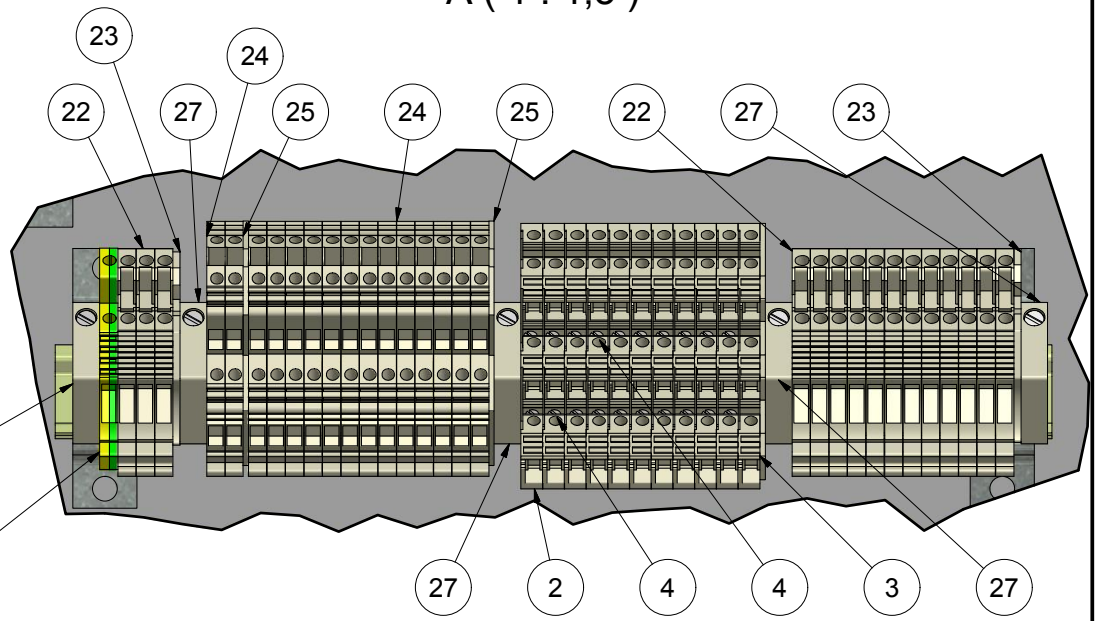

Alle kanter reifes
Breake all edges

HG Hedensted Gruppen	Scale: 0,3 : 1	Ikke angivet tolerancer iht./ Not specificed tolerance according to: DS/ISO 2768-m	Sheet size: A3
		Overfl. beskaffenhed/Surface properties: No	Sheet: 2 /4
Part No.: M100728	Material:		
Description: Electrical box assembly			
Description: HG quick skin 14			

The document is strictly confidential and may not on no account be copied or disclosed to any third person.
HEDENSTED GRUPPEN A/S

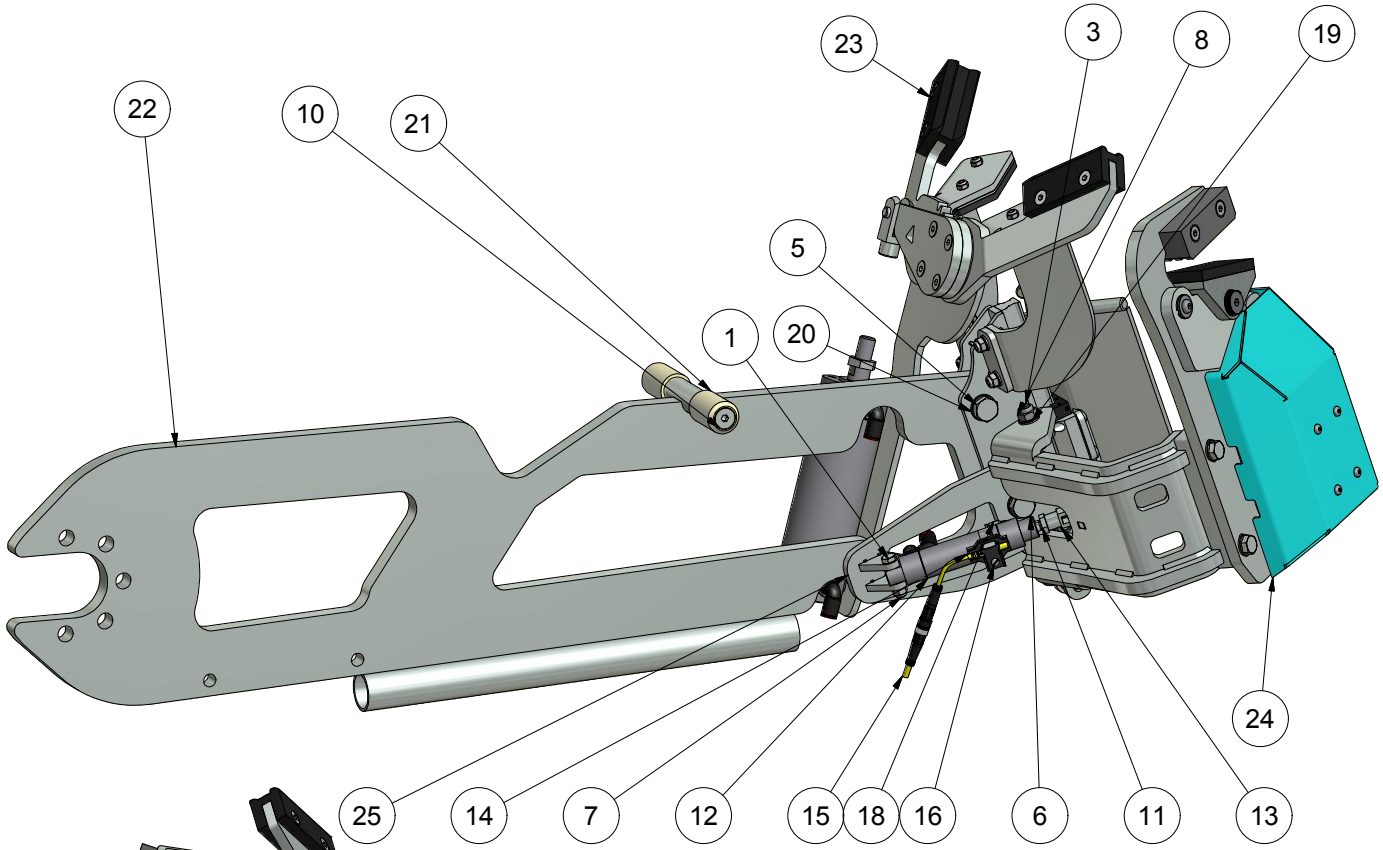

PARTS LIST			
ITEM	QTY	PART NUMBER	DESCRIPTION
1	1	11406030	Hexagon bolt M6x30 FZB
2	1	11408020	Hexagon bolt M8x20 FZB
3	2	11408030	Hexagon bolt M8x30 FZB
4	2	11408045	Hexagon bolt M8x45 FZB
5	1	11410040	Hexagon bolt M10x40 FZB
6	1	11410050	Hexagon bolt M10x50 FZB
7	1	17906000	Self-locking nut M6 FZB
8	4	17908000	Self-locking nut M8 FZB
9	2	17910000	Self-locking nut M10 FZB
10	2	20408055	Hexagon countersunk 8x55 FZB
11	1	210421	Lock nut M/P1501/60
12	1	211622	Cylinder RT/57220/M/40
13	1	214105	F-Joint QM-57020-25
14	1	214312	Reed induktiv sensor (yellow)
15	1	214314	Socket with 3M wire 3p/M8
16	1	214316	Clamp for sensor
17	1	215114	Banjo flowcontrol ø6x1/8" 90gr
18	1	215754	Swivel elbow Mini - Ø6-1_8
19	7	82108000	Washer M8 FZB
20	4	82110000	Washer M10 FZB
21	2	M100669	support wheel
22	1	M100682	Skin pull arm
23	1	M100731	Leg skin clamp
24	1	M100732	Tail clamp assembly
25	1	M100875	Cylinder turn bracket

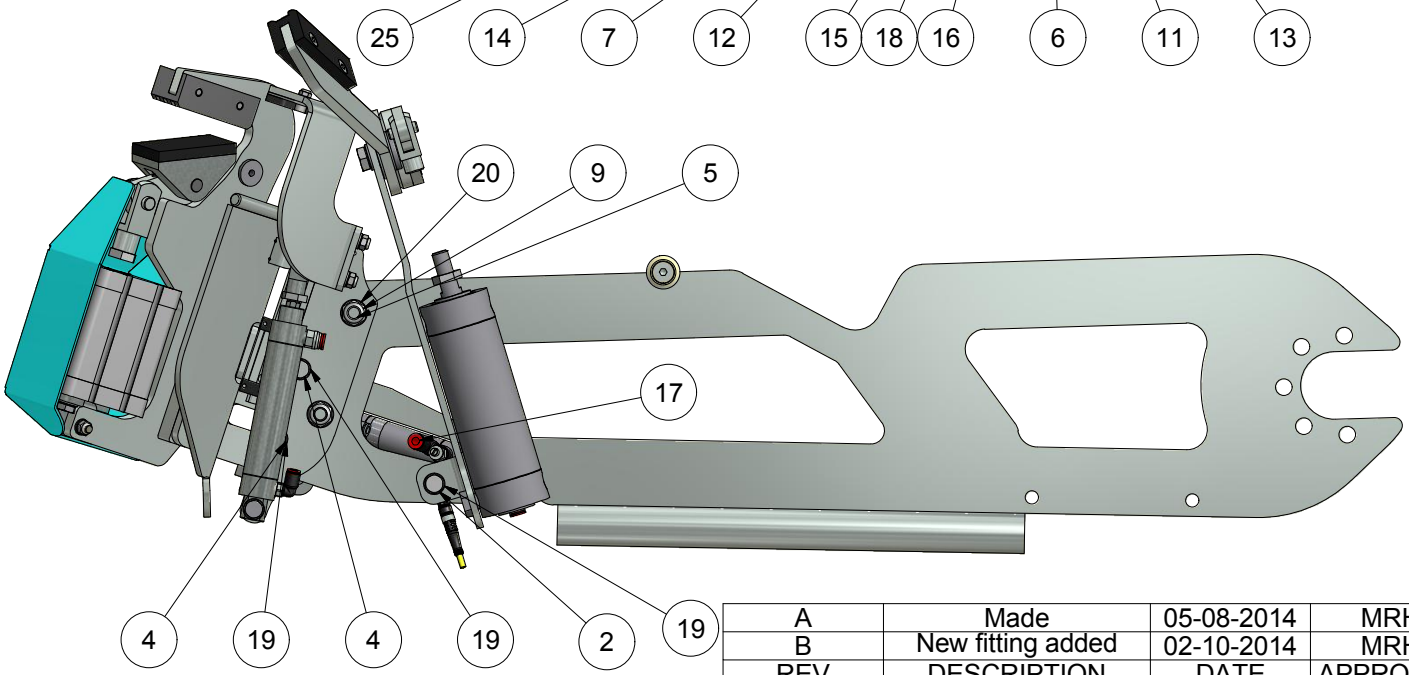

REVISION HISTORY			
REV	DESCRIPTION	DATE	APPROVED
A	Made	05-08-2014	MRH
B	New fitting added	02-10-2014	MRH

Alle kanter reifes
Breake all edges

The document is strictly confidential and may in no account be copied or disclosed to any third person.
HEDENSTED GRUPPEN A/S

Hedensted Gruppen

Scale: 1 : 4	Ikke angivet tolerancer iht./ Not specificed tolerance according to: DS/ISO 2768-m		Sheet size: A3
	Overfl. beskaffenhed/Surface properties: No		Sheet: 1 /1
Part No.: M100730	Material:		
Description: Skin arm assembly			
Description:			

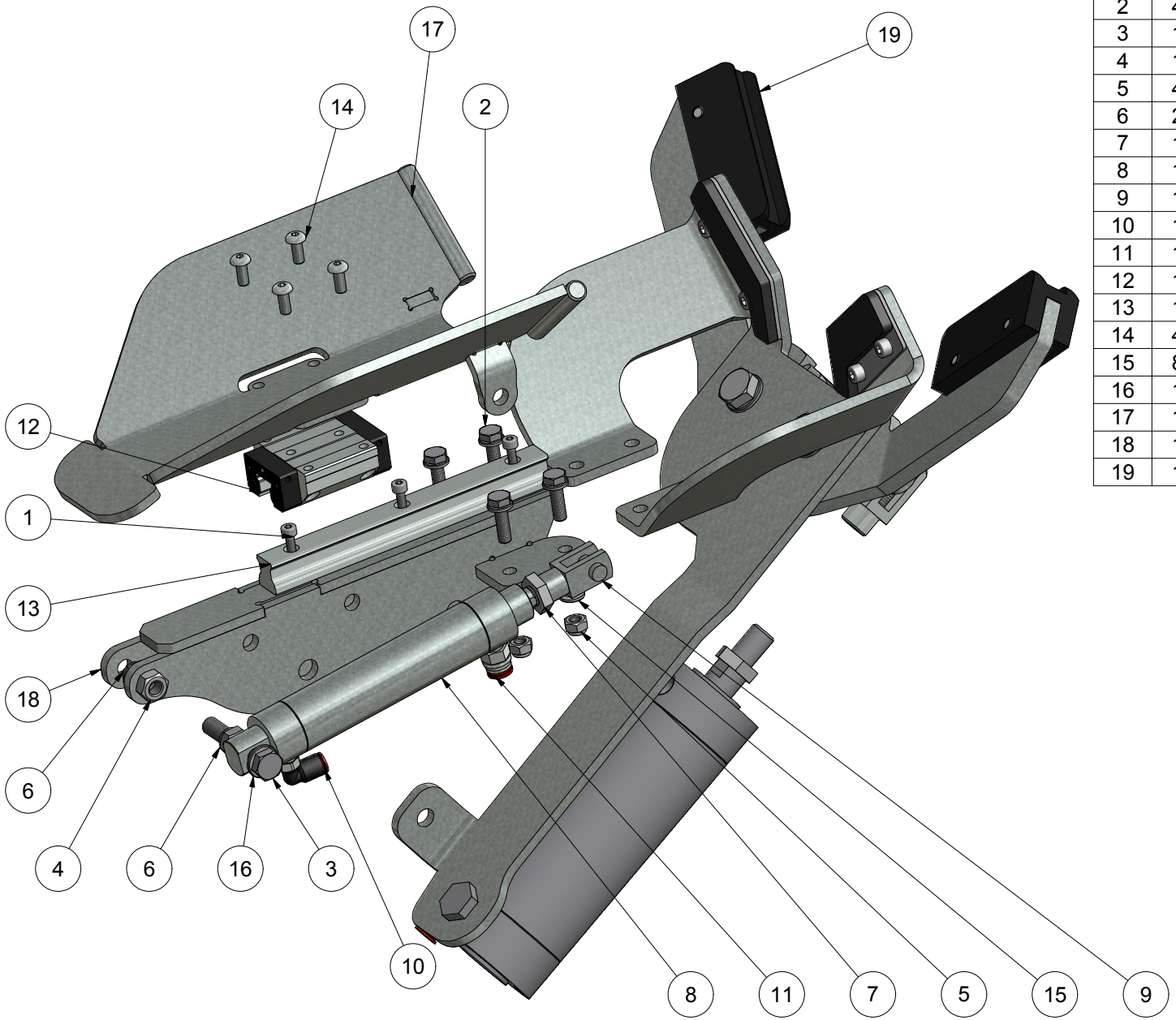

PARTS LIST			
ITEM	QTY	PART NUMBER	DESCRIPTION
1	3	10204016	Bolt.unbraco cyl 4x16 FZB
2	4	11406020	Hexagon bolt M6x20 FZB
3	1	11408050	Hexagon bolt M8x50 FZB
4	1	1508000	Nut M8 FZB
5	4	17906000	Self-locking nut M6 FZB
6	2	17908000	Self-locking nut M8 FZB
7	1	210427	Lock nut MP150189_M10x1,25
8	1	211018	Cylinder RT-57225-M-80
9	1	214100	F-joint QM-57025-25
10	1	215730	Swirvel elbow Ø6mm 1-8
11	1	215900	Straight connector Ø6 1/8"
12	1	222315	Ball runner block size 15
13	1	222331	Ball guide rail size 15-150mm
14	4	76005012	Bolt buttonhead 5x12 FZB
15	8	82106000	Washer M6 FZB
16	1	82108000	Washer M8 FZB
17	1	M100666	Skin lock spade
18	1	M100678	Skin clamp base
19	1	M100720	Safety bumper assembly

Alle kanter reifes
Breake all edges

REV	DESCRIPTION	DATE	APPROVED
A	Made	26-06-2014	MRH
B	Assembly updated	06-01-2015	MRH

REVISION HISTORY

The document is strictly confidential and may not be in no account be copied or disclosed to any third person.
HEDENSTED GRUPPEN A/S

Hedensted Gruppen

Scale: 1 : 2	Ikke angivet tolerancer iht./ Not specificed tolerance according to: DS/ISO 2768-m		Sheet size: A3
	Overfl. beskaffenhed/Surface properties: No		Sheet: 1 /2
Part No.: M100731	Material:		
Description: Leg skin clamp			
Description:			

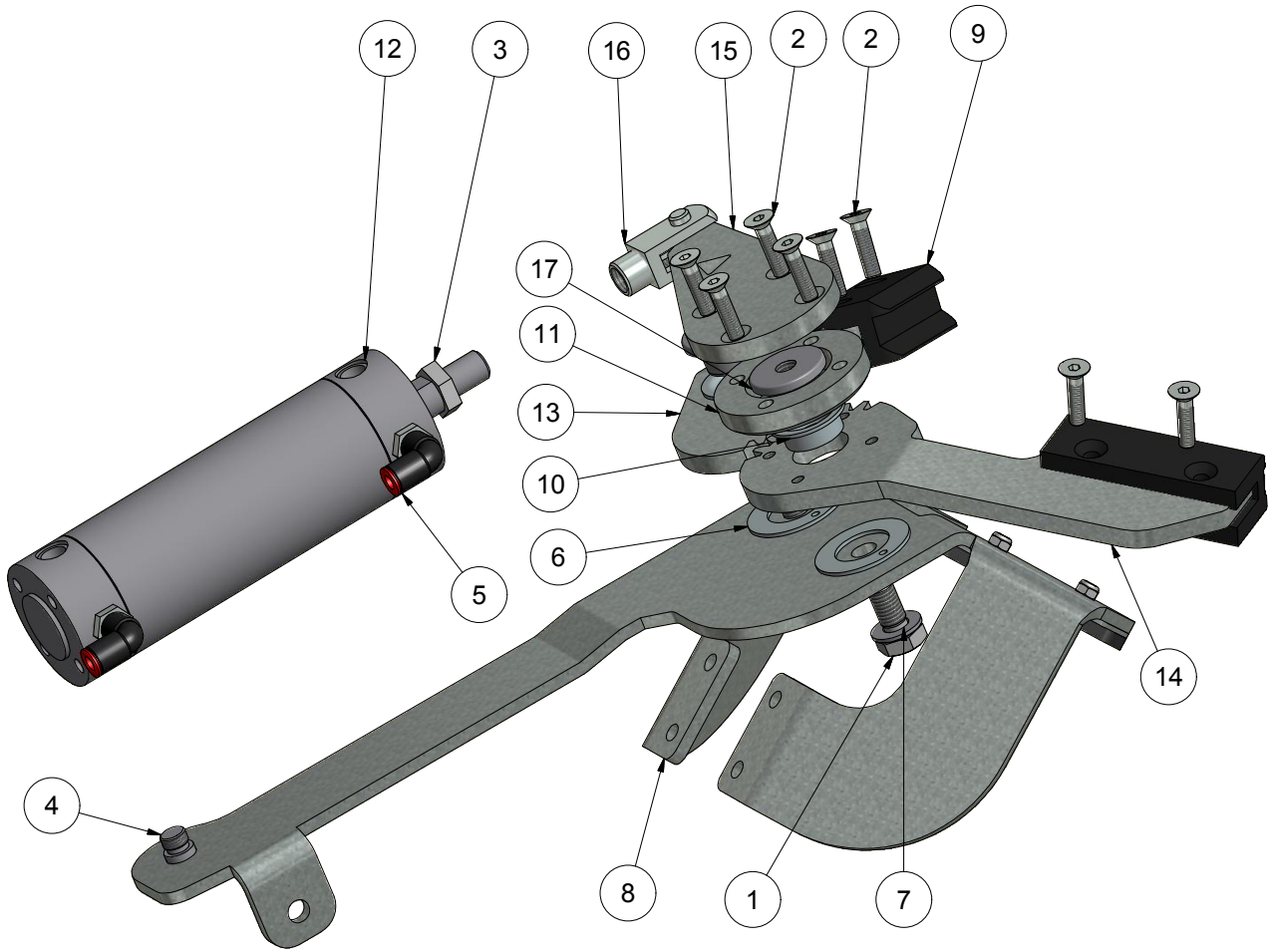

PARTS LIST			
ITEM	QTY	PART NUMBER	DESCRIPTION
1	2	11410020	Hexagon bolt M10x20 FZB
2	8	20406025	Hexagon countersunk 6x25 FZB
3	1	210428	Lock nut MP150190_M12x1,25
4	1	210460	Bolt M/P29134
5	2	215732	Swirvel elbow ø6mm 1/4"
6	2	222597	Slideflange ø22/38 x 1,5mm
7	2	82110000	Washer M10 FZB
8	1	M100717	Front skin clamp
9	2	M100848	Skin support jaw
10	2	M100856	Slide bearing ø20x23 - 8mm
11	1	M100857	Spacer for 2. skin clamp
12	1	M100869	Cylinder RT-57250-M-80
13	1	M100870	Right skin arm
14	1	M100871	Left skin arm
15	1	M100872	Torque arm
16	1	M100878	Drilled up fork - M12x1,25
17	2	M200340	Shaft for arm

REV	DESCRIPTION	DATE	APPROVED
A	Made	26-06-2014	MRH
B	Plate ande bush added	01-09-2014	MRH
C	Assembly changed	06-01-2015	MRH
D	Bolt and washer changed	07-04-2015	MRH

REVISION HISTORY

Alle kanter reifes
Breake all edges

The document is strictly confidential and may not on no account be copied or disclosed to any third person.
HEDENSTED GRUPPEN A/S

Hedensted Gruppen

Scale: 1 : 2	Ikke angivet tolerancer iht./ Not specificed tolerance according to: DS/ISO 2768-m		Sheet size: A3
	Overfl. beskaffenhed/Surface properties: No		Sheet: 1 /2
Part No.: M100720	Material:		
Description: Safety bumper assembly			
Description:			

PARTS LIST			
ITEM	QTY	PART NUMBER	DESCRIPTION
1	4	10205012	Bolt unbrako cyl 5x12 FZB
2	4	17905000	Self-locking nut M5 FZB
3	1	M100668	Stop plate
4	1	M100929	Rubber plate left - Leg skin
5	1	M100930	Rubber plate right - Leg skin

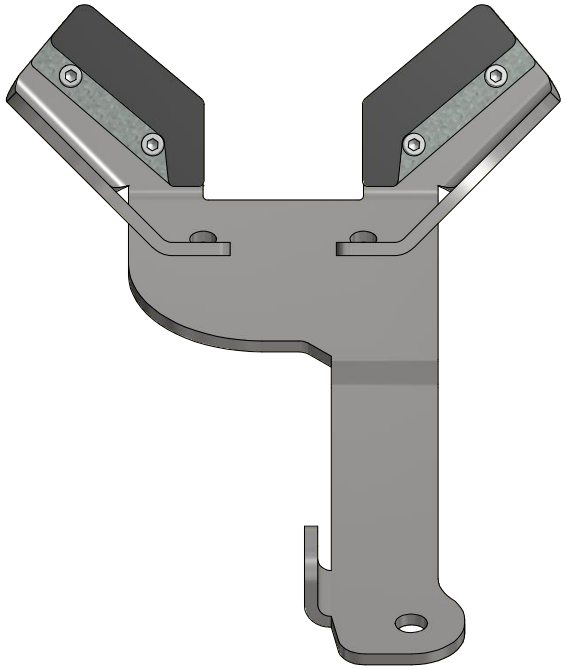

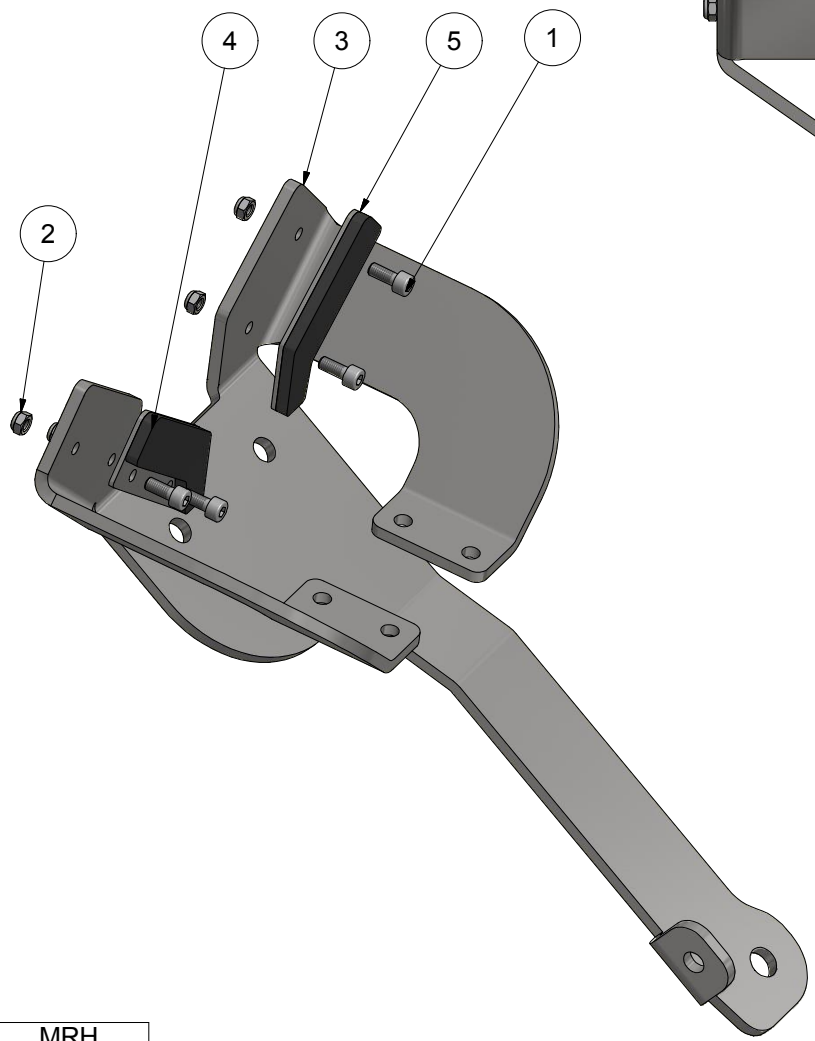

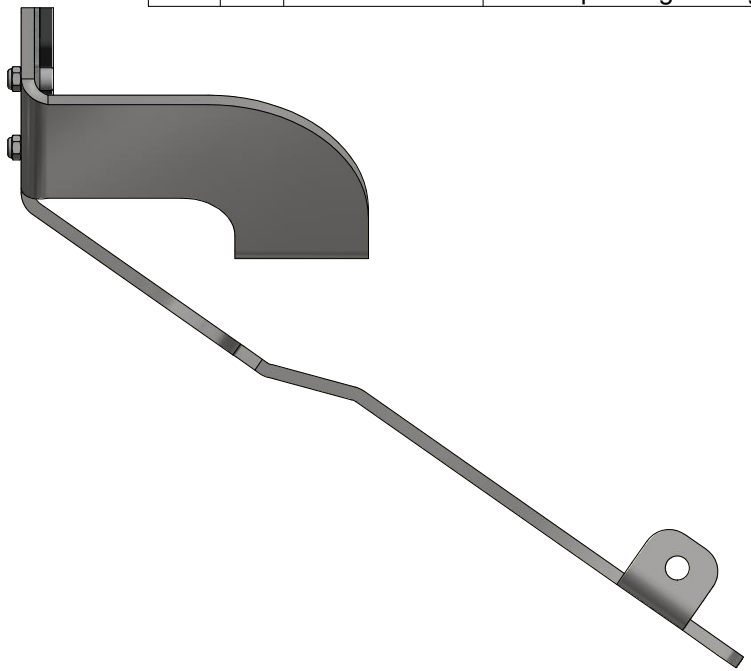

Alle kanter reifes
Breake all edges

REV	DESCRIPTION	DATE	APPROVED
A	Made	26-06-2014	MRH
B	Assembly changed	07-01-2015	MRH
C	Rubber plates changed	16-01-2015	MRH

REVISION HISTORY

The document is strictly confidential and may not in no account be copied or discloses to any third person.
HEDENSTED GRUPPEN A/S

Hedensted Gruppen

Scale: 1 : 2	Ikke angivet tolerancer iht./ Not specificed tolerance according to: DS/ISO 2768-m	Sheet size: A3
	Overfl. beskaffenhed/Surface properties: No	Sheet: 1 /1
Part No.: M100717	Material:	
Description: Front skin clamp		
Description:		

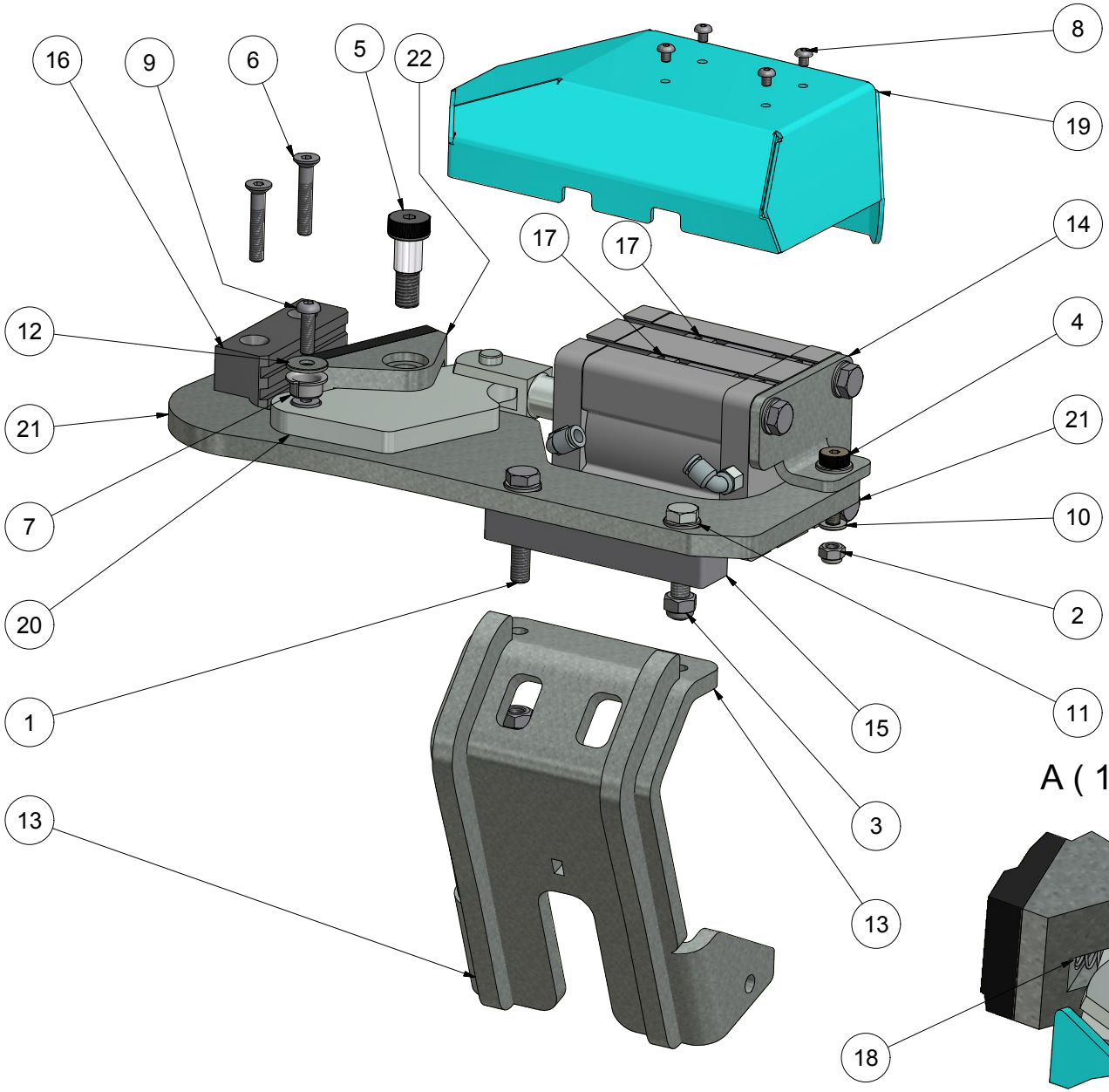

PARTS LIST			
ITEM	QTY	PART NUMBER	DESCRIPTION
1	2	11408045	Hexagon bolt M8x45 FZB
2	1	17906000	Self-locking nut M6 FZB
3	2	17908000	Self-locking nut M8 FZB
4	1	20206016	Fitting bolt M6-8x16mm
5	1	20210016	Fitting bolt M10-12x16mm
6	2	20406035	Hexagon countersunk 6x35 FZB
7	1	423423	Slide Bearing PAF 12070 P10
8	4	76004005	Bolt bottonhead 4x5 FZB
9	1	76006020	Bolt buttonhead 6x20 FZB
10	1	82106000	Washer M6 FZB
11	3	82108000	Washer M8 FZB
12	1	82606000	Washer Ø6,4x18x1,6
13	1	M100670	Tail wing assembly
14	1	M100733	Cylinder assembly
15	1	M100806	Spacer for tail clamp
16	1	M100836	Top tail clamp
17	2	M100889	Groove nut 6,5x64-M4
18	1	M101120	Spring Ø0,66 D6,1 L19,05
19	1	M101123	Cover for cylinder
20	1	M101126	Clamp plate
21	1	M101129	Base for swing clamp
22	1	M101130	Swing clamp

A (1 : 1)

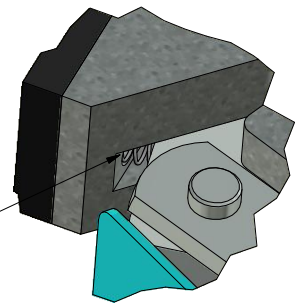

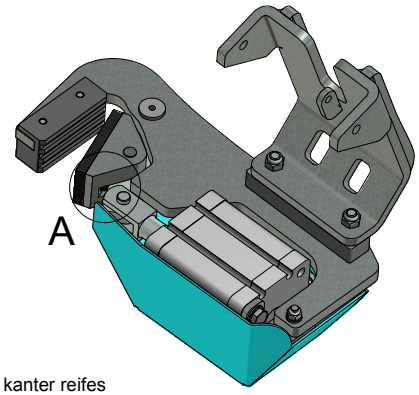

Alle kanter reifes
Breake all edges

A	Made	26-06-2014	MRH
B	Parts added	19-12-2014	MRH
REV	DESCRIPTION	DATE	APPROVED
REVISION HISTORY			

This document is strictly confidential and may in no account be copied or discloses to any third person.

HEDENSTED GRUPPEN A/S

Hedensted Gruppen

Scale: 1 : 2	Ikke angivet tolerancer iht./ Not specificed tolerance according to: DS/ISO 2768-m		Sheet size: A3
	Overfl. beskaffenhed/Surface properties: No		Sheet: 1 /1
Part No.: M100732	Material:		
Description: Tail clamp assembly			
Description:			

PARTS LIST			
ITEM	QTY	PART NUMBER	DESCRIPTION
1	3	11408016	Hexagon bolt M8x16 FZB
2	1	210370	Cylinder RA/192063/M/50
3	1	210428	Lock nut MP150190_M12x1,25
4	1	214108	F-Joint QM-57040-25
5	2	215754	Swivel elbow Mini - Ø6-1_8
6	3	82108000	Washer M8 FZB
7	1	M100649	Cylinder bracket

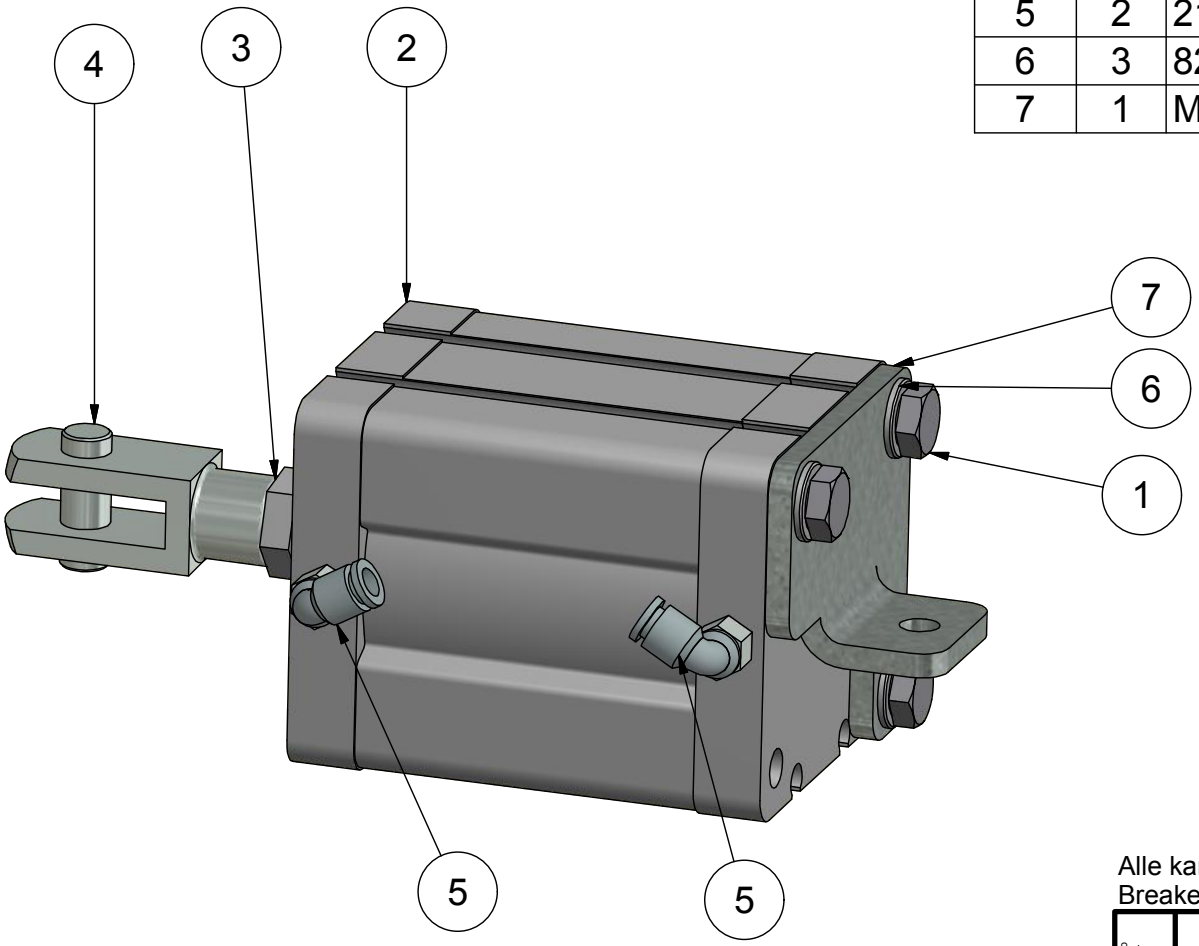

Alle kanter reifes
Breake all edges

REV	DESCRIPTION	DATE	APPROVED
A	Made	26-06-2014	MRH
B	Fitting changed	06-01-2015	MRH

REVISION HISTORY

This document is strictly confidential and must on no account be copied or disclosed to any third person.
HEDENSTED GRUPPEN A/S

Hedensted Gruppen

Scale: 1 : 1,5	Ikke angivet tolerancer iht./ Not specificed tolerance according to: DS/ISO 2768-m	Sheet size: A4
	Overfl. beskaffenhed/Surface properties: No	Sheet: 1 /1
Part No.: M100733	Material:	
Description: Cylinder assembly		
Description:		

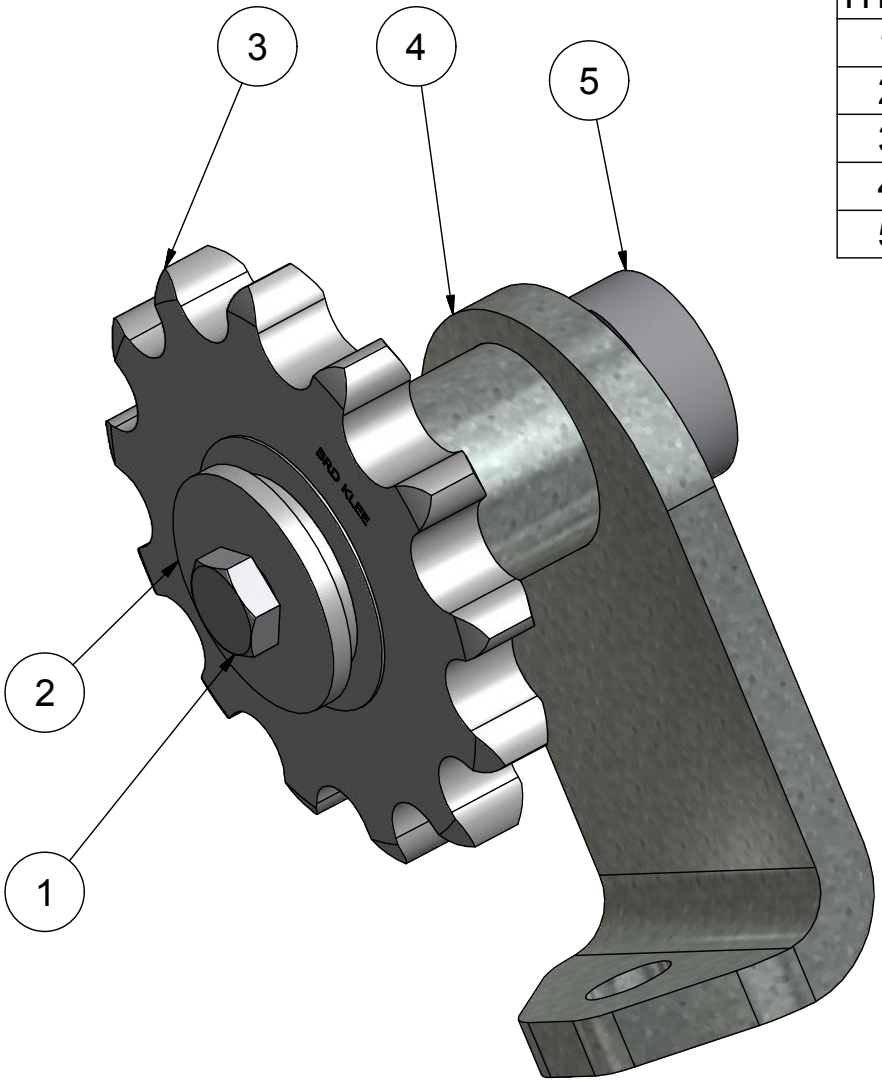

PARTS LIST			
ITEM	QTY	PART NUMBER	DESCRIPTION
1	1	11408070	Hexagon bolt M8x70 FZB
2	1	4809335	Washer SRKB Ø9x35x3 FZB
3	1	M100684	Chain wheel 12B1 Z-13 - Ø16
4	1	M100885	12B chain tensioner plate
5	1	M101104	Counter nut for tensioner

Break all edges

Revision:	Approved	Date:	Revision Description
1	HG	28-09-2015	Revision changed to numeric

This document is strictly confidential and must on no account be copied or disclosed to any third person.
HEDENSTED GRUPPEN A/S

HEDENSTED GRUPPEN

Scale: 1 : 1	Not specificed tolerance according to: DS/ISO 2768-m	Sheet size: A4
	Surface properties: No	Sheet: 1 /1
Part No.: M100743	Material:	
Description 1: Z13 chain tensioner		
Description 2:		

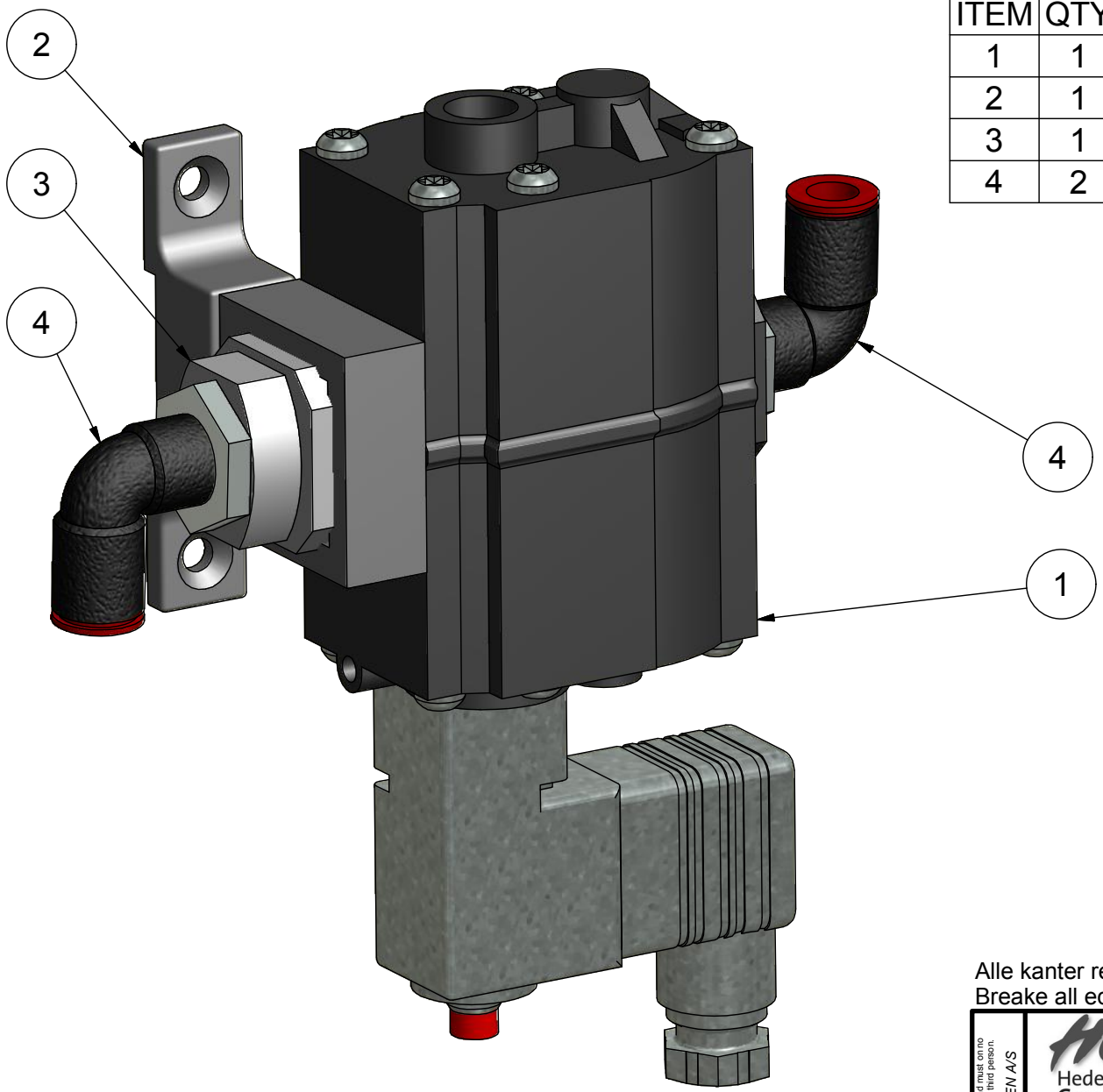

PARTS LIST			
ITEM	QTY	PART NUMBER	DESCRIPTION
1	1	197322	Soft-starter
2	1	210176	Mounting brace
3	1	210195	Insert
4	2	216537	Swirvel elbow Ø8 1/4"

Alle kanter reifes
Breake all edges

REVISION HISTORY			
A	Made	13-08-2014	MRH
B	Part list changed	05-01-2015	MRH
REV	DESCRIPTION	DATE	APPROVED

This document is strictly confidential and must on no account be copied or disclosed to any third person.
HEDENSTED GRUPPEN A/S

Hedensted Gruppen

Scale: 1 : 1	Ikke angivet tolerancer iht./ Not specificed tolerance according to: DS/ISO 2768-m		Sheet size: A4
	Overfl. beskaffenhed/Surface properties: No		Sheet: 1 /1
Part No.: M100767	Material:		
Description: Soft-starter assembly			
Description: HG quick skin 14			

Product data:

Gear: STM- RMI50P
Ratio: 1:15
Flange: IEC 80 B14
Hole: ø25H7
Mounting: M2/M4 (oil level)
Motor: 0,75kW 1400rpm IEC80 B14 230/400V
Breake: 230V activation

- The motor runs with frequency converter -

PARTS LIST			
ITEM	QTY	PART NUMBER	DESCRIPTION
1	1	30292	Motor TFS80B4 with brake
2	1	600455	Cabel gland M20 Ø5-12
3	1	M100740	Gear - RMI50/P/80B14/D25/I15

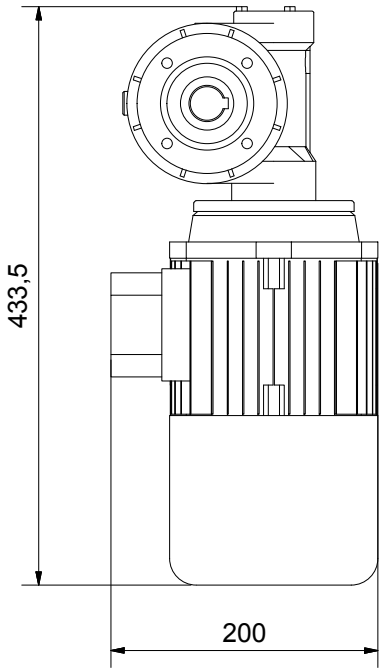

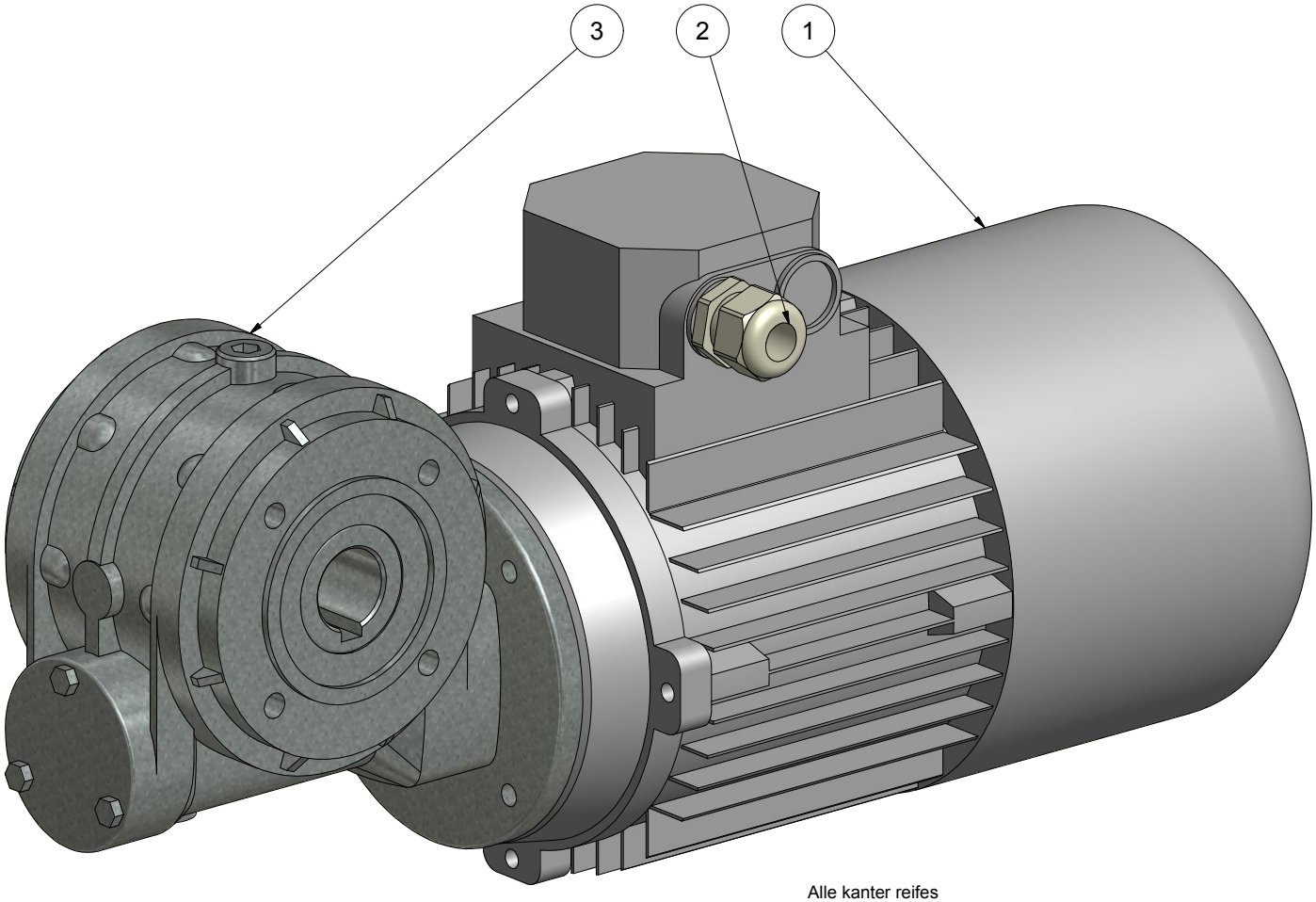

Alle kanter reifes
Breake all edges

REV	DESCRIPTION	DATE	APPROVED
A	Made	05-08-2014	MRH
B	Motoer changed	25-08-2014	MRH

REVISION HISTORY

The document is strictly confidential and may in no account be copied or disclosed to any third person.
HEDENSTED GRUPPEN A/S

Hedensted Gruppen

Scale:

Ikke angivet tolerancer iht./ Not specificed tolerance according to: DS/ISO 2768-m

Sheet size: A3

Overfl. beskaffenhed/Surface properties: No

Sheet: 1 /1

Part No.: M100745

Material:

Description: Gearbreakmotor RMI50P-0,75kw 1400rpm

Description:

PARTS LIST			
ITEM	QTY	PART NUMBER	DESCRIPTION
1	1	206694	Panel mounting nut 2962-89
2	1	214180	Mounting brace
3	1	215550	Gauge 0-10 bar 1/8" Ø40
4	2	215765	Swirvel elbow Ø6mm 1/4"
5	1	216204	Regulator 1/4" 0-10bar

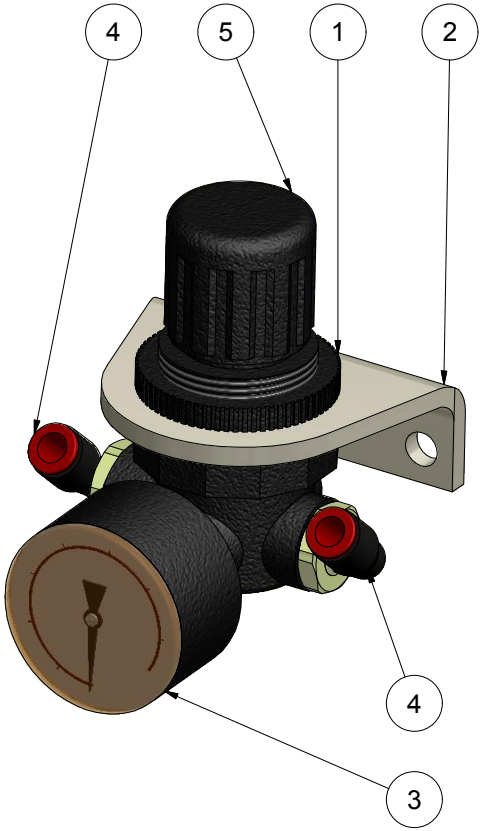

Alle kanter reifes
Breake all edges

	Scale:	Ikke angivet tolerancer iht./ Not specificed tolerance according to: DS/ISO 2768-m	Sheet size: A3
		Overfl. beskaffenhed/Surface properties: No	Sheet: 1 /1
Part No.: M100821	Material:		
Description: Regulator unit			
Description:			

The document is strictly confidential and may not in no account be copied or discloses to any third person.
HEDENSTED GRUPPEN A/S

A	Made	15-10-2014	MRH
REV	DESCRIPTION	DATE	APPROVED
REVISION HISTORY			

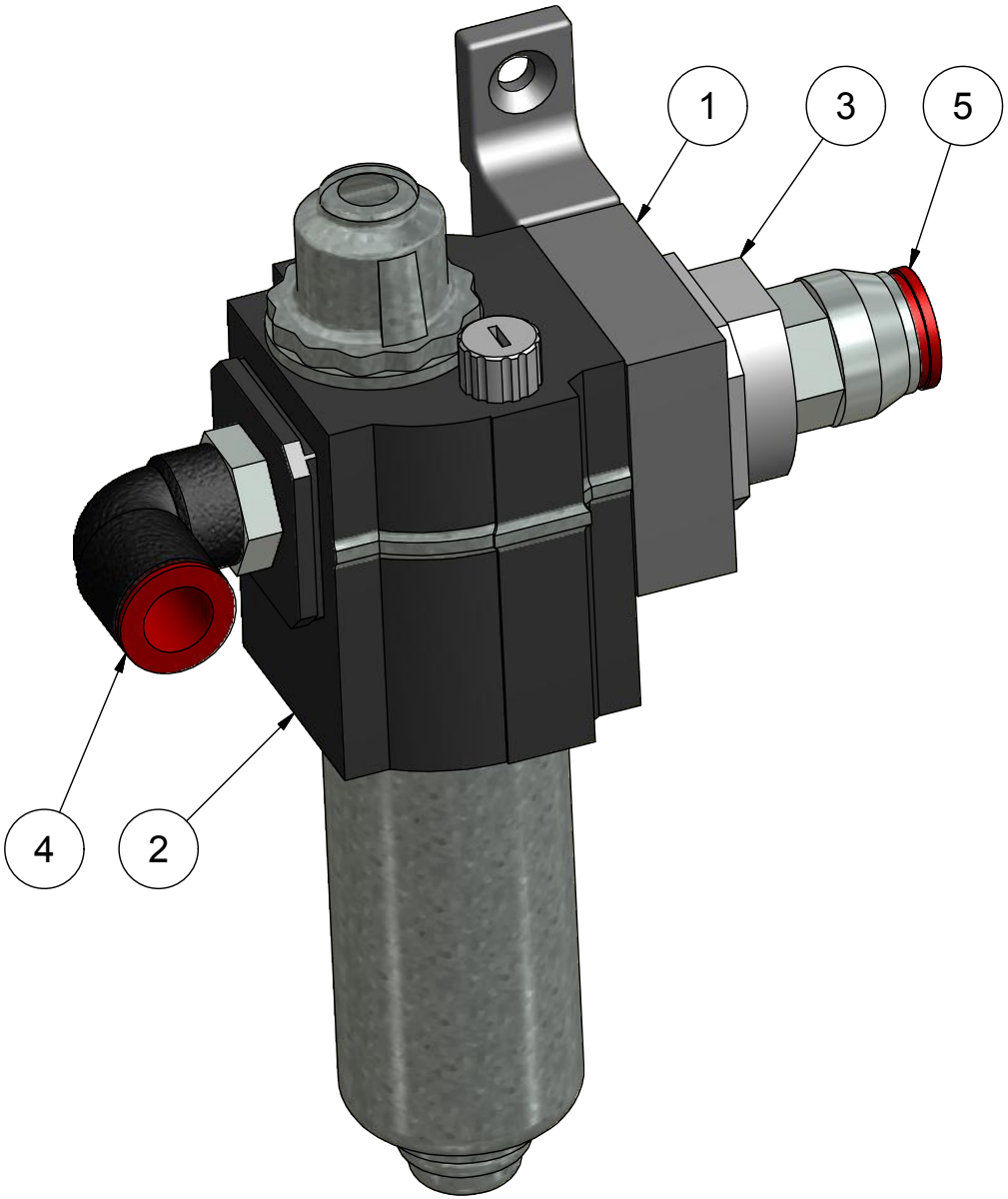

PARTS LIST			
ITEM	QTY	PART NUMBER	DESCRIPTION
1	1	210176	Mounting brace
2	1	210185	Sight feed lubricator
3	1	210195	Insert
4	1	215778	Swirvel elbow Ø10 1-4
5	1	215940	Straight connector Ø10 1-4

Alle kanter reifes
Breake all edges

REV	DESCRIPTION	DATE	APPROVED
A	Made	06-01-2014	MRH

REVISION HISTORY

This document is strictly confidential and must on no account be copied or disclosed to any third person.
HEDENSTED GRUPPEN A/S

Hedensted Gruppen

Scale: 1 : 1	Ikke angivet tolerancer iht./ Not specificed tolerance according to: DS/ISO 2768-m	Sheet size: A4
	Overfl. beskaffenhed/Surface properties: No	Sheet: 1 /1
Part No.: M100886	Material:	
Description: Lubricator assembly		
Description:		

Customer: Hedensted Gruppen A/S

Project: HG Quick Skin 14

Hedensted Gruppen A/S
Vejlevej 15a
DK-8722 Hedensted
TLF: 75 89 12 44
FAX: 75 89 11 80

Index

Information D
21-08-2012 12:44:52

Declaration of incorporation E
21-08-2012 12:44:52

Main Circuit 1
07-08-2014 09:31:58

Main Circuit 2
08-02-2016 08:50:10

230VAC & 24VDC Control Circuit 3
22-01-2015 14:12:18

Safe plc 3A
15-04-2015 10:55:58

Emergency stop relay 4
22-01-2015 14:15:54

Emergency stop Circuit 5
22-01-2015 14:14:56

Frequency converter Control circuit 6
15-04-2015 10:55:44

PLC 7
26-01-2015 11:45:10

PLC Input X0 - X7 8
22-01-2015 14:11:34

PLC Input X10 - X15 9
22-01-2015 14:14:08

PLC Input X16 - X25 10
15-01-2015 09:44:38

PLC Input X26 - X27 / X30 - X33 11
21-01-2015 11:52:16

PLC Output Y0 - Y7 12
26-01-2015 11:49:36

PLC Output Y10 - Y17 13
15-01-2015 10:09:48

PLC Output Y20 - Y23 14
15-04-2015 11:50:06

PLC list 15
26-01-2015 11:48:58

Cable list 17
15-04-2015 13:14:52

Information

WIRE IDENTIFICATION:

The wire is identified with the terminal number of the component.

WIRE COLOUR:

MAIN CIRCUIT:	Phase	Black
	Neutral	Light blue
DC CONTROL CIRCUIT:	24VDC	Dark blue
	0VDC	White

THE FOLLOWING COLOUR ID IS TAKEN FROM DS/EN 60757

BK BLACK
BN BROWN
RD RD
OG ORANGE
YE YELLOW
GN GREEN
BU BLUE
VT VIOLET
GY GREY
WH WHITE
PK PINK

ALL SYMBOLS USED IS TAKEN FROM DS/EN 166

DECLARATION OF INCORPORATION

Directive 2006/42/EF, Annex II, B

Manufacturer

Firm: VS AUTOMATIC A/S
Address: Ormhøjgårdvej 15
DK-8700 Horsens

Phone: +45 75 64 18 99
Fax: +45 75 64 18 09
Email: info@vs-automatic.dk

Herewith declares that

Component: Controlpanel
Type: QS 2014.03 400v Year of manufator: 2014

is intended to be incorporated into machinery or to be assembled with other machinery to constitude machinery covered by Directive 2006/42/EC

does therefor not in every respect comply with the provisions of this directive

does comply with the provisions of the following other EC directives

EC directives

EC machine directive 89/392/EEC, as per 91/386/EEC, 93/68/EEC, 93/44/EEC

EC low-voltage directives 73/23/EEC, as per 93/68/EEC, 93/465/EEC

EC EMC directive 89/336/EEC as per 92/31/EEC, 93/68/EEC, 93/465/EEC

Harmonized standards

EN60204-1 Safety of Machinery Electrical Equipment of Machines

EN60439-1 Low-voltage switchgear and controlgear assemblies part 1: Type-tested and partially type-tested assemblies

And furthermore declares that it is not allowed to put the machinery into service until the machinery into which it is to be incorporated or of which it si to be a component has been found and declarede to be in conformity with the provisions of Directive 98/37/EC and with national implementation legislation i.e. as a whole, including the machinery referred to in this declaration

Machine: HG Quick Skin 14
Machine No.:
Type: Year of manufactor: 2014
Manufactor: Hedensted Gruppen A/S

Indentification of signature:

Firm: VS AUTOMATIC A/S
Address: Ormhøjgårdvej 15
DK-8700 Horsens

Date: Signature

08-02-2016 ---------- ----------
Torben Steffensen

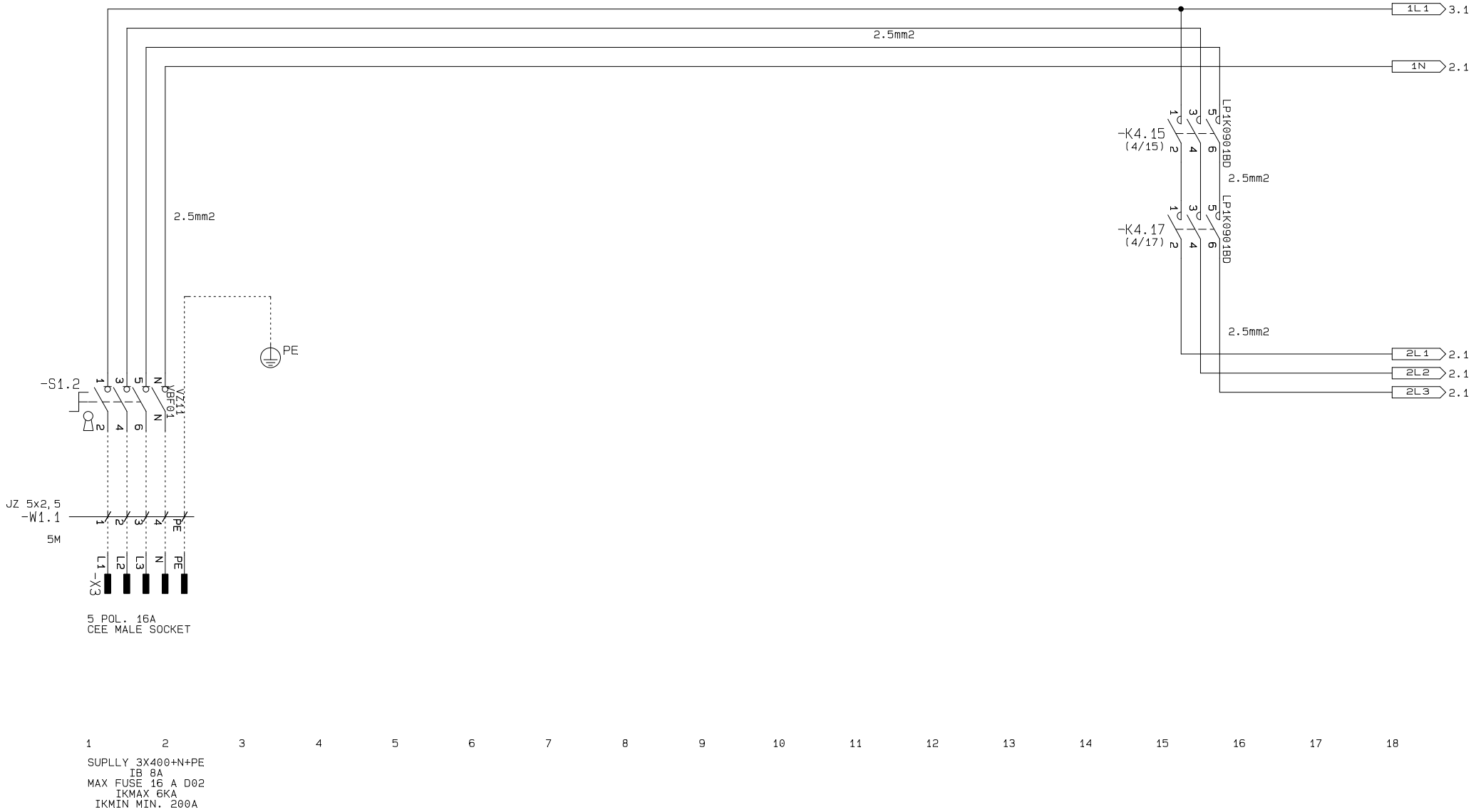
1L1
3.1
2.5mm2
1N
2.1
-K4.15
(4/15)
LP1K0901BD
2.5mm2
-K4.17
(4/17)
LP1K0901BD
2.5mm2
2.5mm2
2L1
2.1
2L2
2.1
2L3
2.1
PE
-S1.2
VZ11.1
VBF01
JZ 5x2,5
-W1.1
5M
PE
L1
L2
L3
N
PE
-X3
5 POL. 16A
CEE MALE SOCKET
1 2 3 4 5 6 7 8 9 10 11 12 13 14 15 16 17 18
SUPLLY 3X400+N+PE
IB 8A
MAX FUSE 16 A D02
IKMAX 6KA
IKMIN MIN. 200A

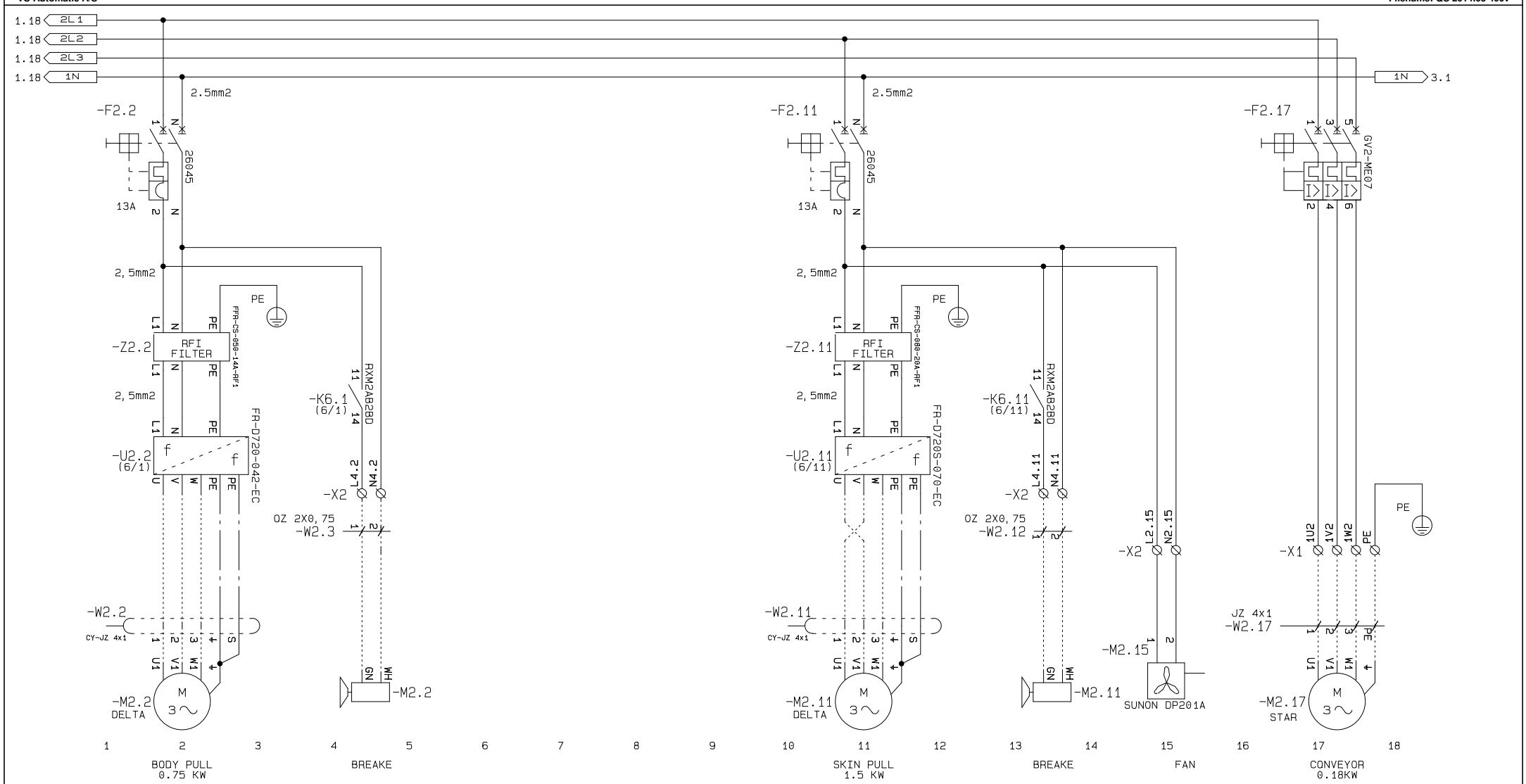
1.18 2L1
1.18 2L2
1.18 2L3
1.18 1N
1N 3.1
2.5mm2
-F2.2
26045
13A
2, 5mm2
PE
-Z2.2
RFI FILTER
FFR-CS-050-14A-RF1
-U2.2 (6/1)
FR-D720-042-EC
-K6.1 (6/1)
RXM2AB2BD
-X2
OZ 2X0, 75
-W2.3
-W2.2
CY-JZ 4x1
-M2.2
DELTA
-M2.2
-F2.11
-Z2.11
FFR-CS-080-28A-RF1
-U2.11 (6/11)
FR-D720S-070-EC
-K6.11 (6/11)
-W2.12
-W2.11
-M2.11
DELTA
-M2.11
-F2.17
GV2-ME07
L2.15
N2.15
-M2.15
SUNON DP201A
-X1
JZ 4x1
-W2.17
-M2.17
STAR
BODY PULL
0.75 KW
BREAKE
SKIN PULL
1.5 KW
BREAKE
FAN
CONVEYOR
0.18KW

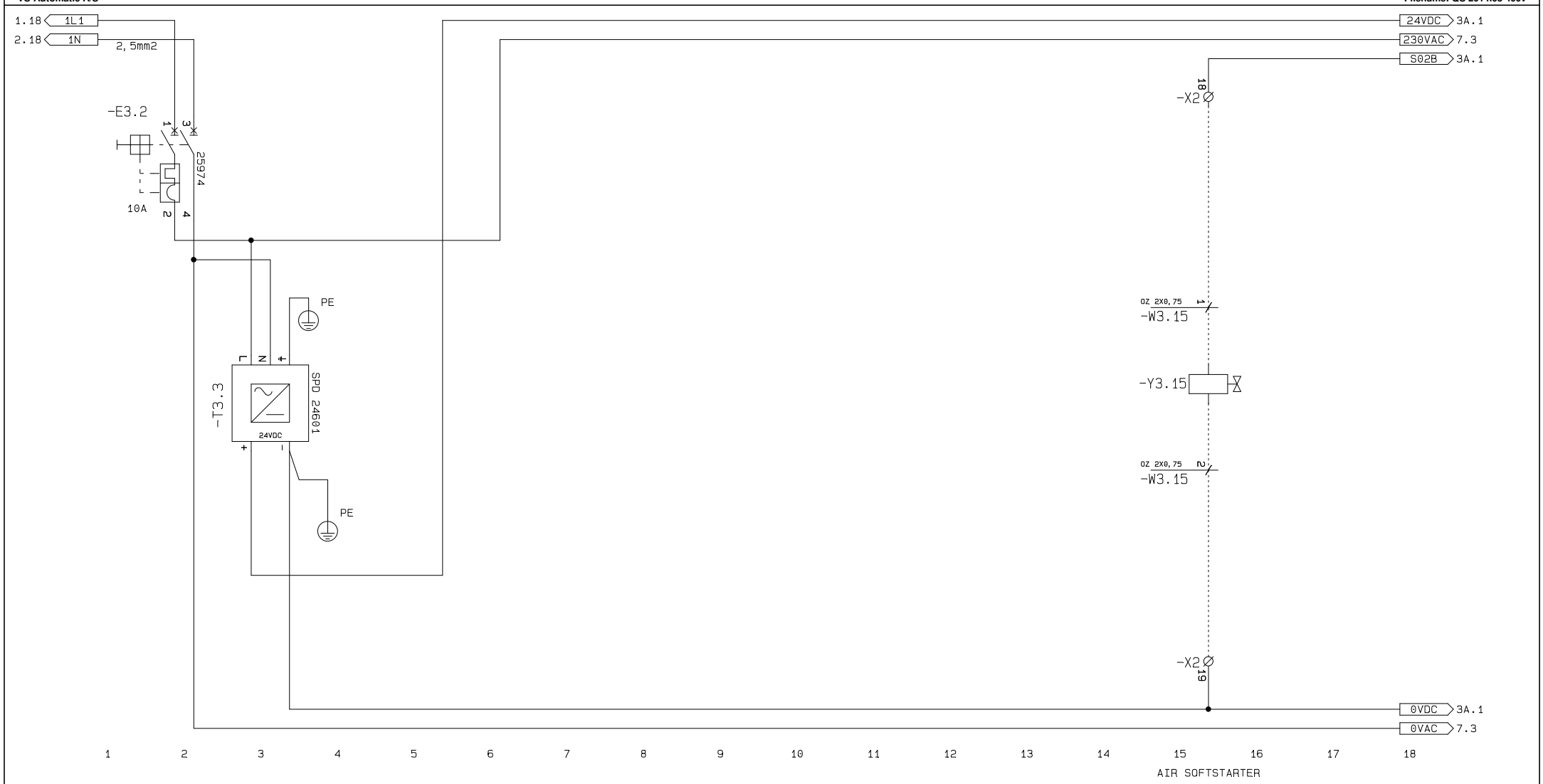
1.18 1L1
2.18 1N
2,5mm2
24VDC 3A.1
230VAC 7.3
S02B 3A.1
-E3.2
1
3
25974
10A
2
4
18
-X2
PE
L
N
+
SPD 24601
-T3.3
24VDC
-
PE
0Z 2X0,75
1
-W3.15
-Y3.15
0Z 2X0,75
2
-W3.15
-X2
19
0VDC 3A.1
0VAC 7.3
1 2 3 4 5 6 7 8 9 10 11 12 13 14 15 16 17 18
AIR SOFTSTARTER

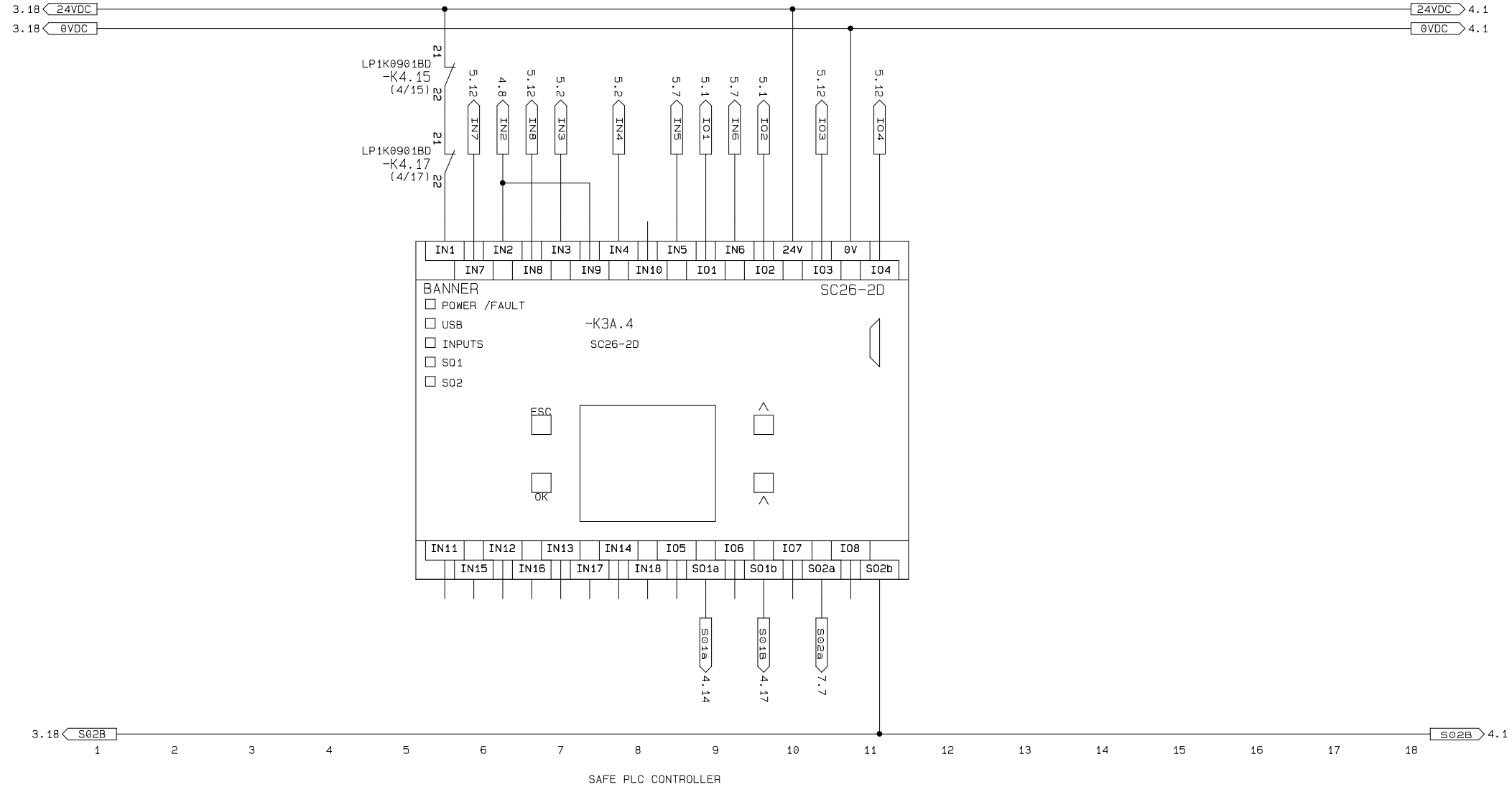

SAFE PLC CONTROLLER

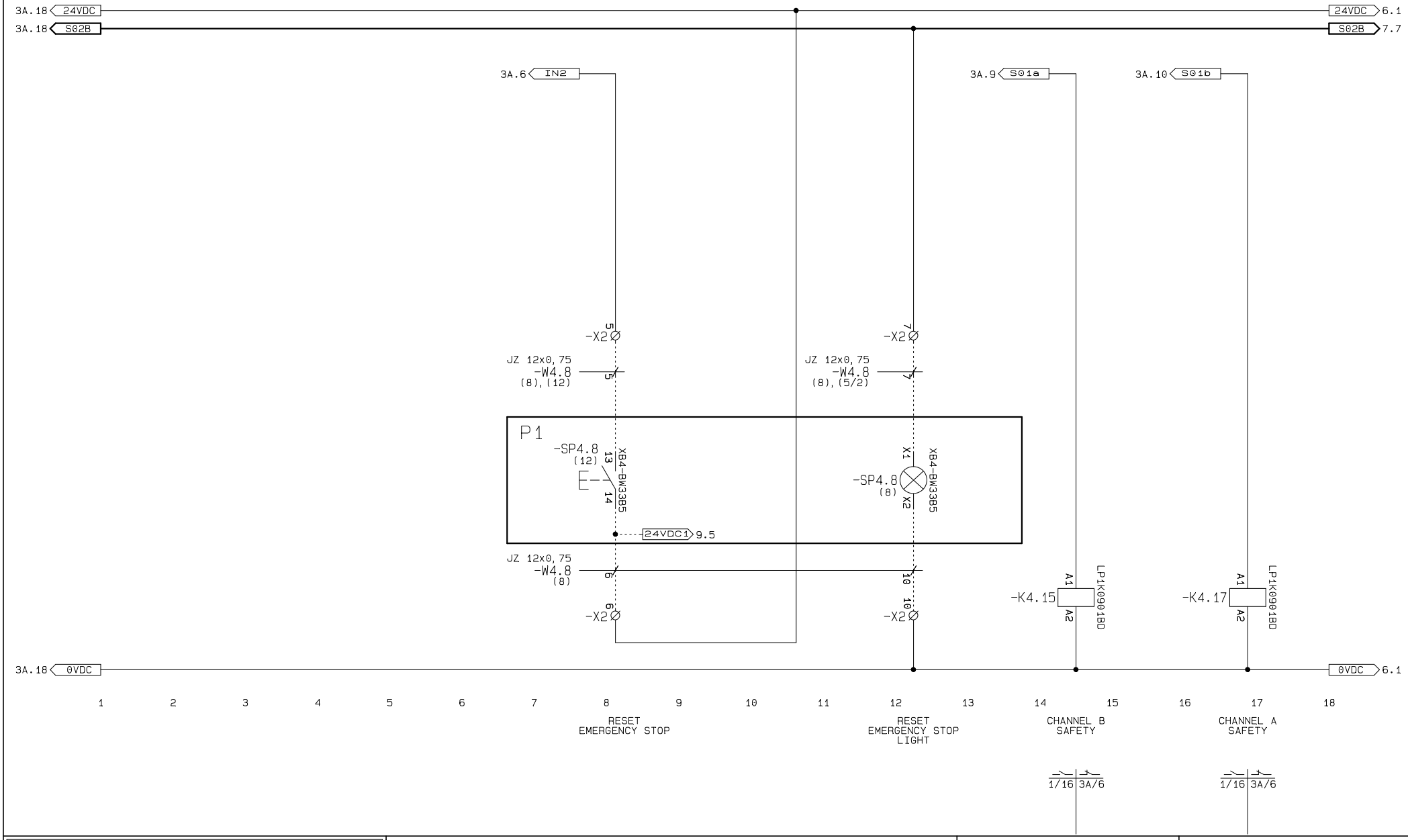
3A.18 24VDC
3A.18 S02B
24VDC 6.1
S02B 7.7
3A.6 IN2
3A.9 S01a
3A.10 S01b
-X2
JZ 12x0,75
-W4.8
(8),(12)
(8),(5/2)
P1
-SP4.8
(12)
XB4-BW3B5
13
14
X1
X2
(8)
24VDC1 9.5
(8)
-K4.15
-K4.17
A1
A2
LP1K0901BD
3A.18 0VDC
0VDC 6.1
1 2 3 4 5 6 7 8 9 10 11 12 13 14 15 16 17 18
RESET
EMERGENCY STOP
RESET
EMERGENCY STOP
LIGHT
CHANNEL B
SAFETY
CHANNEL A
SAFETY
1/16 3A/6
1/16 3A/6

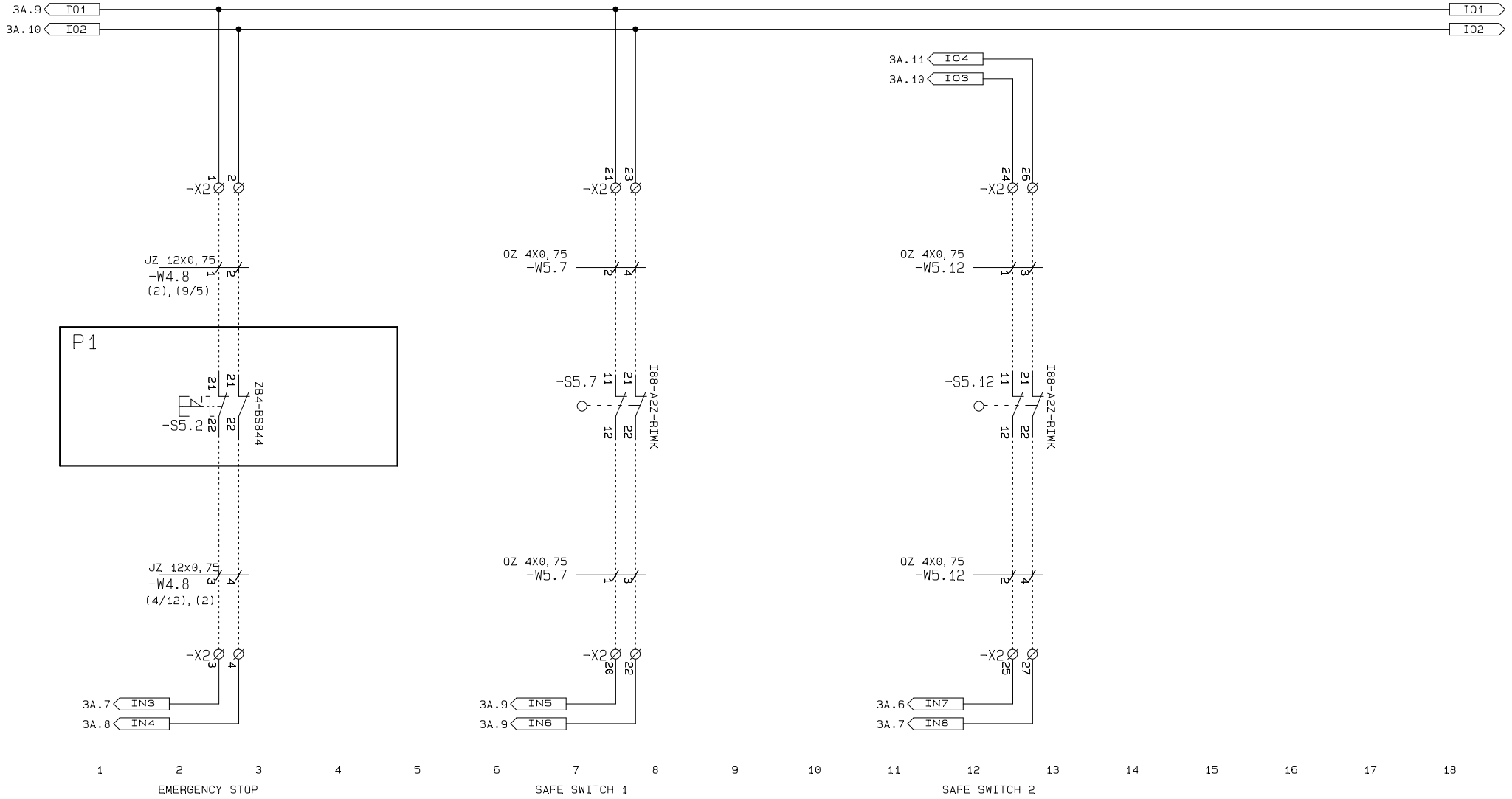
3A.9 IO1
3A.10 IO2
IO1
IO2
3A.11 IO4
3A.10 IO3
-X2
JZ 12x0,75
-W4.8
(2),(9/5)
(4/12),(2)
OZ 4X0,75
-W5.7
-W5.12
P1
-S5.2
ZB4-BS844
-S5.7
-S5.12
IB8-A2Z-RIWK
3A.7 IN3
3A.8 IN4
3A.9 IN5
3A.9 IN6
3A.6 IN7
3A.7 IN8
EMERGENCY STOP
SAFE SWITCH 1
SAFE SWITCH 2

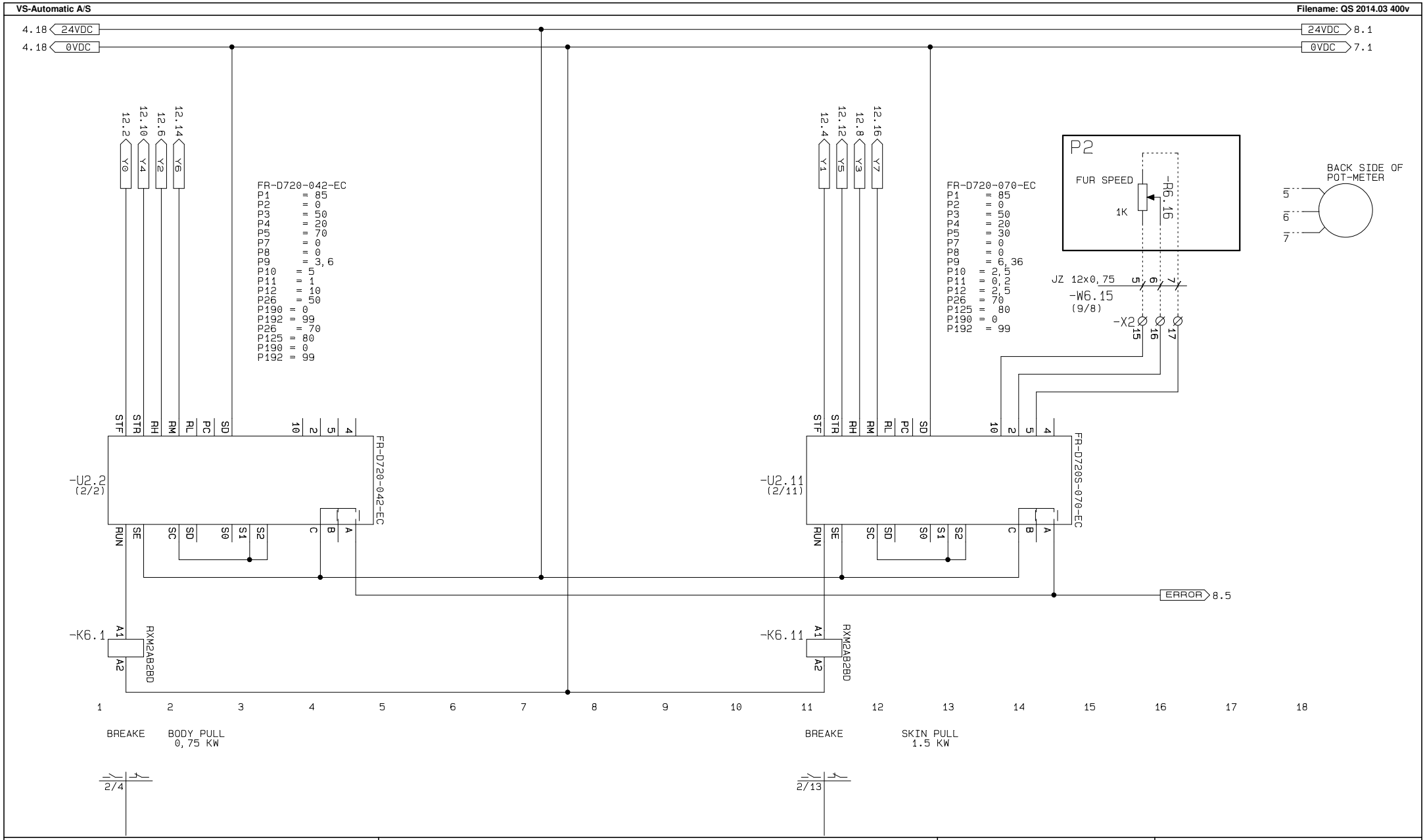

VS AUTOMATIC Tlf. 75 64 18 99 - vs-automatic.dk En del af TS-GRUPPEN - Danmarks stærkeste El & Energi Installatør	Customer: Hedensted Gruppen A/S	Designer: TBT	Case no:QS 2014.03 400v
	Project: HG Quick Skin 14	Last prt: 08-02-2016	Page ref.:
	Pagetitle: Frequency converter Control circuit	Last changed: 15-04-2015	Page: 6 of 19

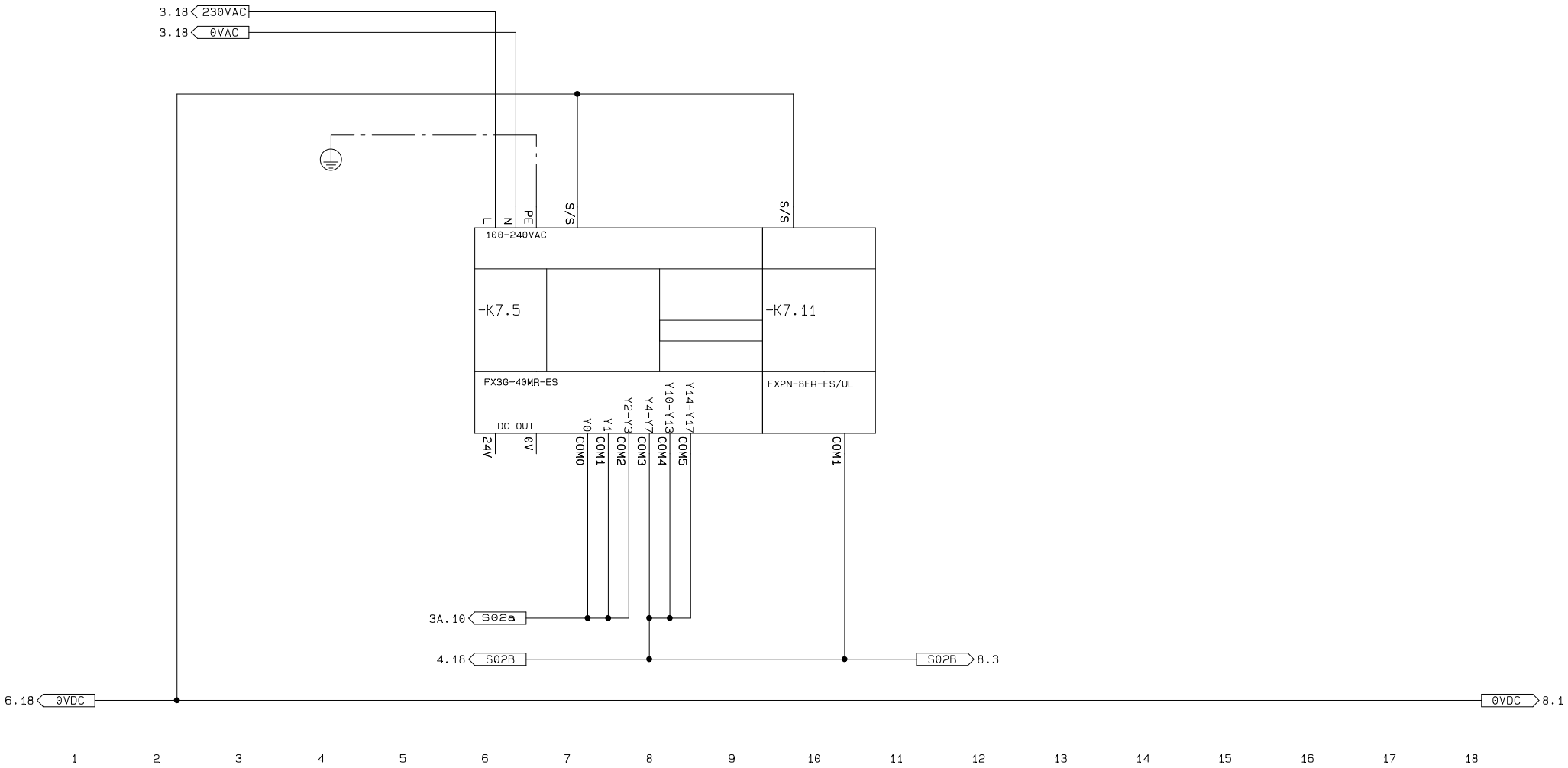
3.18 230VAC
3.18 0VAC
L
N
PE
S/S
S/S
100-240VAC
-K7.5
-K7.11
FX3G-40MR-ES
FX2N-8ER-ES/UL
DC OUT
24V
0V
Y0
Y1
Y2-Y3
Y4-Y7
Y10-Y13
Y14-Y17
COM0
COM1
COM2
COM3
COM4
COM5
COM1
3A.10 S02a
4.18 S02B
S02B 8.3
6.18 0VDC
0VDC 8.1
1
2
3
4
5
6
7
8
9
10
11
12
13
14
15
16
17
18

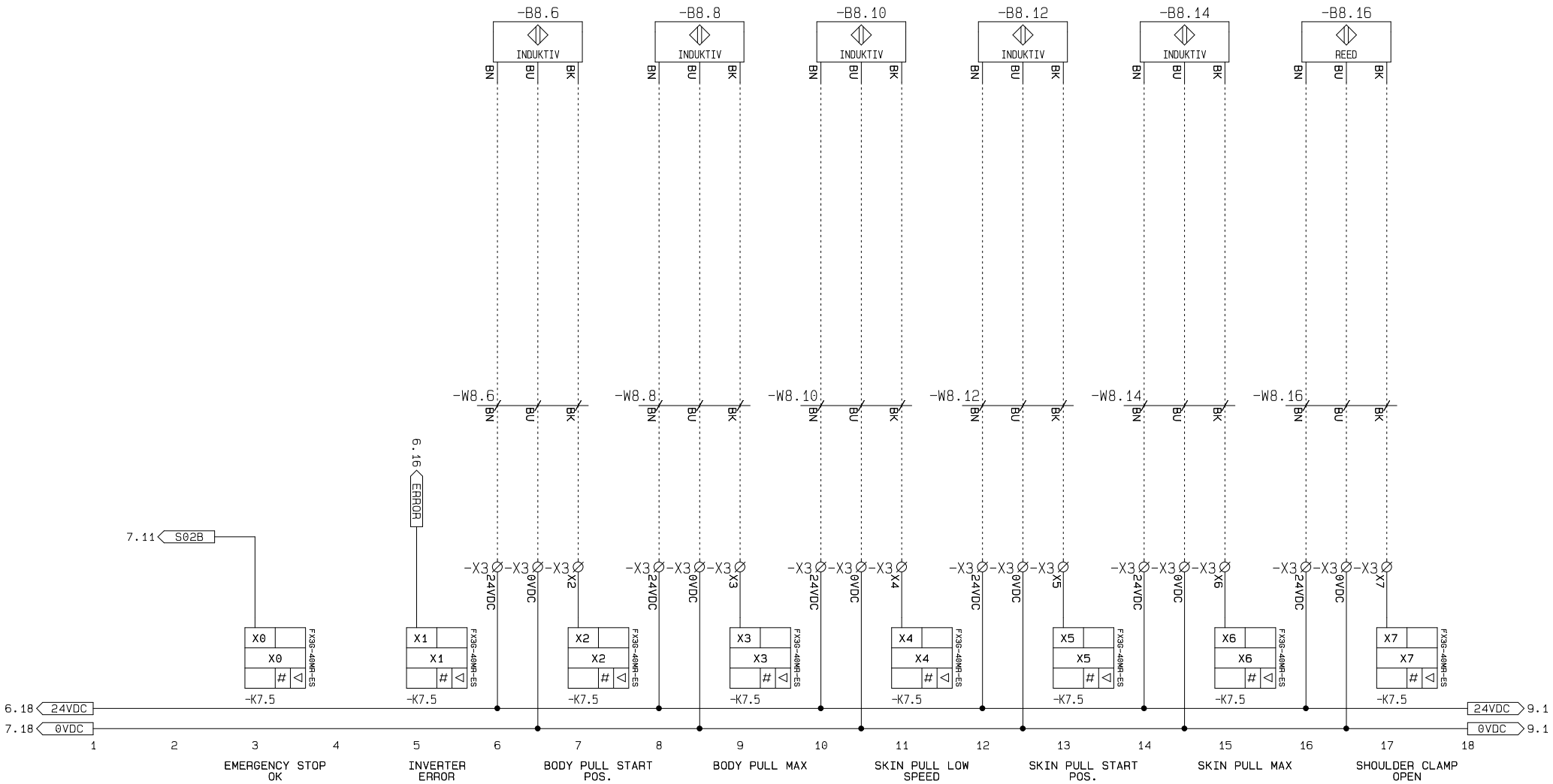
-B8.6
INDUKTIV
-B8.8
INDUKTIV
-B8.10
INDUKTIV
-B8.12
INDUKTIV
-B8.14
INDUKTIV
-B8.16
REED
BN BU BK
-W8.6
-W8.8
-W8.10
-W8.12
-W8.14
-W8.16
6.16 ERROR
7.11 S02B
-X3 24VDC
-X3 0VDC
-X3 X2
-X3 X3
-X3 X4
-X3 X5
-X3 X6
-X3 X7
X0
X1
X2
X3
X4
X5
X6
X7
FX3G-40MR-ES
-K7.5
6.18 24VDC
7.18 0VDC
24VDC 9.1
0VDC 9.1
1 2 3 4 5 6 7 8 9 10 11 12 13 14 15 16 17 18
EMERGENCY STOP OK
INVERTER ERROR
BODY PULL START POS.
BODY PULL MAX
SKIN PULL LOW SPEED
SKIN PULL START POS.
SKIN PULL MAX
SHOULDER CLAMP OPEN

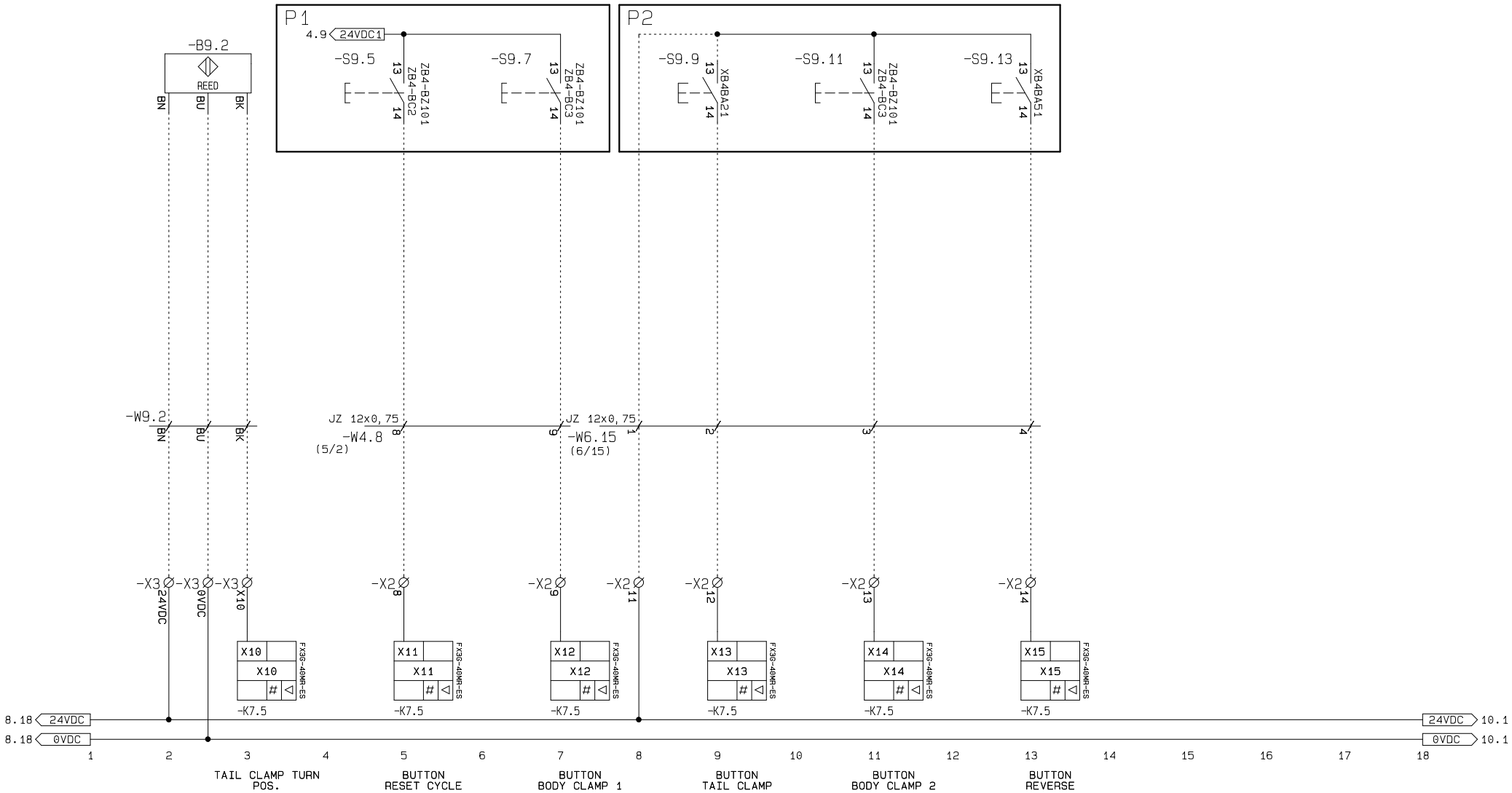
P1
P2
4.9 24VDC1
-B9.2
REED
BN BU BK
-S9.5
ZB4-BZ101
ZB4-BC2
-S9.7
ZB4-BZ101
ZB4-BC3
-S9.9
XB4BA21
-S9.11
ZB4-BZ101
ZB4-BC3
-S9.13
XB4BA51
-W9.2
JZ 12x0,75
-W4.8
(5/2)
-W6.15
(6/15)
-X3 24VDC
-X3 0VDC
-X3 X10
-X2 8
-X2 9
-X2 11
-X2 12
-X2 13
-X2 14
X10
X11
X12
X13
X14
X15
FX3G-40MR-ES
-K7.5
8.18 24VDC
8.18 0VDC
24VDC 10.1
0VDC 10.1
TAIL CLAMP TURN POS.
BUTTON RESET CYCLE
BUTTON BODY CLAMP 1
BUTTON TAIL CLAMP
BUTTON BODY CLAMP 2
BUTTON REVERSE

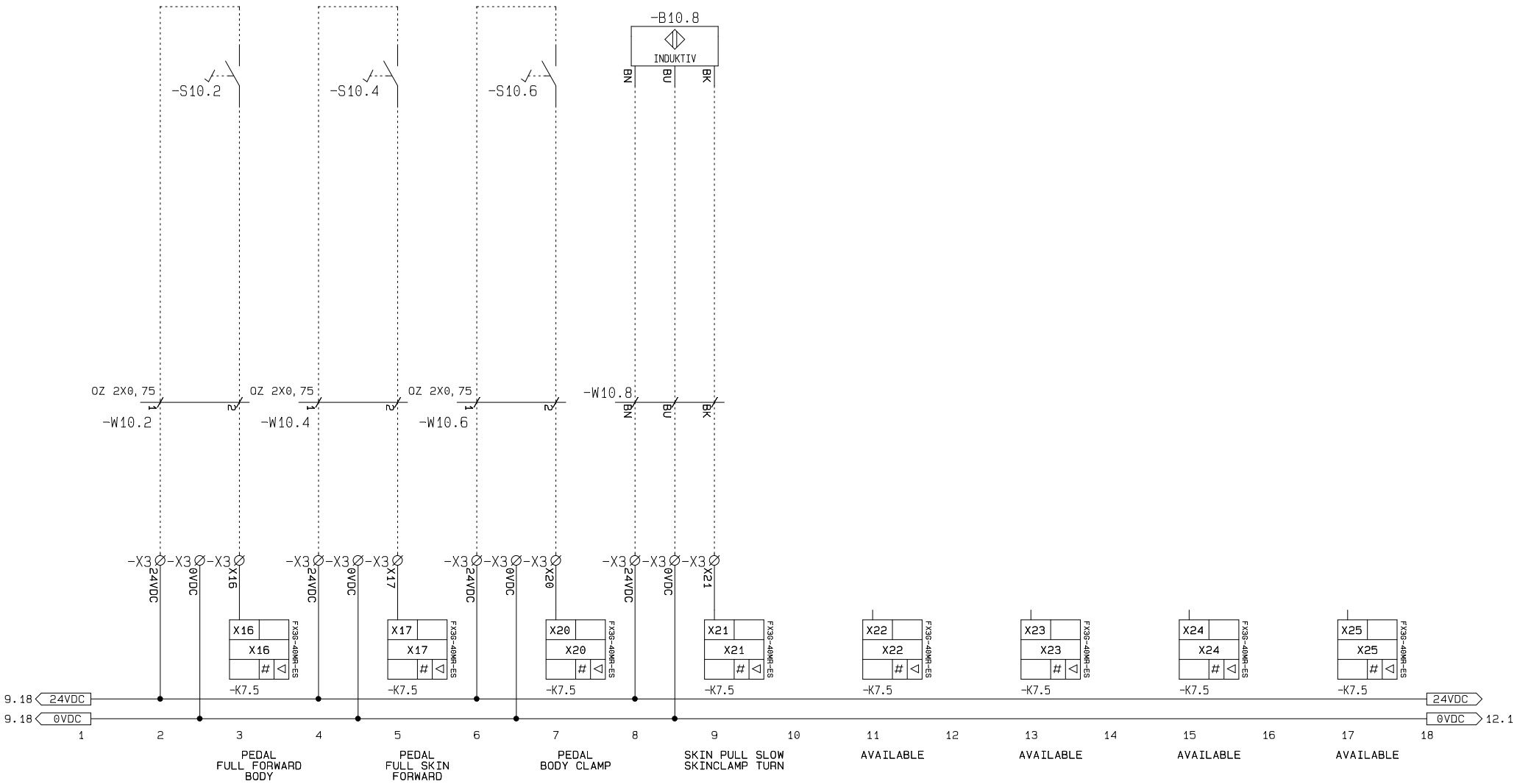
-S10.2
-S10.4
-S10.6
-B10.8
INDUKTIV
BN
BU
BK
OZ 2X0,75
-W10.2
-W10.4
-W10.6
-W10.8
-X3
24VDC
0VDC
X16
X17
X20
X21
X22
X23
X24
X25
FX3G-40MR-ES
-K7.5
9.18
12.1
PEDAL FULL FORWARD BODY
PEDAL FULL SKIN FORWARD
PEDAL BODY CLAMP
SKIN PULL SLOW SKINCLAMP TURN
AVAILABLE
AVAILABLE
AVAILABLE
AVAILABLE

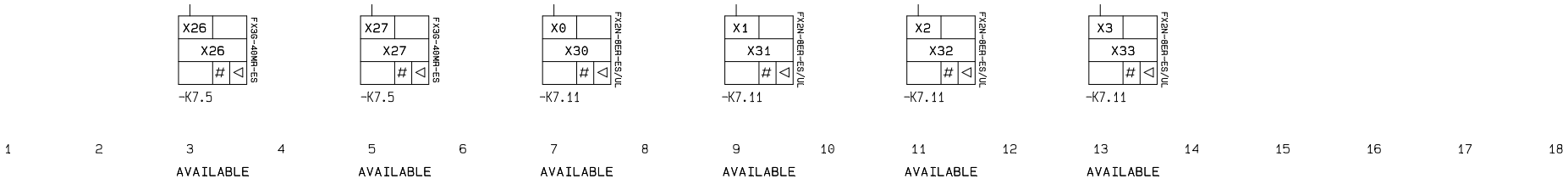
X26
X26
FX3G-40MR-ES
-K7.5
X27
X27
FX3G-40MR-ES
-K7.5
X0
X30
FX2N-8ER-ES/UL
-K7.11
X1
X31
FX2N-8ER-ES/UL
-K7.11
X2
X32
FX2N-8ER-ES/UL
-K7.11
X3
X33
FX2N-8ER-ES/UL
-K7.11
1 2 3 4 5 6 7 8 9 10 11 12 13 14 15 16 17 18
AVAILABLE
AVAILABLE
AVAILABLE
AVAILABLE
AVAILABLE
AVAILABLE

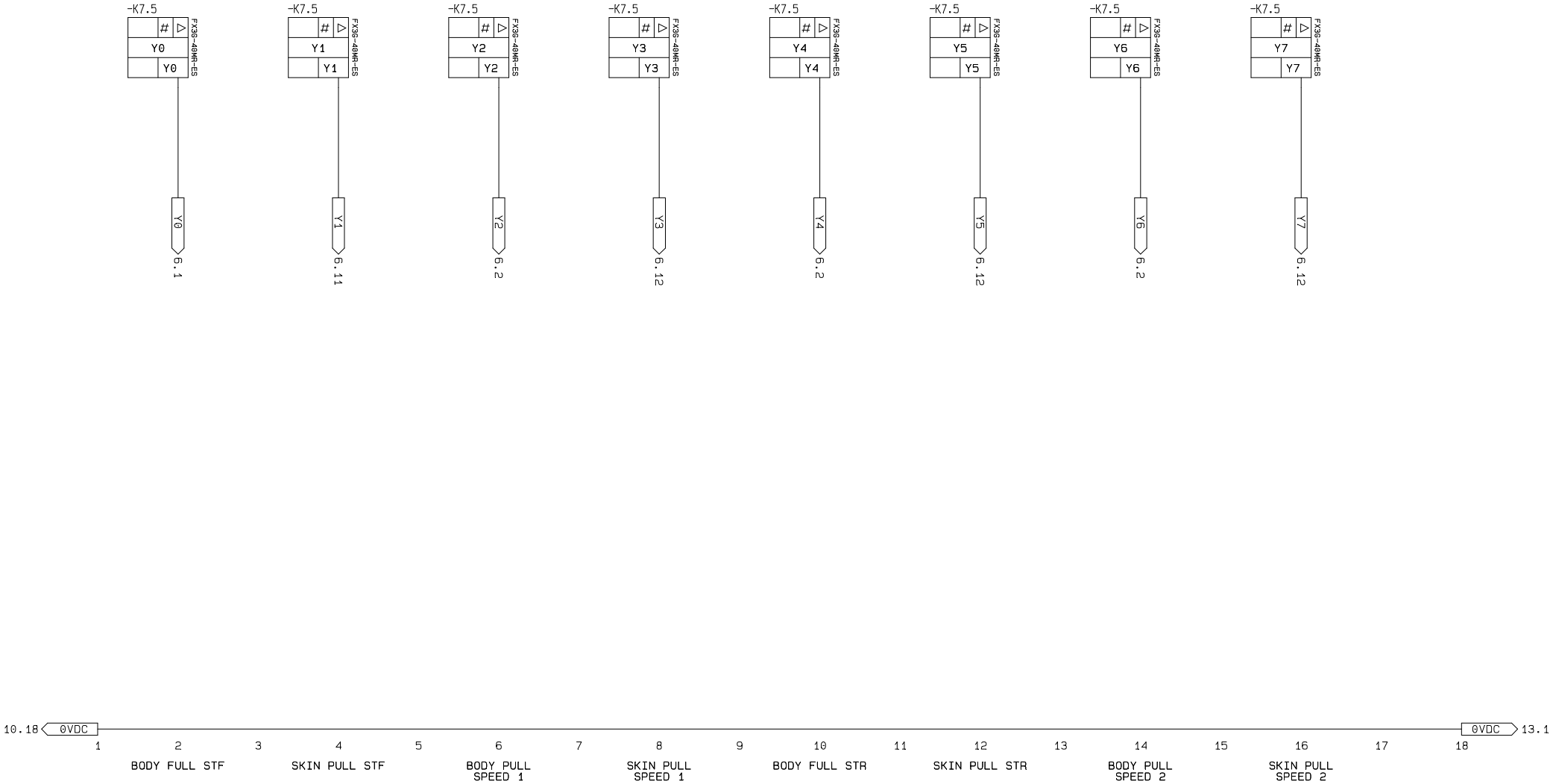
-K7.5
FX3G-40MR-ES
Y0
Y0
Y0
6.1
-K7.5
FX3G-40MR-ES
Y1
Y1
Y1
6.11
-K7.5
FX3G-40MR-ES
Y2
Y2
Y2
6.2
-K7.5
FX3G-40MR-ES
Y3
Y3
Y3
6.12
-K7.5
FX3G-40MR-ES
Y4
Y4
Y4
6.2
-K7.5
FX3G-40MR-ES
Y5
Y5
Y5
6.12
-K7.5
FX3G-40MR-ES
Y6
Y6
Y6
6.2
-K7.5
FX3G-40MR-ES
Y7
Y7
Y7
6.12
10.18
0VDC
0VDC
13.1
1
2
3
4
5
6
7
8
9
10
11
12
13
14
15
16
17
18
BODY FULL STF
SKIN PULL STF
BODY PULL SPEED 1
SKIN PULL SPEED 1
BODY FULL STR
SKIN PULL STR
BODY PULL SPEED 2
SKIN PULL SPEED 2

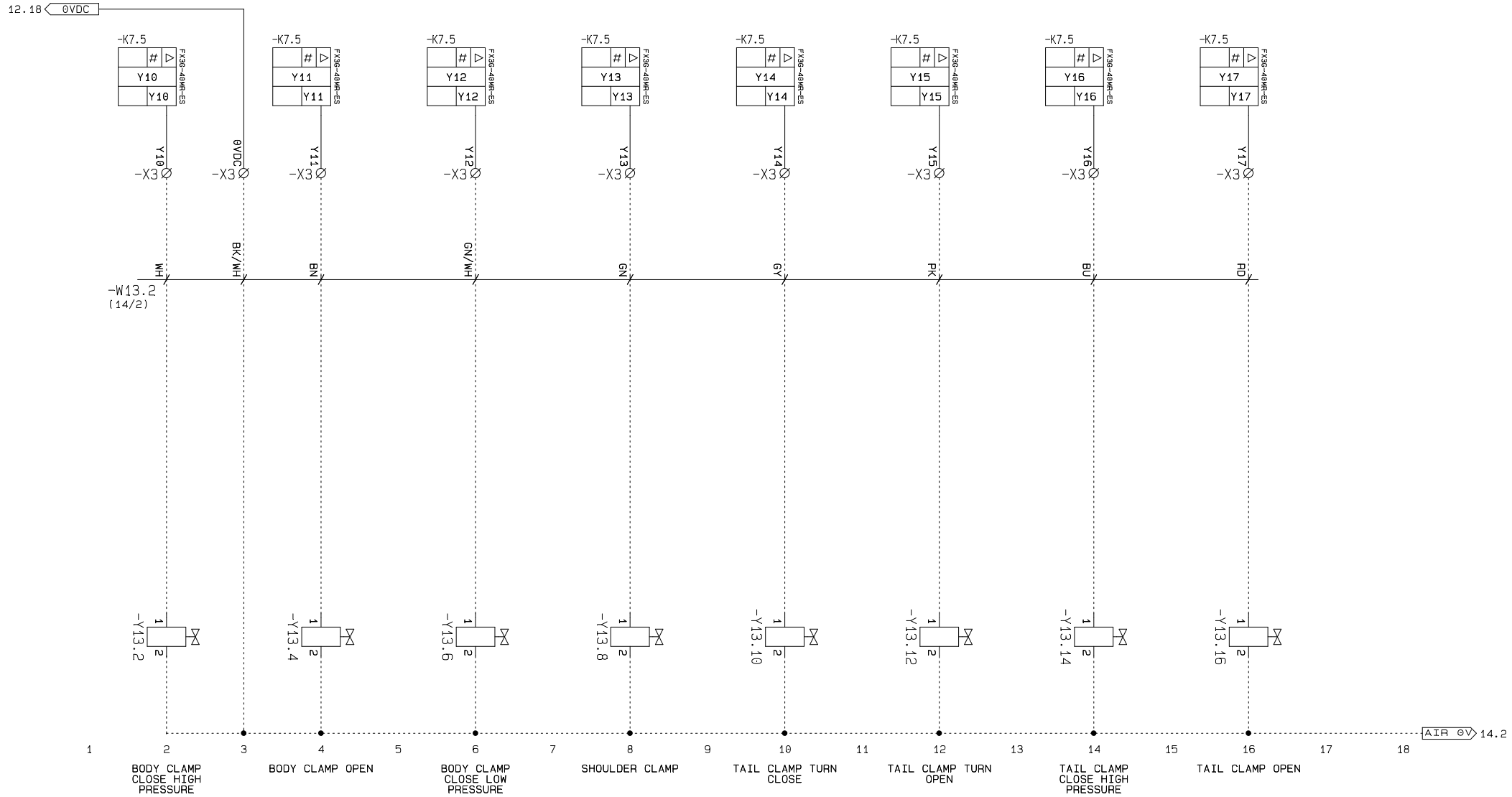
12.18 0VDC
-K7.5
FX3G-40MR-ES
Y10
Y11
Y12
Y13
Y14
Y15
Y16
Y17
-X3
0VDC
WH
BK/WH
BN
GN/WH
GN
GY
PK
BU
RD
-W13.2
(14/2)
-Y13.2
-Y13.4
-Y13.6
-Y13.8
-Y13.10
-Y13.12
-Y13.14
-Y13.16
AIR 0V 14.2
BODY CLAMP CLOSE HIGH PRESSURE
BODY CLAMP OPEN
BODY CLAMP CLOSE LOW PRESSURE
SHOULDER CLAMP
TAIL CLAMP TURN CLOSE
TAIL CLAMP TURN OPEN
TAIL CLAMP CLOSE HIGH PRESSURE
TAIL CLAMP OPEN

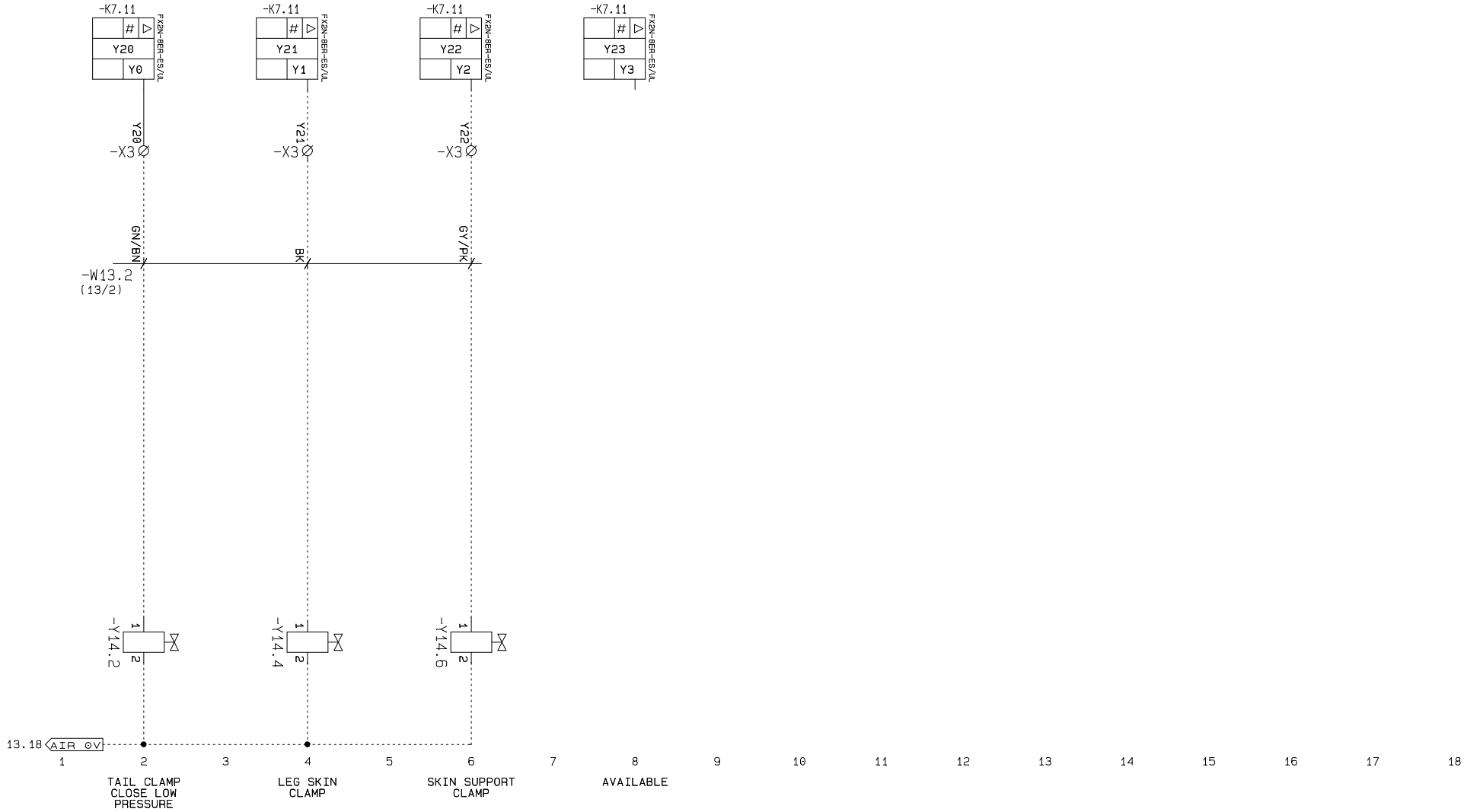
-K7.11
FX2N-8ER-ES/UL
Y20
Y0
Y21
Y1
Y22
Y2
Y23
Y3
-X3
GN/BN
BK
GY/PK
-W13.2
(13/2)
-Y14.2
-Y14.4
-Y14.6
13.18
AIR OV
1
2
3
4
5
6
7
8
9
10
11
12
13
14
15
16
17
18
TAIL CLAMP CLOSE LOW PRESSURE
LEG SKIN CLAMP
SKIN SUPPORT CLAMP
AVAILABLE

Name	I/O	Description	Component
-K7.5:X0	X0	EMERGENCY STOP OK	-SP4.8:X1
-K7.5:X1	X1	INVERTER ERROR	-U2.11:A
-K7.5:X2	X2	BODY PULL START POS.	-B8.6:BK
-K7.5:X3	X3	BODY PULL MAX	-B8.8:BK
-K7.5:X4	X4	SKIN PULL LOW SPEED	-B8.10:BK
-K7.5:X5	X5	SKIN PULL START POS.	-B8.12:BK
-K7.5:X6	X6	SKIN PULL MAX	-B8.14:BK
-K7.5:X7	X7	SHOULDER CLAMP OPEN	-B8.16:BK
-K7.5:X10	X10	TAIL CLAMP TURN POS.	-B9.2:BK
-K7.5:X11	X11	BUTTON RESET CYCLE	-S9.5:14
-K7.5:X12	X12	BUTTON BODY CLAMP 1	-S9.7:14
-K7.5:X13	X13	BUTTON TAIL CLAMP	-S9.9:14
-K7.5:X14	X14	BUTTON BODY CLAMP 2	-S9.11:14
-K7.5:X15	X15	BUTTON REVERSE	-S9.13:14
-K7.5:X16	X16	PEDAL FULL FORWARD BODY	-S10.2:2
-K7.5:X17	X17	PEDAL FULL SKIN FORWARD	-S10.4:2
-K7.5:X20	X20	PEDAL BODY CLAMP	-S10.6:2
-K7.5:X21	X21	SKIN PULL SLOW SKINCLAMP TURN	-B10.8:BK
-K7.5:X22	X22	AVAILABLE	
-K7.5:X23	X23	AVAILABLE	
-K7.5:X24	X24	AVAILABLE	
-K7.5:X25	X25	AVAILABLE	
-K7.5:X26	X26	AVAILABLE	
-K7.5:X27	X27	AVAILABLE	
-K7.5:Y0	Y0	BODY FULL STF	-U2.2:STF
-K7.5:Y1	Y1	SKIN PULL STF	-U2.11:STF
-K7.5:Y2	Y2	BODY PULL SPEED 1	-U2.2:RH
-K7.5:Y3	Y3	SKIN PULL SPEED 1	-U2.11:RH
-K7.5:Y4	Y4	BODY FULL STR	-U2.2:STR
-K7.5:Y5	Y5	SKIN PULL STR	-U2.11:STR
-K7.5:Y6	Y6	BODY PULL SPEED 2	-U2.2:RM
-K7.5:Y7	Y7	SKIN PULL SPEED 2	-U2.11:RM
-K7.5:Y10	Y10	BODY CLAMP CLOSE HIGH PRESSURE	-Y13.2:1
-K7.5:Y11	Y11	BODY CLAMP OPEN	-Y13.4:1
-K7.5:Y12	Y12	BODY CLAMP CLOSE LOW PRESSURE	-Y13.6:1
-K7.5:Y13	Y13	SHOULDER CLAMP	-Y13.8:1
-K7.5:Y14	Y14	TAIL CLAMP TURN CLOSE	-Y13.10:1
-K7.5:Y15	Y15	TAIL CLAMP TURN OPEN	-Y13.12:1
-K7.5:Y16	Y16	TAIL CLAMP CLOSE HIGH PRESSURE	-Y13.14:1
-K7.5:Y17	Y17	TAIL CLAMP OPEN	-Y13.16:1
-K7.11:X0	X30	AVAILABLE	
-K7.11:X1	X31	AVAILABLE	
-K7.11:X2	X32	AVAILABLE	
-K7.11:X3	X33	AVAILABLE	

Name	I/O	Description	Component
-K7.11:Y0	Y20	TAIL CLAMP CLOSE LOW PRESSURE	-Y14.2:1
-K7.11:Y1	Y21	LEG SKIN CLAMP	-Y14.4:1
-K7.11:Y2	Y22	SKIN SUPPORT CLAMP	-Y14.6:1
-K7.11:Y3	Y23	AVAILABLE	

VS-Automatic A/S

FROM		CABLE	TO	
Indication	Page/path	Indication	Indication	Page/path
-S1.2:2	1/1	-W1.1:1	-X3:L1	1/1
-S1.2:4	1/2	-W1.1:2	-X3:L2	1/2
-S1.2:6	1/2	-W1.1:3	-X3:L3	1/2
-S1.2:N	1/2	-W1.1:4	-X3:N	1/2
-Z2.2:PE	2/3	-W1.1:PE	-X3:PE	1/2
-U2.2:U	2/2	-W2.2:1	-M2.2:U1	2/2
-U2.2:V	2/2	-W2.2:2	-M2.2:V1	2/2
-U2.2:W	2/2	-W2.2:3	-M2.2:W1	2/2
-U2.2:PE	2/3	-W2.2:S	-M2.2: ⏚	2/3
-U2.2:PE	2/3	-W2.2: ⏚	-M2.2: ⏚	2/3
-M2.2:GN	2/4	-W2.3:1	-X2:L4.2	2/4
		-W2.3:2	-M2.2:WH	2/5
-U2.11:V	2/11	-W2.11:1	-M2.11:U1	2/11
-U2.11:U	2/11	-W2.11:2	-M2.11:V1	2/11
-U2.11:W	2/11	-W2.11:3	-M2.11:W1	2/11
-U2.11:PE	2/12	-W2.11:S	-M2.11: ⏚	2/12
-U2.11:PE	2/12	-W2.11: ⏚	-M2.11: ⏚	2/12
		-W2.12:1	-M2.11:GN	2/13
		-W2.12:2	-M2.11:WH	2/14
-X1:1U2	2/17	-W2.17:1	-M2.17:U1	2/17
-X1:1V2	2/17	-W2.17:2	-M2.17:V1	2/17
-X1:1W2	2/18	-W2.17:3	-M2.17:W1	2/18
-X1:PE	2/18	-W2.17:PE	-M2.17: ⏚	2/18
-X2:18	3/15	-W3.15:1	-Y3.15:1	3/15
-X2:19	3/15	-W3.15:2	-Y3.15:2	3/15
-X2:1	5/3	-W4.8:1	-S5.2:21	5/3
-X2:2	5/3	-W4.8:2	-S5.2:21	5/3
-X2:3	5/3	-W4.8:3	-S5.2:22	5/3
-X2:4	5/3	-W4.8:4	-S5.2:22	5/3
-X2:5	4/8	-W4.8:5	-SP4.8:13	4/8
-X2:6	4/8	-W4.8:6	-SP4.8:14	4/8
-X2:7	4/12	-W4.8:7	-SP4.8:X1	4/12
-X2:8	9/5	-W4.8:8	-S9.5:14	9/5
-X2:9	9/7	-W4.8:9	-S9.7:14	9/7
-X2:10	4/12	-W4.8:10	-SP4.8:X2	4/12
-X2:20	5/8	-W5.7:1	-S5.7:12	5/8

FROM		CABLE	TO	
Indication	Page/path	Indication	Indication	Page/path
-X2:21	5/8	-W5.7:2	-S5.7:11	5/8
-X2:22	5/8	-W5.7:3	-S5.7:22	5/8
-X2:23	5/8	-W5.7:4	-S5.7:21	5/8
-X2:24	5/13	-W5.12:1	-S5.12:11	5/13
-X2:25	5/13	-W5.12:2	-S5.12:12	5/13
-X2:26	5/13	-W5.12:3	-S5.12:21	5/13
-X2:27	5/13	-W5.12:4	-S5.12:22	5/13
-X2:11	9/8	-W6.15:1	-S9.13:13	9/13
-X2:12	9/9	-W6.15:2	-S9.9:14	9/9
-X2:13	9/11	-W6.15:3	-S9.11:14	9/11
-X2:14	9/13	-W6.15:4	-S9.13:14	9/13
-X2:15	6/16	-W6.15:5	-R6.16:3	6/16
-X2:16	6/16	-W6.15:6	-R6.16:2	6/16
-X2:17	6/16	-W6.15:7	-R6.16:1	6/16
-X3:X2	8/7	-W8.6:BK	-B8.6:BK	8/7
-X3:24VDC	8/6	-W8.6:BN	-B8.6:BN	8/6
-X3:0VDC	8/7	-W8.6:BU	-B8.6:BU	8/7
-X3:X3	8/9	-W8.8:BK	-B8.8:BK	8/9
-X3:24VDC	8/8	-W8.8:BN	-B8.8:BN	8/8
-X3:0VDC	8/9	-W8.8:BU	-B8.8:BU	8/9
-X3:X4	8/11	-W8.10:BK	-B8.10:BK	8/11
-X3:24VDC	8/10	-W8.10:BN	-B8.10:BN	8/10
-X3:0VDC	8/11	-W8.10:BU	-B8.10:BU	8/11
-X3:X5	8/13	-W8.12:BK	-B8.12:BK	8/13
-X3:24VDC	8/12	-W8.12:BN	-B8.12:BN	8/12
-X3:0VDC	8/13	-W8.12:BU	-B8.12:BU	8/13
-X3:X6	8/15	-W8.14:BK	-B8.14:BK	8/15
-X3:24VDC	8/14	-W8.14:BN	-B8.14:BN	8/14
-X3:0VDC	8/15	-W8.14:BU	-B8.14:BU	8/15
-X3:X7	8/17	-W8.16:BK	-B8.16:BK	8/17
-X3:24VDC	8/16	-W8.16:BN	-B8.16:BN	8/16
-X3:0VDC	8/17	-W8.16:BU	-B8.16:BU	8/17
-X3:X10	9/3	-W9.2:BK	-B9.2:BK	9/3
-X3:24VDC	9/2	-W9.2:BN	-B9.2:BN	9/2
-X3:0VDC	9/3	-W9.2:BU	-B9.2:BU	9/3

VS-Automatic A/S

FROM		CABLE	TO	
Indication	Page/path	Indication	Indication	Page/path
-S10.2:1	10/3	-W10.2:1	-X3:24VDC	10/2
-S10.2:2	10/3	-W10.2:2	-X3:X16	10/3
-S10.4:1	10/5	-W10.4:1	-X3:24VDC	10/4
-S10.4:2	10/5	-W10.4:2	-X3:X17	10/5
-S10.6:1	10/7	-W10.6:1	-X3:24VDC	10/6
-S10.6:2	10/7	-W10.6:2	-X3:X20	10/7
-X3:X21	10/9	-W10.8:BK	-B10.8:BK	10/9
-X3:24VDC	10/8	-W10.8:BN	-B10.8:BN	10/8
-X3:0VDC	10/9	-W10.8:BU	-B10.8:BU	10/9
-X3:Y21	14/4	-W13.2:BK	-Y14.4:1	14/4
-X3:0VDC	13/3	-W13.2:BK/WH	-Y13.8:2	13/8
-X3:Y11	13/4	-W13.2:BN	-Y13.4:1	13/4
-X3:Y16	13/14	-W13.2:BU	-Y13.14:1	13/14
-X3:Y13	13/8	-W13.2:GN	-Y13.8:1	13/8
-X3:Y20	14/2	-W13.2:GN/BN	-Y14.2:1	14/2
-X3:Y12	13/6	-W13.2:GN/WH	-Y13.6:1	13/6
-X3:Y14	13/10	-W13.2:GY	-Y13.10:1	13/10
-X3:Y22	14/6	-W13.2:GY/PK	-Y14.6:1	14/6
-X3:Y15	13/12	-W13.2:PK	-Y13.12:1	13/12
-X3:Y17	13/16	-W13.2:RD	-Y13.16:1	13/16
-X3:Y10	13/2	-W13.2:WH	-Y13.2:1	13/2

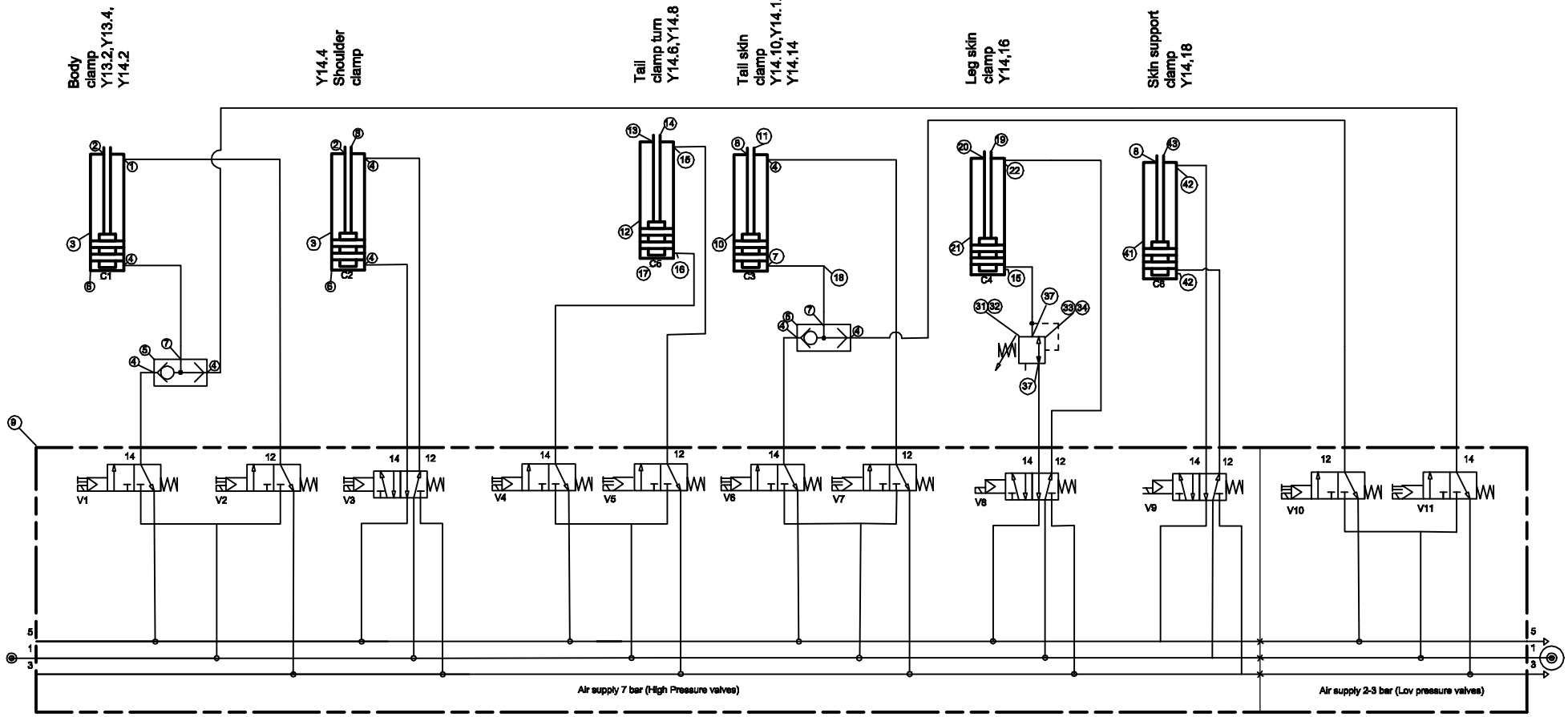

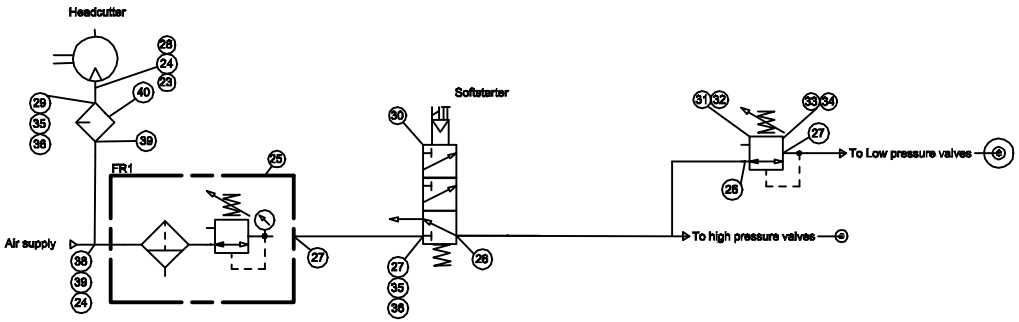

Alle kanter relfes
Breake all edges

A	Made	12-08-2014	MRH
REV	DESCRIPTION	DATE	APPROVED
REVISION HISTORY			

This drawing is the property of HEDENSTED GRUPPEN A/S and must not be copied or disclosed to any other person.

Scale:	Ikke angivet tolerancer fht./ Not specified tolerance according to: DS/ISO 2768-m	Sheet size: A3
	Overfl. beskaffenhed/Surface properties: No	Sheet: 1 /1
Part No.: 206330_01	Material:	
Description: HG quick skin air system 2014_01		
Description: Sheet 1 of 1		