Spare Parts

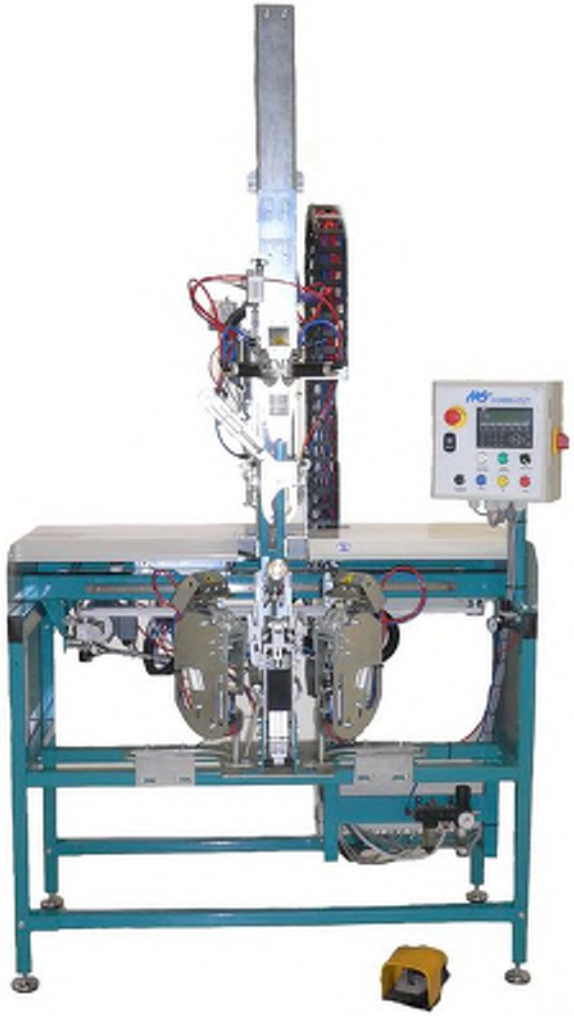

HG COMBI CUT

Slicing machine

12 July 2018

Model 2005-2009

1. Table of contents.

1. Table for contents
2. Spare parts
3. Air diagram

Parts List			
ITEM	QTY	PART NUMBER	DESCRIPTION
1	4	10205020	Bolt unbrako cyl 5x20 FZB
2	4	10205025	Bolt unbrako cyl 5x25 FZB
3	2	10206010	Bolt unbrako cyl 6x10 FZB
4	3	10206020	Bolt unbraco cyl 6x20 FZB
5	1	20208020	Fitting bolt M8-10x20mm
6	1	210427	Lock nut MP150189_M10x1,25
7	1	211616	Cylinder RT 57225/M/50
8	1	214116	UF-Joint QM-8025-32
9	1	214140	L-Joint QM-57025-24
10	2	214185	Clamp for reed contact Ø25
11	2	214310	Reed contact M/50/EAP/5V
12	2	215110	Banjo flow control Ø6 1/8"
13	1	30317	Frame for spade lift
14	1	30318	Assembly leghook and tailroll system
15	1	30426	Assembly tailroll system
16	8	82105900	Washer M5 FZB

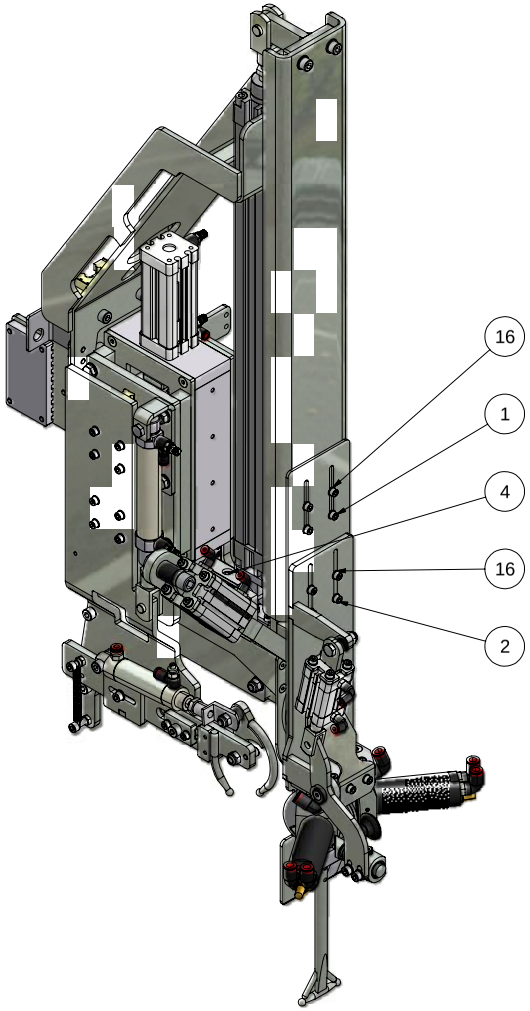

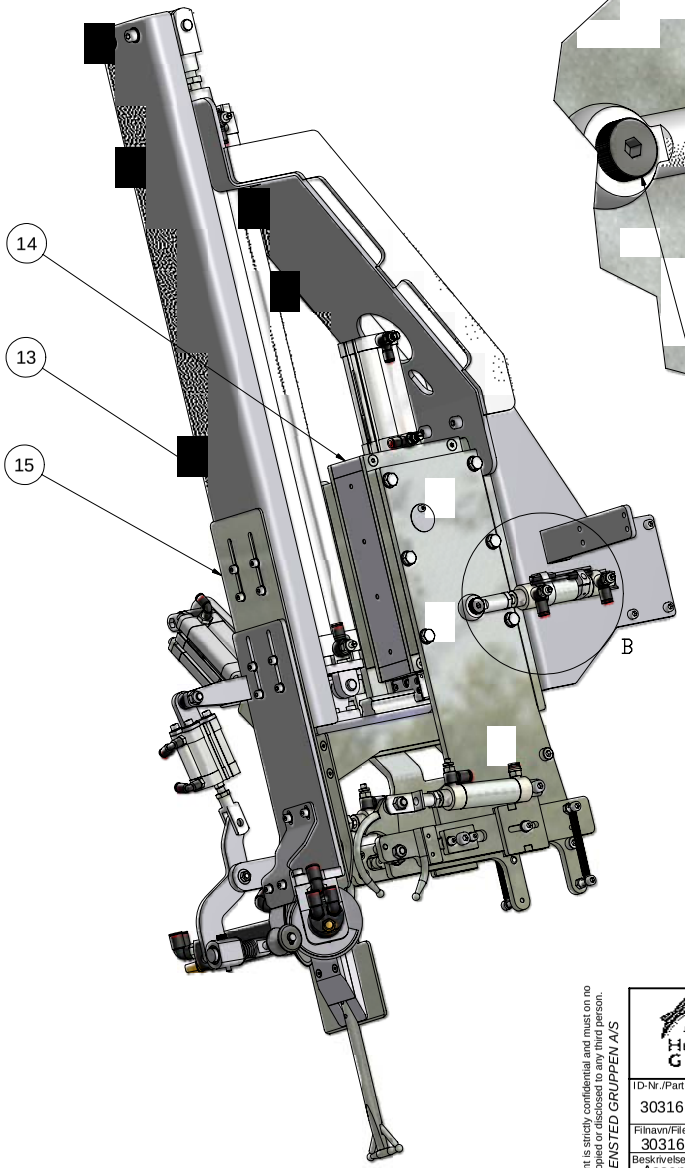

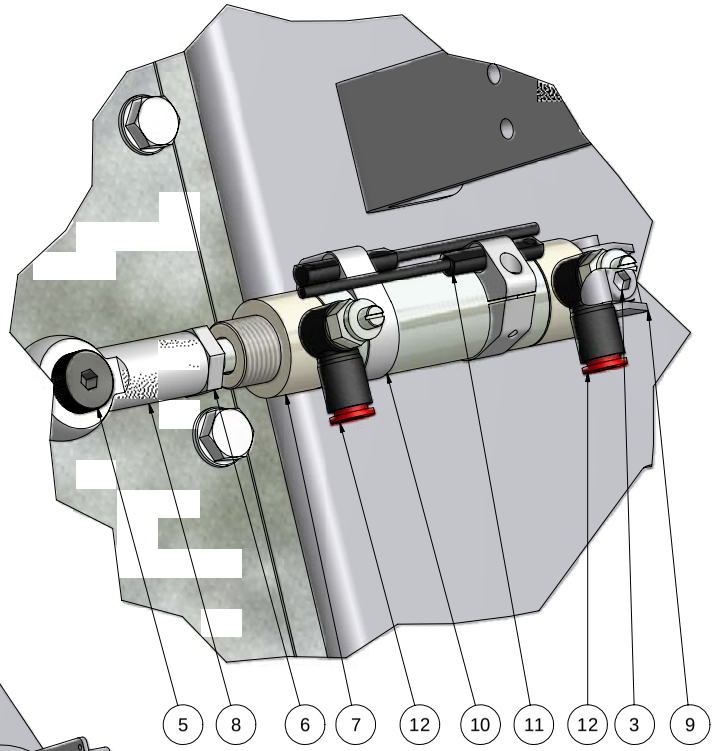

This document is strictly confidential and must on no account be copied or disclosed to any third person.
HEDENSTED GRUPPEN A/S

Hedensted Gruppen	Skala/Scale: 1:2	Materiale/ Material:	Vægt/Weight: kg
		Overfl. beskaffenhed/ Surface properties:	Konst./Designed: KL
ID-Nr./Part No.: 30316	Udfoldet iht./ Unfolding according to:	Ikke angivet tolerancer iht./ Not specificed tolerance according to: DS/ISO 2768-m	Tegnet/Drafted: Thomas Vittrup
Filnavn/Filename: 30316 Assembly tower.iam			Dato/Date: 12-05-2004
Beskrivelse: Assembly tower			
Description: Combi cut			
Sidst gemt af/Last saved by: TV	Sidst gemt/Last saved: 16-05-2004	Papirstørrelse/Sheet size: A2	sheet 1 of 1

(1 : 4)

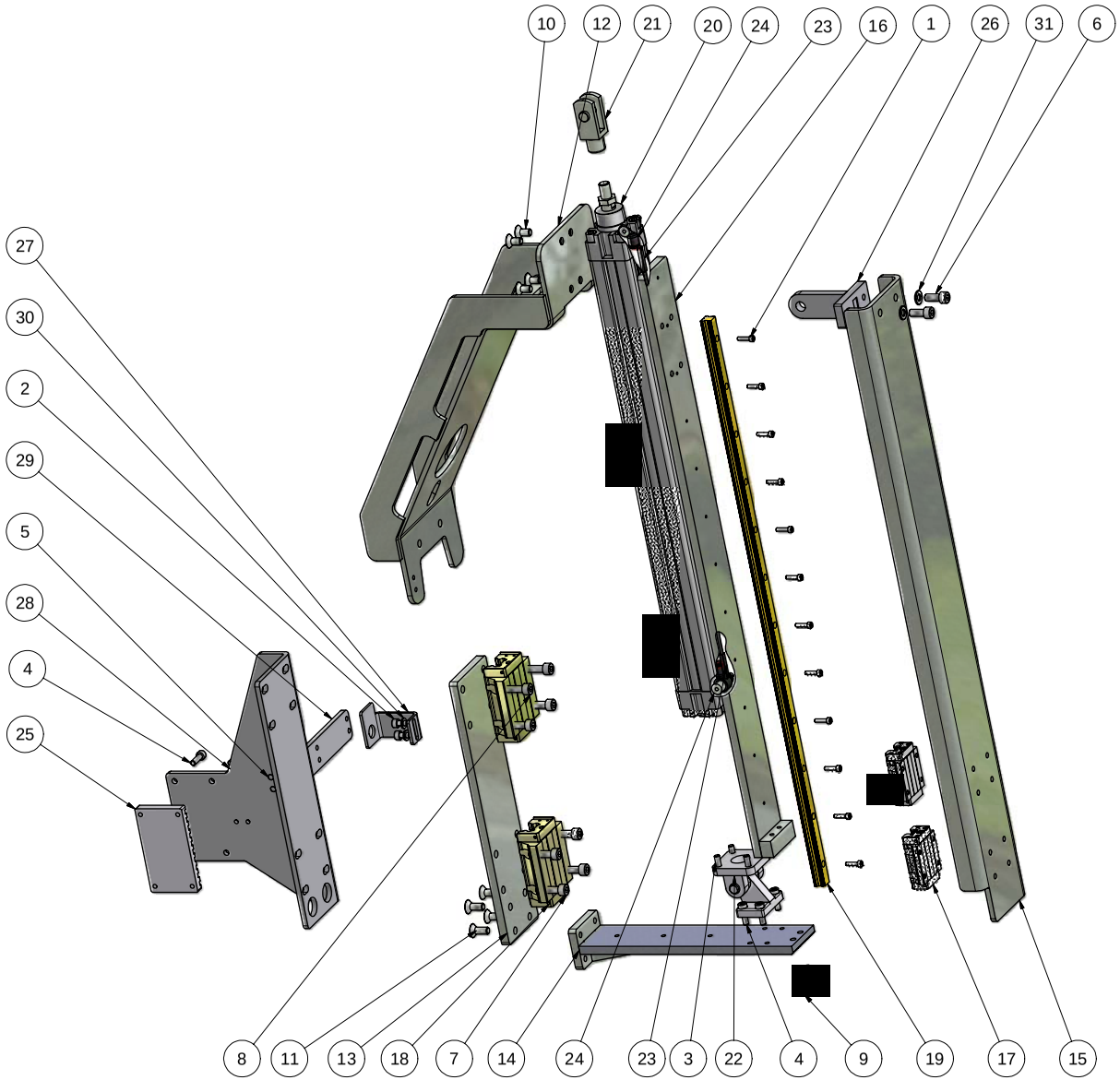

Parts List			
ITEM	QTY	PART NUMBER	DESCRIPTION
1	12	10204016	Bolt.unbraco cyl 4x16 FZB
2	2	10206012	Bolt unbrako cyl 6x12 FZB
3	4	10206016	Bolt. unbraco cyl 6x16 FZB
4	8	10206020	Bolt unbraco cyl 6x20 FZB
5	2	10208012	Bolt.unbraco cyl 8x12 FZB
6	2	10208020	Bolt.unbraco cyl 8x20 FZB
7	6	10208030	Bolt Unbrako cyl. 8x30 FZB
8	2	10208035	Bolt Unbrako cyl 8x35 FZB
9	2	20406025	Hexagon countersunk head 6x25 FZB
10	4	20408016	Hexagon countersunk head 8x16 FZB
11	4	20408020	Hexagon countersunk head 8x20 FZB
12	1	207880	Reinforcement for tower model ES
13	1	207885	Console for tower model 2008
14	1	207887	Horisontial console for tower_M2008
15	1	207890	Connectionplate-spade cylinder_ES
16	1	207895	Horisontial console model ES
17	2	207906	Ball runner block / SHS15CSS
18	2	207912	Ball runner block / SHS25CSS
19	1	207917	Ball guide rail / SHS15+710mm
20	1	212129	Cylinder PRA/182040/M/500
21	1	214120	F-Joint QM-8040-25
22	1	214160	L-Joint QA-8040-24
23	2	214310	Reed contact M/50/EAP/5V
24	2	215992	Banjo flow control Ø6 1/4"
25	1	30268	Clamping plate for AT10
26	1	30291	Bracket assembly for tower lift
27	1	30560	Sensorbracket for tower
28	1	30700	Connection plate for belt
29	1	30820	Bracket for energi chain
30	2	82106000	Washer M6 FZB
31	2	82108000	Washer M8 FZB

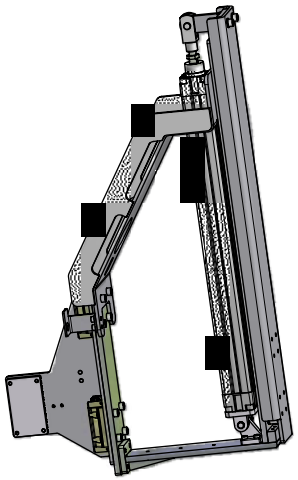

Break all edges
Alle kanter reifes

REVISION HISTORY			
REV	DESCRIPTION	DATE	APPROVED
A	New drawing	05-05-2006	KL
B	Parts changed for model ES	13-12-2007	KL
C	Name changed	21-05-2010	KL

This document is strictly confidential and must not be accessed by a third party or disclosed to any third parties.
HEDENSTED GRUPPEN A/S

[redacted]

Scale: 1:4

Ikke angivet tolerancer iht./ Not specified tolerance according to: DS/ISO 2768-m

Konst./Designed:

Overfl. beskaffenhed/Surface properties:

Tegnet/Drafted: kl

Part No.: 30317

Udtidet iht./ Unfolding according to:

Material:

Date: 05-12-2005

Beskrivelse: Frame for spade lift

Description: Combi og Quick cut

Sidst gemt af/Last saved by: KL

Sidst gemt/Last saved: 21-12-2005

Sheet size: A2

Sheet 1 / 1

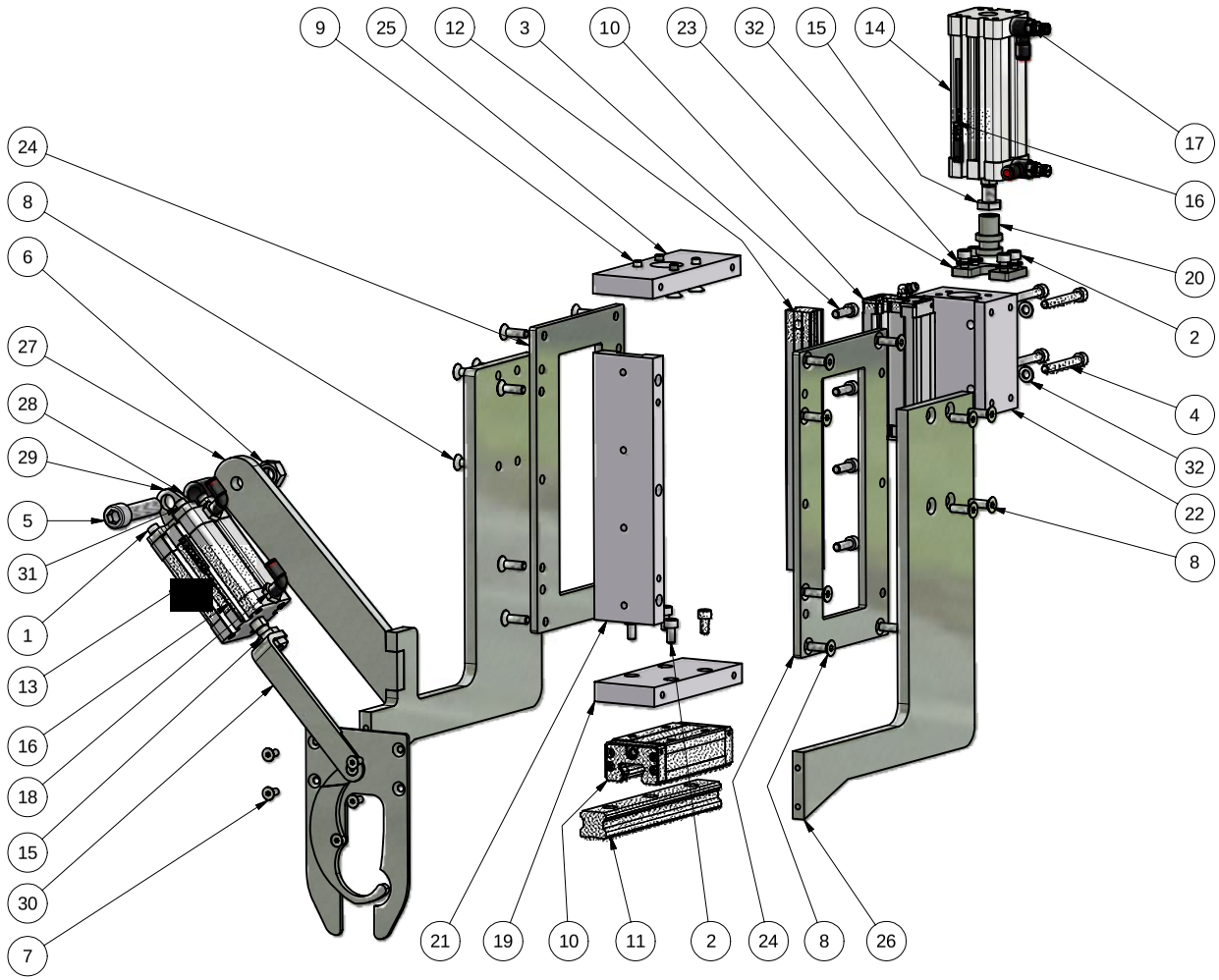

Parts List			
ITEM	QTY	PART NUMBER	DESCRIPTION
1	4	10205016	Bolt unbrako cyl 5x16 FZB
2	8	10206012	Bolt unbrako cyl 6x12 FZB
3	4	10206020	Bolt unbraco cyl 6x20 FZB
4	4	10206050	Bolt unbrako cyl 6x50 FZB
5	1	10212050	Bolt.unbraco cyl 12x50 FZB
6	1	1512000	Nut M12 FZB
7	4	20405012	Hexagon countersunk head 5x12 FZB
8	20	20406020	Hexagon countersunk head 6x20 FZB
9	4	20406025	Hexagon countersunk head 6x25 FZB
10	2	207911	Ball runner block / SHS25V
11	1	207913	Ball guide rail / SHS25+170mm
12	1	207915	Ball guide rail / SHS25+200mm
13	1	210305	Cylinder RM/192032/M/50
14	1	210340	Cylinder RA/192032/M/80
15	3	210427	Lock nut MP150189_M10x1,25
16	2	214310	Reed contact M/50/EAP/5V
17	2	215105	Banjo flow control Ø6 1/8"
18	2	215755	Swirwel elbow Ø4 1/8"
19	1	30500	Connecting piece - tower
20	1	30504	Bush for cylinder
21	1	30505	Plate for vertical rail - tower
22	1	30510	Connecting piece-vertical rail
23	1	30512	Plate for connetion piece
24	2	30525	Bearing plate for vertical rail
25	1	30535	Top for tower
26	1	30615	Right plate for back spade
27	1	30620	Assembly - plate for back spade
28	1	30625	Spacer for tail hook cyl.
29	1	30641	Assembly bracket for ø32cylinder
30	1	30698	Tail spade system C.Cut tail spade and hook
31	4	82105900	Washer M5 FZB
32	8	82106000	Washer M6 FZB

Break all edges
Alle kanter reifes

REVISION HISTORY			
REV	DESCRIPTION	DATE	APPROVED
A	New drawing	01-03-2007	KL

This document is strictly confidential and must on no account be copied or disclosed to any third person.
HEDENSTED GRUPPEN A/S

Hedensted Gruppen

Scale: 1:4	Ikke angivet tolerancer ihf./ Not specified tolerance according to: DS/ISO 2768-m		Konst./Designed: KL
	Overfl. beskaffenhed/Surface properties:		Tegnet/Drafted: KL
Part No.: 207849	Udfoldet ihf./ Unfolding according to:	Material:	Date: 12-05-2004
Beskrivelse: Tailspadesystem			
Description: Combi cut			
Sidst gemt af/Last saved by: KL	Sidst gemt/Last saved: 01-03-2007	Sheet size: A3	Sheet 1 / 1

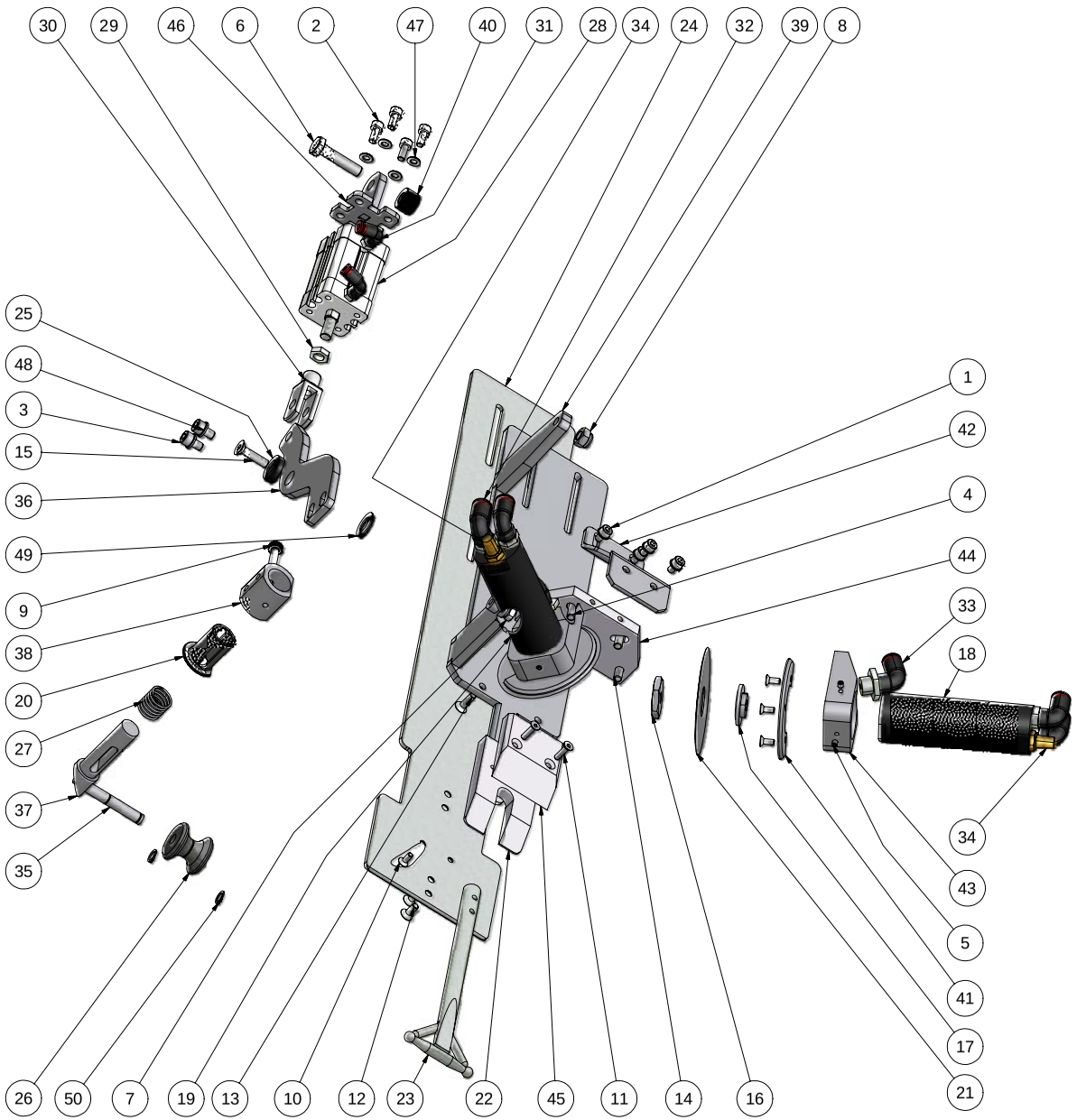

Parts List

ITEM	QTY	PART NUMBER	DESCRIPTION
1	4	10205008	Bolt.unbraco cyl.5x8 FZB
2	4	10205012	Bolt unbrako cyl 5x12 FZB
3	2	10206010	Bolt unbrako cyl 6x10 FZB
4	2	10206020	Bolt unbraco cyl 6x20 FZB
5	4	10504005	Stop screw 4x5 black
6	1	11408035	Hexagon bolt m8x35 FZB
7	1	1506000	Nut M6 FZB
8	1	17908000	Self-locking nut M8 FZB
9	1	20205025	Fitting bolt M5-6x25mm
10	8	20404010	Hexagon countersunk head 4x10 FZB
11	2	20404016	Hexagon countersunk head 4x16 FZB
12	4	20405012	Hexagon countersunk head 5x12 FZB
13	2	20405016	Hexagon countersunk head 5x16 FZB
14	2	20406020	Hexagon countersunk head 6x20 FZB
15	1	20406025	Hexagon countersunk head 6x25 FZB
16	2	206070	Lock for knives Ø70-Ø80
17	2	206071	Hub for knives Ø70-80
18	1	206084	Air motor LZB 22A049-55
19	1	206091	Air motor LZB 22A049 Links
20	1	207820	Bushing for tailroll
21	2	207828	Knife f. slicing machine 80 mm
22	1	207832	Wedge for belly loosener 2007
23	1	207834	Belly loosener - long
24	1	207838	Plate for belly loosener 2007
25	1	207855	Bush for tailroll - endpiece
26	1	207860	Tail roll combi cut
27	1	207931	Compression spring 1.8-16-20
28	1	210310	Cylinder RA/192025/M/25
29	1	210421	Lock nut M/P1501/60
30	1	211100	F-Joint QM-8020-25
31	2	215750	Swirvel elbow Ø4 M5
32	4	216536	Swirvel elbow Ø8 1/8"
33	2	216537	Swirvel elbow Ø8 1/4"
34	2	216796	Silencer 1/8" T40C-1800
35	1	30330	shaft for tail roll
36	1	30340	Arm for swing - tailroll
37	1	30345	Shaft for tailroll adjustment
38	1	30425	Consol for tailroll
39	1	30436	Plate ammenbly - tailroll system
40	1	30437	Distance bush f.cyl RM192000
41	2	30511	Screen for 80mm knife
42	1	30515	Coverplate for knifes
43	2	30516	Bracket for air motor
44	1	30518	Baseplate for air motor
45	1	30520	Wedge for female
46	1	30647	Mounting bracket for ø25 cyl.
47	8	82105900	Washer M5 FZB
48	4	82106000	Washer M6 FZB
49	1	88712100	Shim washer ø12x18x1,0
50	2	89708000	Seeger ring for shaft Ø8 din 471

REVISION HISTORY

REV	DESCRIPTION	DATE	APPROVED
A	Belly loosner changed	15-04-2005	KL
B	Name changed	21-05-2010	KL

This document is strictly confidential and must on no account be copied or disclosed to any third person.
HEDENSTED GRUPPEN A/S

Hedensted Gruppen

Skala/Scale: 1:2

Materiale/ Material:

Overfl. beskaffenhed/ Surface properties:

Vægt/Weight: kg

Konst./Designed:

ID-Nr./Part No.: 30426

Udfoldet iht./ Unfolding according to:

Ikke angivet tolerancer iht./ Not specificed tolerance according to: DS/ISO 2768-m

Tegnet/Drafted: *Thomas Vittrup*

Filnavn/Filename: 30426 Assembly tailroll system.iam

Dato/Date: 13-05-2004

Beskrivelse: Assembly tailroll system

Description: Combi / Quick cut

Sidst gemt af/Last saved by: **TV**

Sidst gemt/Last saved: **16-05-2004**

Papirstørrelse/Sheet size: A2

sheet 1 of 2

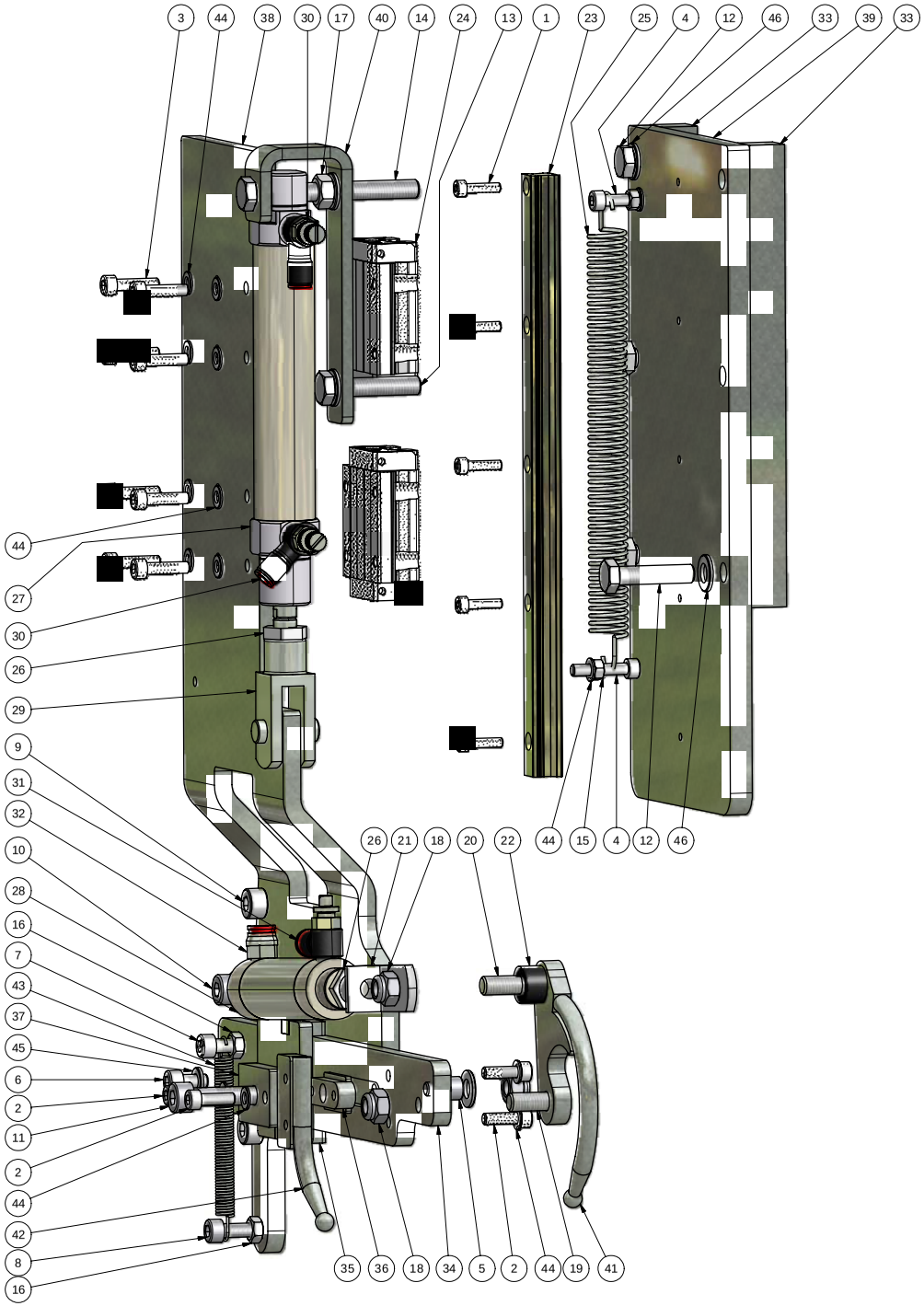

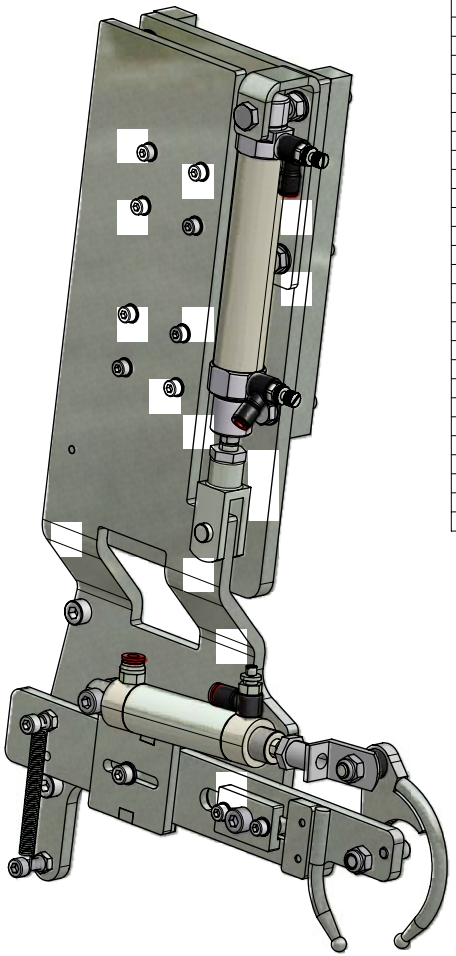

Parts List			
ITEM	QTY	PART NUMBER	DESCRIPTION
1	5	10204016	Bolt.unbraco cyl 4x16 FZB
2	4	10205016	Bolt unbrako cyl 5x16 FZB
3	8	10205020	Bolt unbrako cyl 5x20 FZB
4	2	10205025	Bolt unbrako cyl 5x25 FZB
5	1	10206010	Bolt unbrako cyl 6x10 FZB
6	1	10206012	Bolt unbrako cyl 6x12 FZB
7	1	10206020	Bolt unbraco cyl 6x20 FZB
8	1	10206025	Bolt unbraco cyl 6x25 FZB
9	2	10208010	Bolt.unbraco cyl 8x10 FZB
10	1	10208025	Bolt Unbrako Cyl. 8x25 FZB
11	1	10208035	Bolt Unbrako cyl 8x35 FZB
12	4	11408035	Hexagon bolt m8x35 FZB
13	1	11408040	Hexagon bolt m8x40 FZB
14	1	11408075	Hexagon bolt m8x75 FZB
15	2	1505000	Nut M5 FZB
16	2	1506000	Nut M6 FZB
17	2	1508000	Nut M8 FZB
18	3	17908000	Self-locking nut M8 FZB
19	1	20408025	Hexagon countersunk head 8x25 FZB
20	1	20408035	Hexagon countersunk head 8x35 FZB
21	1	207856	Bracket for leghook
22	1	207870	Spacer for leghooks
23	1	207905	Ball guide rail / SHS15+260mm
24	2	207906	Ball runner block / SHS15CSS
25	1	207944	Extension spring 1,6-13,5x120
26	2	210427	Lock nut MP150189_M10x1,25
27	1	211038	Cylinder RM/8026/M/80
28	1	211616	Cylinder RT 57225/M/50
29	1	214115	F-Joint QM-8025-25
30	2	215105	Banjo flow control Ø6 1/8"
31	1	215110	Banjo flow control Ø6 1/8"
32	1	215900	Straight connector Ø6 1/8"
33	2	30240	Distance block for tower
34	1	30245	Arm for leg hooks left side
35	1	30252	Adjustable bracket left leg hooks
36	1	30255	T-bolt for arm leg hooks
37	1	30265	Block for T-bolt
38	1	30324	Left carrying plate leghook
39	1	30327	Support for carrying plate
40	1	30329	Bracket for cylinder
41	1	30657	Left back-hook - big moveable
42	1	30662	Shaft with ball for small hook
43	1	470580	Extension spring 1-9x60,5
44	14	82105900	Washer M5 FZB
45	1	82106000	Washer M6 FZB
46	7	82108000	Washer M8 FZB

Break all edges
Alle kanter reifes

REVISION HISTORY			
REV	DESCRIPTION	DATE	APPROVED
A	New drawing	17-05-2010	KL

This document is strictly confidential and must not be accessed by any third parties.
HEDENSTED GRUPPEN A/S

[redacted]

Scale: 1:3

Ikke angivet tolerancer iht./ Not specified tolerance according to: DS/ISO 2768-m

Overfl. beskaffenhed/Surface properties:

Konst./Designed: KL

Tegnet/Drafted: KL

Part No.: 207846

Udfolder iht./Unfolding according to:

Material:

Date: 12-05-2004

Beskrivelse: Left leghook system

Description: Combi cut

Sidst gemt af/Last saved by: KL

Sidst gemt/Last saved: 01-03-2007

Sheet size: A2

Sheet 1 / 1

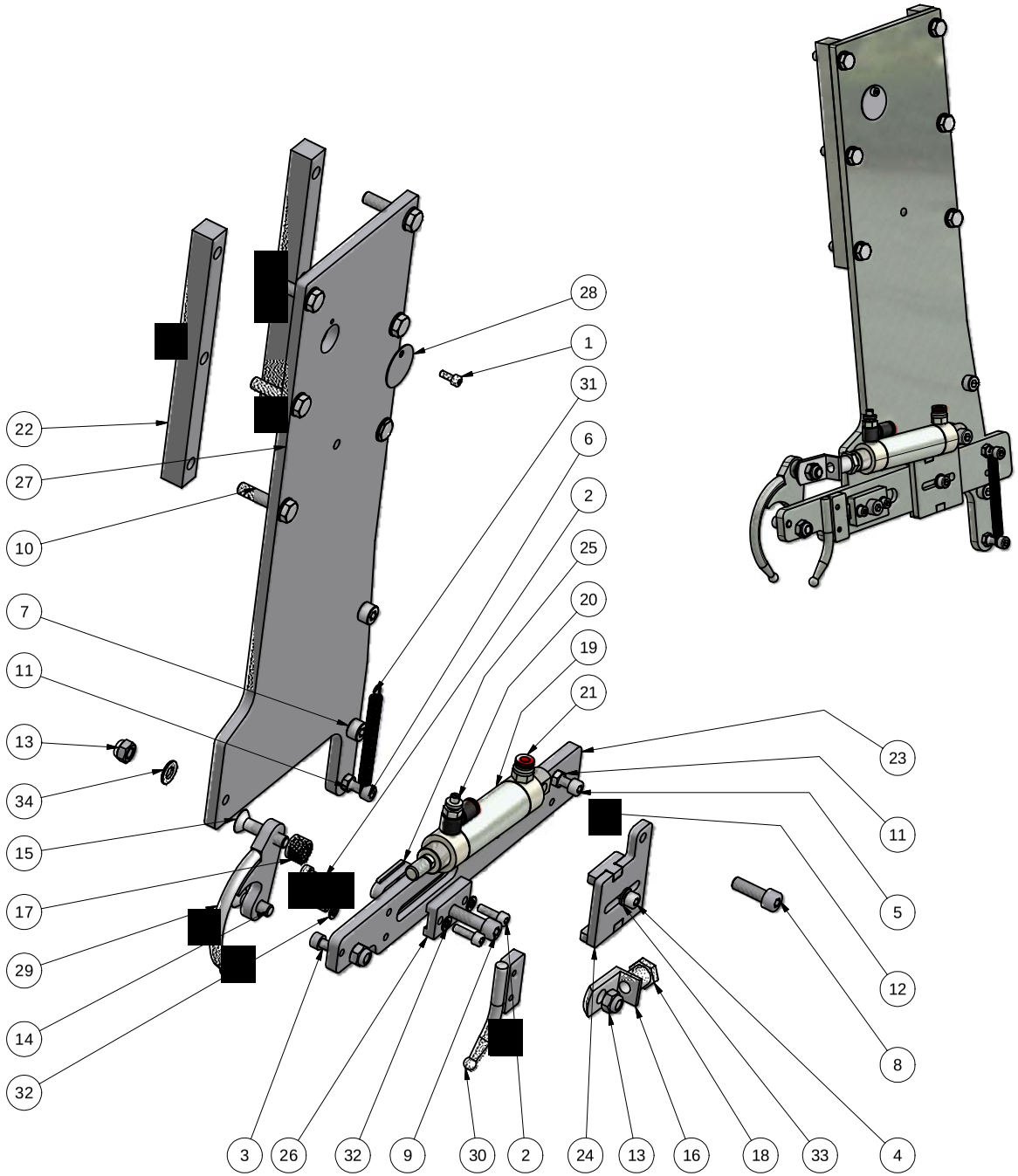

Parts List

ITEM	QTY	PART NUMBER	DESCRIPTION
1	1	10204010	Bolt.unbraco cyl 4x10 FZB
2	4	10205016	Bolt unbrako cyl 5x16 FZB
3	1	10206010	Bolt unbrako cyl 6x10 FZB
4	1	10206012	Bolt unbrako cyl 6x12 FZB
5	1	10206020	Bolt unbraco cyl 6x20 FZB
6	1	10206025	Bolt unbraco cyl 6x25 FZB
7	2	10208010	Bolt.unbraco cyl 8x10 FZB
8	1	10208025	Bolt Unbrako Cyl. 8x25 FZB
9	1	10208035	Bolt Unbrako cyl 8x35 FZB
10	6	11408035	Hexagon bolt m8x35 FZB
11	2	1506000	Nut M6 FZB
12	1	1508000	Nut M8 FZB
13	3	17908000	Self-locking nut M8 FZB
14	1	20408025	Hexagon countersunk head 8x25 FZB
15	1	20408035	Hexagon countersunk head 8x35 FZB
16	1	207856	Bracket for leghook
17	1	207870	Spacer for leghooks
18	1	210427	Lock nut MP150189_M10x1,25
19	1	211616	Cylinder RT 57225/M/50
20	1	215110	Banjo flow control Ø6 1/8"
21	1	215900	Straight connector Ø6 1/8"
22	2	30240	Distance block for tower
23	1	30246	Arm for leg hooks right side
24	1	30249	Adjustable bracket right leg hooks
25	1	30255	T-bolt for arm leg hooks
26	1	30265	Block for T-bolt
27	1	30325	Right carrying plate
28	1	30328	Coverplate f. lubricating nipple
29	1	30658	Right back hook - big moveable
30	1	30663	Right back-hook - small steady
31	1	470580	Extension spring 1-9x60,5
32	4	82105900	Washer M5 FZB
33	1	82106000	Washer M6 FZB
34	7	82108000	Washer M8 FZB

Break all edges

Alle kanter reifes

REVISION HISTORY

REV	DESCRIPTION	DATE	APPROVED
A	New drawing	20-05-2010	KL

This document is strictly confidential and must on no account be copied or disclosed to any third person.
HEDENSTED GRUPPEN A/S

Hedensted Gruppen

Scale: 1:4	Ikke angivet tolerancer ihf./ Not specified tolerance according to: DS/ISO 2768-m		Konst./Designed: KL
	Overfl. beskaffenhed/Surface properties:		Tegnet/Drafted: KL
Part No.: 207848	Udfoldet ihf./ Unfolding according to:	Material:	Date: 12-05-2004
Beskrivelse: Right leghook system			
Description: Combi cut			
Sidst gemt af/Last saved by: KL	Sidst gemt/Last saved: 01-03-2007	Sheet size: A3	Sheet 1 / 2

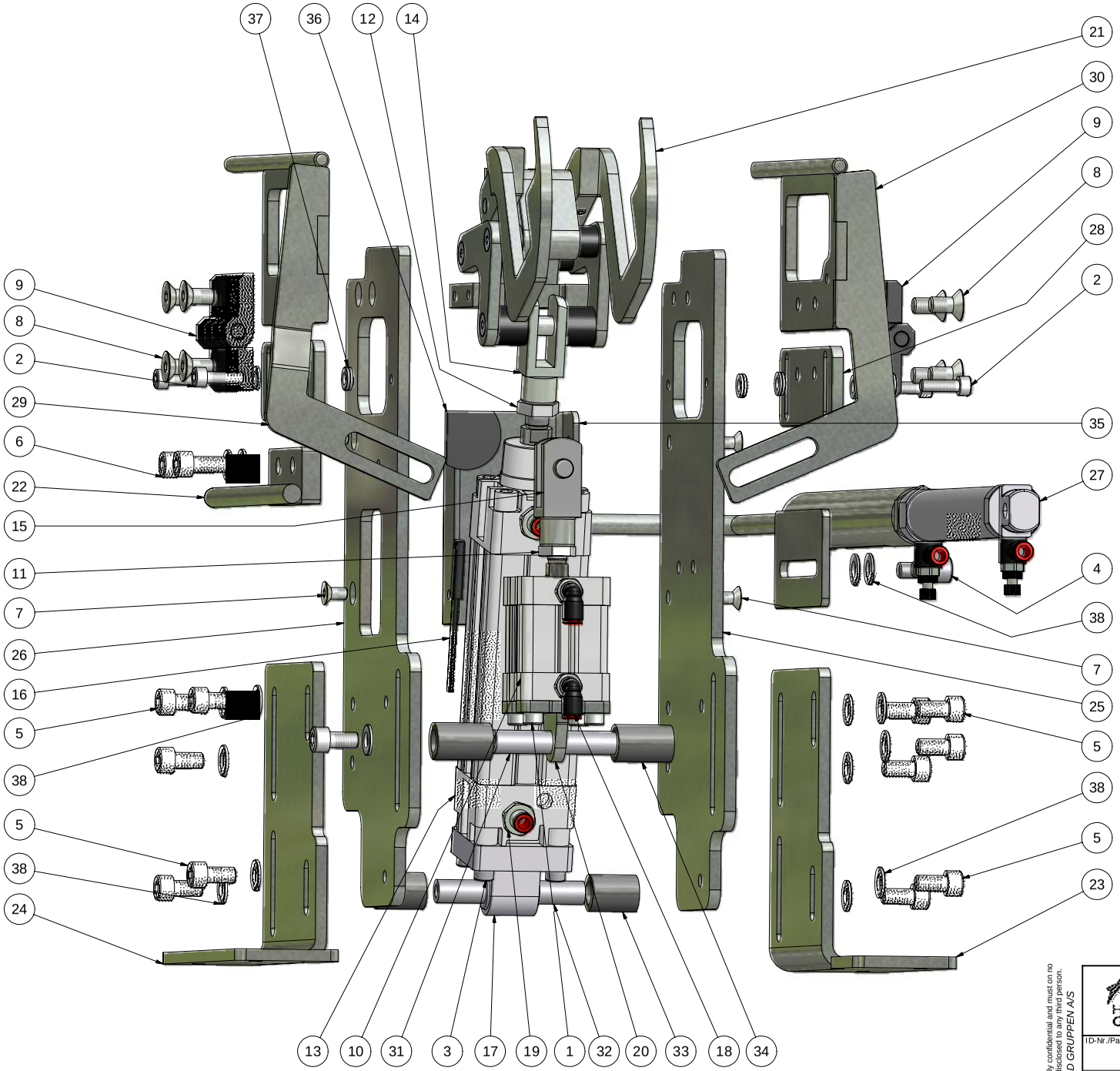

Parts List

ITEM	QTY	PART NUMBER	DESCRIPTION
1	4	10206016	Bolt. unbraco cyl 6x16 FZB
2	4	10206020	Bolt unbraco cyl 6x20 FZB
3	4	10206025	Bolt unbraco cyl 6x25 FZB
4	2	10208012	Bolt.unbraco cyl 8x12 FZB
5	12	10208016	Bolt.unbraco cyl 8x16 FZB
6	2	10208020	Bolt.unbraco cyl 8x20 FZB
7	4	20406012	Hexagon countersunk head 6x12 FZB
8	8	20408016	Hexagon countersunk head 8x16 FZB
9	2	207940	Hinge GN237-60-60
10	1	210330	Cylinder RA/192032/M/20
11	1	210427	Lock nut MP150189_M10x1,25
12	1	210428	Lock nut MP150190_M12x1,25
13	1	212123	Cylinder PRA/182040/M/80
14	1	214108	F-Joint QM-57040-25
15	1	214115	F-Joint QM-8025-25
16	1	214310	Reed contact M/50/EAP/5V
17	1	214905	R-Joint QA-8040-27
18	2	215760	Swirvel elbow Ø6mm 1/8"
19	2	215930	Straight connector Ø6 1/4"
20	1	30641	Assembly bracket for ø32cylinder
21	1	30667	Ass. unit excentric bodyholder
22	1	30702	Stop axle complete
23	1	30705	Body holder for outer plate
24	1	30706	Body holder for outer plate
25	1	30710	Body holder for inner plate
26	1	30711	Body holder for inner plate
27	1	30716	Assembly bodyholder
28	2	30740	Lower plate for tigh-support
29	1	30756	Assembly tigh-support right
30	1	30757	Assembly tigh-support left
31	1	30760	Axle for cylinder Ø32
32	1	30761	Axle for cylinder Ø40
33	2	30762	Spacer 19-12-24,8
34	2	30763	Spacer 19-12-29,7
35	1	30765	Plate for body holder rubber
36	1	30770	Rubber for body holder plate
37	12	82106000	Washer M6 FZB
38	16	82108000	Washer M8 FZB

REVISION HISTORY

REV	DESCRIPTIO	DATE	APPROVED
A	Made	17-05-2004	KL
B	Renamed	05-05-2010	KC

This document is strictly confidential and must on no account be copied or disclosed to any third person.
HEDENSTED GRUPPEN A/S

Hedensted Gruppen

Skala/Scale: 1:2

Materiale/ Material:

Overfl. beskaffenhed/ Surface properties:

Vægt/Weight: kg

Konst./Designed:

ID-Nr./Part No.:

Udfoldet iht./ Unfolding according to:

Ikke angivet tolerancer iht./ Not specificed tolerance according to: DS/ISO 2768-m

Tegnet/Drafted: *Thomas Vittrup*

Filnavn/Filename: 30726 Assembly complete body holder.iam

Dato/Date: 14-05-2004

Beskrivelse: Assembly complete body holder

Description:

Sidst gemt af/Last saved by: **TV**

Sidst gemt/Last saved: **17-05-2004**

Papirstørrelse/Sheet size: A2

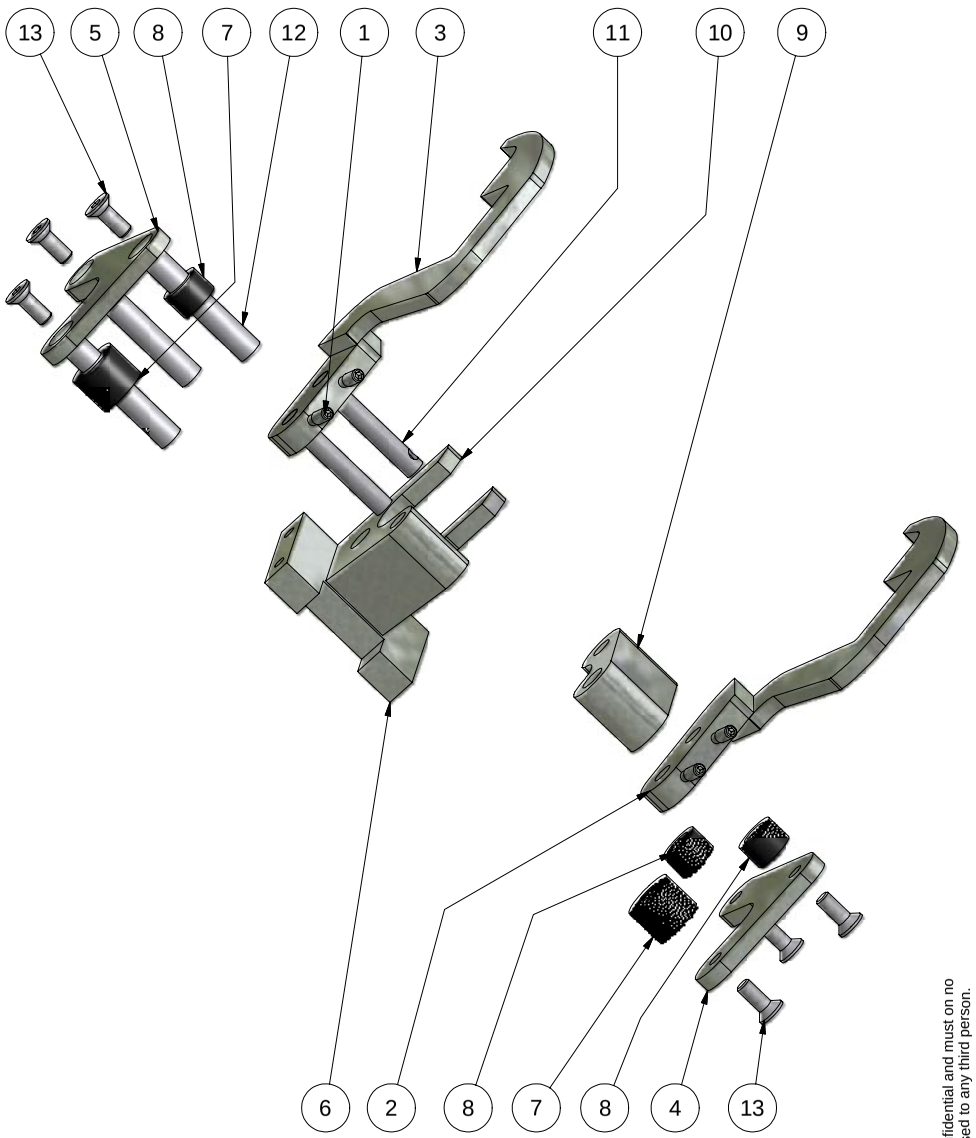

Parts List			
ITEM	QTY	PART NUMBER	DESCRIPTION
1	4	20905010	Stop screw M5-10 FZB
2	1	30665	Body holder hook left
3	1	30666	Body holder hook right
4	1	30670	Brace for cylinder body-holder left
5	1	30671	Brace for cylinder body-holder right
6	1	30675	Bottom part f bodyhook
7	2	30680	Bushing for body hook 20-10,2-15,8
8	4	30682	Bushing for body hook
9	1	30685	Eccentric for bodyholdsystem
10	1	30690	Bracket for bodysholdsystem
11	2	30731	Axel for body holder system
12	3	30732	Axel for body holder system
13	6	53406016	Hexagon countersunk head 6x16 Kval. 12.9

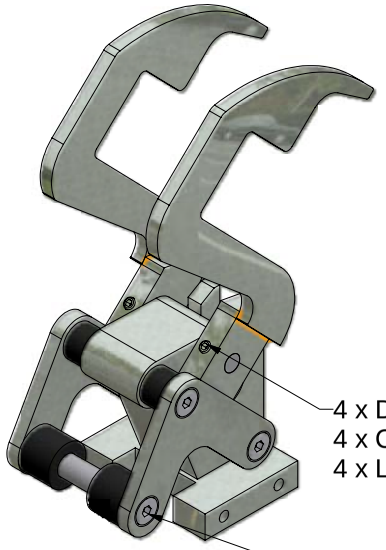

4 x Drill in to shaft
4 x Clean with MA-4000 Metal Klene
4 x Lock with Loctite 243

6 x Clean with MA-4000 Metal-Klene
6 x Lock with Loctite 243

This document is strictly confidential and must on no account be copied or disclosed to any third person.
HEDENSTED GRUPPEN A/S

Hedensted Gruppen	Skala/Scale: 1:1	Materiale/ Material:	Vægt/Weight: kg
		Overfl. beskaffenhed/ Surface properties:	Konst./Designed:
ID-Nr./Part No.: 30667	Udfoldet iht./ Unfolding according to:	Ikke angivet tolerancer iht./ Not specificed tolerance according to: DS/ISO 2768-m	Tegnet/Drafted: *Thomas Vittrup*
Filnavn/Filename: 30667 Ass. unit excentric bodyholde.iam			Dato/Date: 14-05-2004
Beskrivelse: Ass. unit excentric bodyholder			
Description:			
Sidst gemt af/Last saved by: **TV**	Sidst gemt/Last saved: **17-05-2004**	Papirstørrelse/Sheet size: A3	sheet 1 of 1

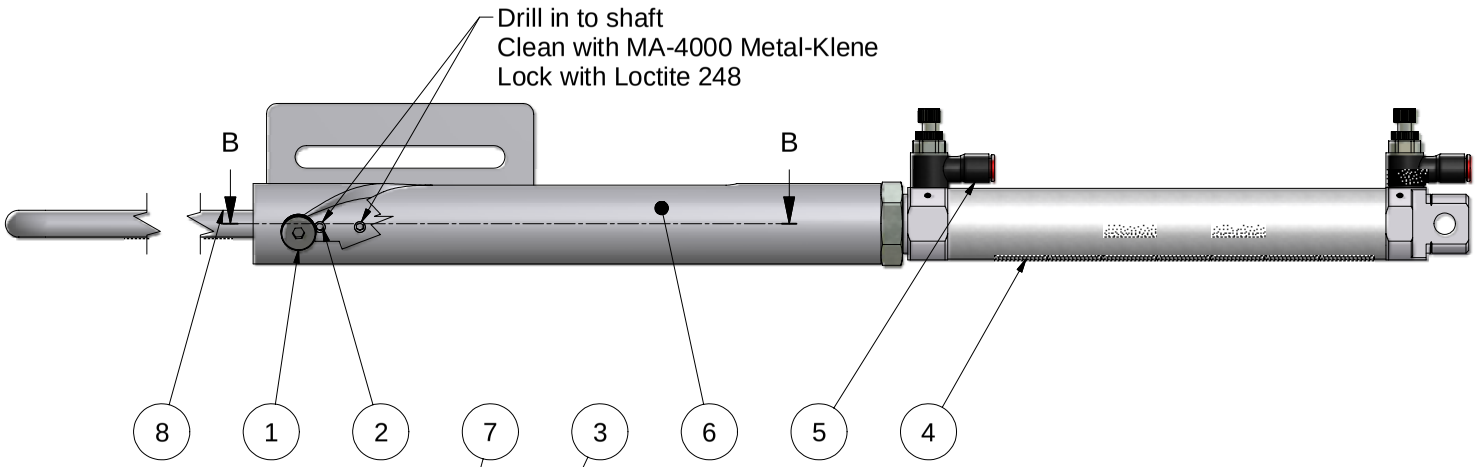

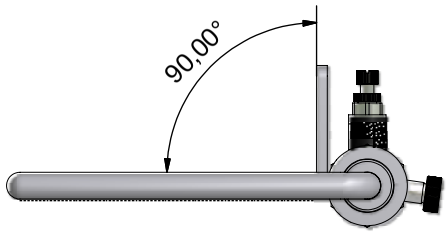

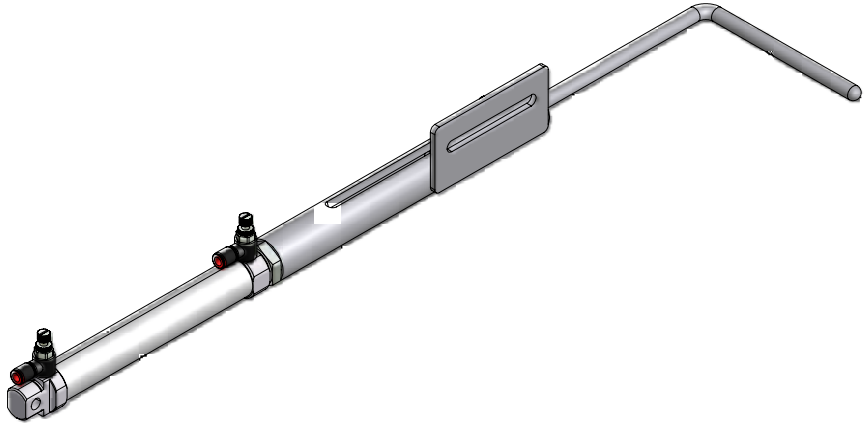

B-B (1 : 2)

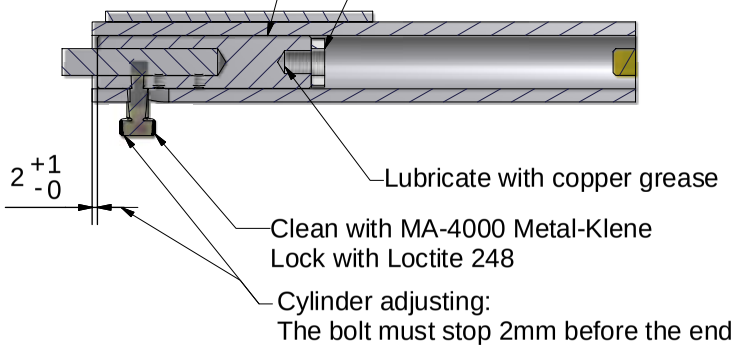

REVISION HISTORY			
REV	DESCRIPTION	DATE	APPROVED
A	Made	17-05-2004	
B	Renamed, Loctite type changed	11-06-2010	KC

Parts List			
ITEM	QTY	PART NUMBER	DESCRIPTION
1	1	20206012	Fitting bolt M6-8x12mm
2	2	20905005	Stop screw M5-5 FZB
3	1	210427	Lock nut MP150189_M10x1,25
4	1	211005	Cylinder RM/8026/M/125
5	2	215105	Banjo flow control Ø6 1/8"
6	1	30715	Col. pipeline for body holder
7	1	30725	Axle for pipe - bodyholder lock
8	1	30730	Roundsteel for bodylock

This document is strictly confidential and must on no account be copied or disclosed to any third person.
HEDENSTED GRUPPEN A/S

Hedensted Gruppen

Skala/Scale: 1:2	Materiale/ Material: Welded Steel Mild		Vægt/Weight: kg
	Overfl. beskaffenhed/ Surface properties:		Konst./Designed:
ID-Nr./Part No.: 30716	Udfoldet iht./ Unfolding according to:	Ikke angivet tolerancer iht./ Not specificed tolerance according to: DS/ISO 2768-m	Tegnet/Drafted: *Thomas Vittrup*
Filnavn/Filename: 30716 Assembly bodyholder.iam			Dato/Date: 14-05-2004
Beskrivelse: Assembly bodyholder			
Description:			
Sidst gemt af/Last saved by: **TV**	Sidst gemt/Last saved: **17-05-2004**	Papirstørrelse/Sheet size: A3	sheet 1 of 1

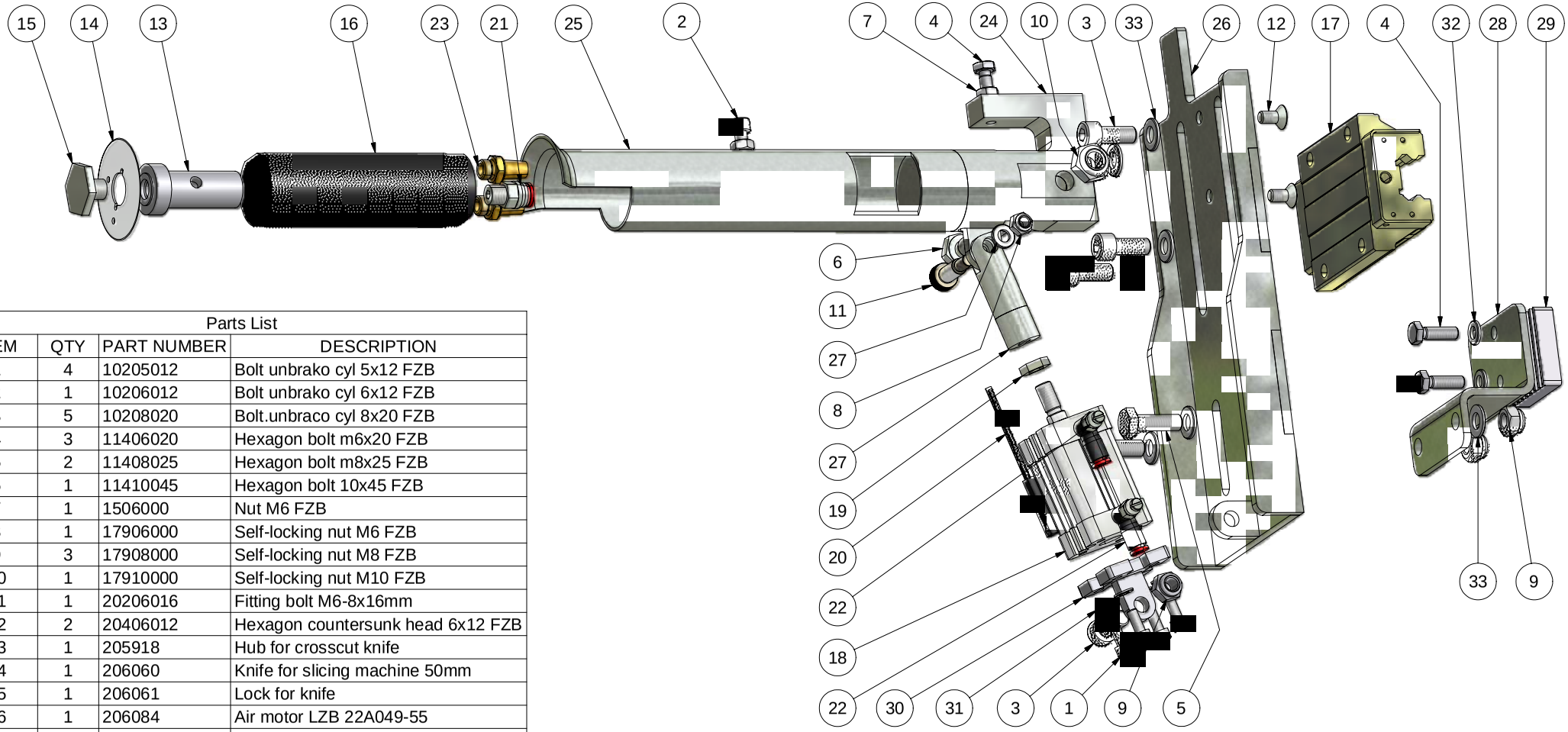

Parts List			
ITEM	QTY	PART NUMBER	DESCRIPTION
1	4	10205012	Bolt unbrako cyl 5x12 FZB
2	1	10206012	Bolt unbrako cyl 6x12 FZB
3	5	10208020	Bolt.unbraco cyl 8x20 FZB
4	3	11406020	Hexagon bolt m6x20 FZB
5	2	11408025	Hexagon bolt m8x25 FZB
6	1	11410045	Hexagon bolt 10x45 FZB
7	1	1506000	Nut M6 FZB
8	1	17906000	Self-locking nut M6 FZB
9	3	17908000	Self-locking nut M8 FZB
10	1	17910000	Self-locking nut M10 FZB
11	1	20206016	Fitting bolt M6-8x16mm
12	2	20406012	Hexagon countersunk head 6x12 FZB
13	1	205918	Hub for crosscut knife
14	1	206060	Knife for slicing machine 50mm
15	1	206061	Lock for knife
16	1	206084	Air motor LZB 22A049-55
17	1	207912	Ball runner block / SHS25CSS
18	1	210300	Cylinder RA/192020/M/25
19	1	210421	Lock nut M/P1501/60
20	1	214310	Reed contact M/50/EAP/5V
21	1	215900	Straight connector Ø6 1/8"
22	2	215980	Banjo flow control Ø4 M5
23	2	216796	Silencer 1/8" T40C-1800
24	1	30390	Bracket for crosscut knife
25	1	30431	Assembly console-bracket
26	1	30442	Assembly mountingplate for
27	1	30467	Assembly spring system
28	1	30470	Bracket for pulling of
29	1	30598	Clamping plate for AT5
30	1	30644	Assembly mountingbracket
31	4	82105900	Washer M5 FZB
32	3	82106000	Washer M6 FZB
33	8	82108000	Washer M8 FZB

REVISION HISTORY			
REV	DESCRIPTIO	DATE	APPROVED
A	Made	17-05-2004	KL
B	Renamed	06-05-2010	KC

This document is strictly confidential and must on no account be copied or disclosed to any third person.
HEDENSTED GRUPPEN A/S

Hedensted Gruppen

Skala/Scale: 1:2

Materiale/ Material: Welded Steel Mild

Overfl. beskaffenhed/ Surface properties:

Vægt/Weight: kg

Konst./Designed:

ID-Nr./Part No.: 30391

Udfoldet iht./ Unfolding according to:

Ikke angivet tolerancer iht./ Not specificed tolerance according to: DS/ISO 2768-m

Tegnet/Drafted: *Thomas Vittrup*

Filnavn/Filename: 30391 Assembly crosscut knife.iam

Dato/Date: 13-05-2004

Beskrivelse: Assembly crosscut knife

Description:

Sidst gemt af/Last saved by: **TV**

Sidst gemt/Last saved: **17-05-2004**

Papirstørrelse/Sheet size: A3

sheet 1 of 1

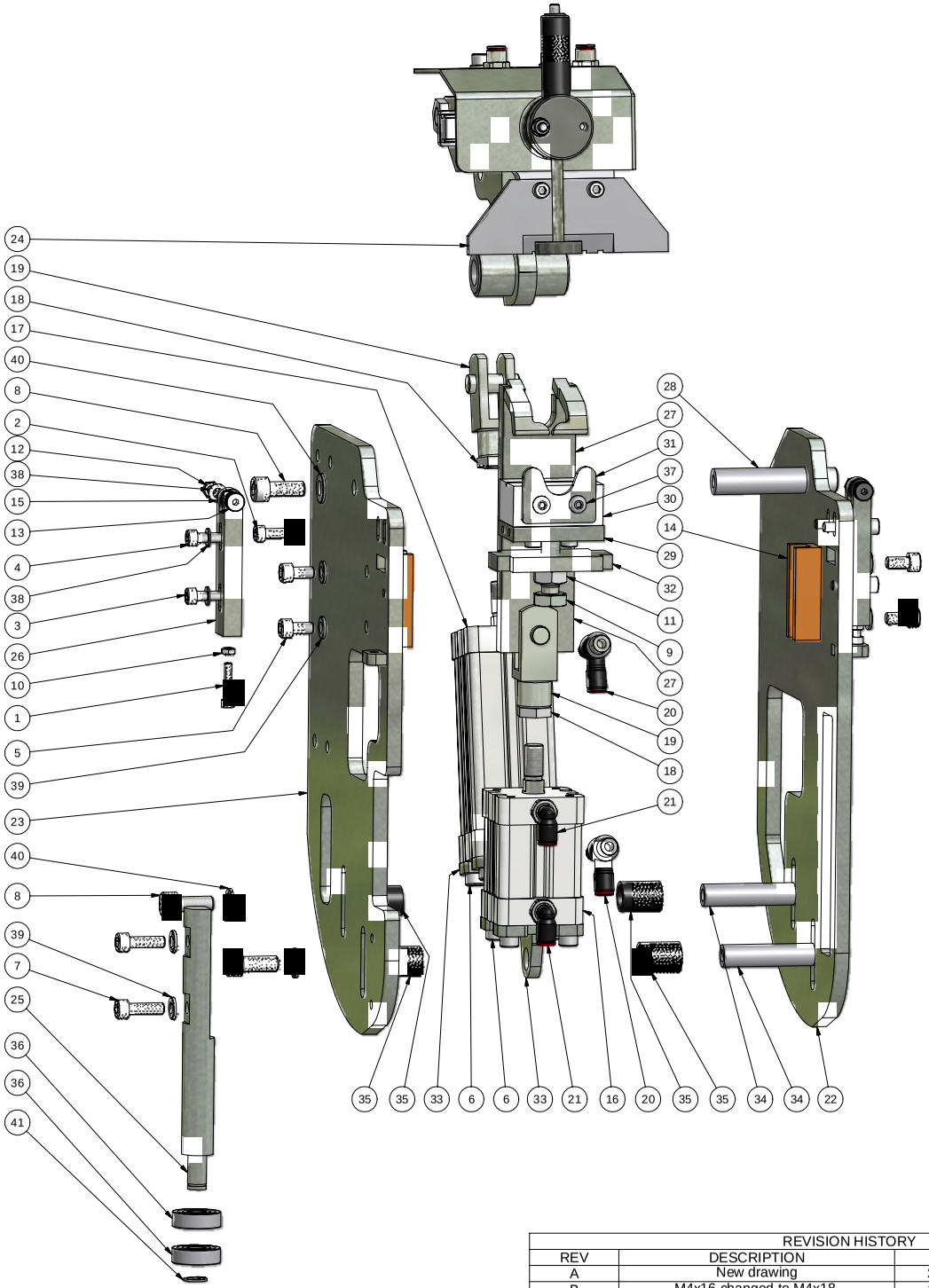

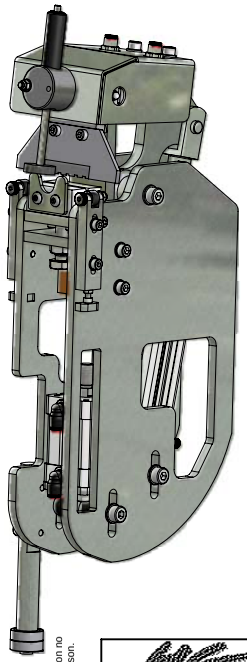

Parts List			
ITEM	QTY	PART NUMBER	DESCRIPTION
1	2	10204020	Bolt.unbraco cyl 4x20 FZB
2	4	10205016	Bolt unbrako cyl 5x16 FZB
3	2	10205020	Bolt unbrako cyl 5x20 FZB
4	2	10205025	Bolt unbrako cyl 5x25 FZB
5	4	10206012	Bolt unbrako cyl 6x12 FZB
6	8	10206016	Bolt. unbraco cyl 6x16 FZB
7	2	10206020	Bolt unbraco cyl 6x20 FZB
8	6	10208020	Bolt.unbraco cyl 8x20 FZB
9	1	11410030	Hexagon bolt 10x30 FZB
10	2	1504000	Nut M4 FZB
11	1	1510000	Nut M10 FZB
12	2	17905000	Self-locking nut M5 FZB
13	2	20205016	Fitting bolt M5-6x16mm
14	2	207865	Bearing for pawgrib
15	2	207948	Roller for paw cut with bushing
16	1	210320	Cylinder RA/192032/M/25
17	1	210340	Cylinder RA/192032/M/80
18	2	210427	Lock nut MP150189_M10x1,25
19	2	214115	F-Joint QM-8025-25
20	2	215105	Banjo flow control Ø6 1/8"
21	2	215760	Swirvel elbow Ø6mm 1/8"
22	1	30232	Assembly front plate for paw system, right
23	1	30233	Assembly back plate for paw system, right
24	1	30244	Pawcut system - Right
25	1	30375	Shaft for turning, pawsystem
26	2	30455	Bracket for stop, pawknife
27	1	30491	Paw clamp assembly
28	1	30566	Shaft for turning pawcut
29	1	30570	Plate for mounting pawgrib block
30	1	30575	Block for pawgrib
31	1	30576	Bracket for pawposition
32	1	30580	Adjustmentplate for pawgrib
33	2	30641	Assembly bracket for ø32cylinder
34	2	30642	Shaft for cylinders
35	4	30643	Spacer 12,2 x 21,8
36	2	473013	Bearing 6000 2 Rs1
37	2	76005012	Bolt buttonhead 5x12 FZB
38	8	82105900	Washer M5 FZB
39	6	82106000	Washer M6 FZB
40	6	82108000	Washer M8 FZB
41	1	89710000	Seeger ring for shaft Ø10 din 471

REVISION HISTORY			
REV	DESCRIPTION	DATE	APPROVED
A	New drawing	30-07-2006	kl
B	M4x16 changed to M4x18	17-08-2006	kl
C	Name changed	06-05-2010	KL

This document is strictly confidential and must on no account be copied or disclosed to any third person.
HEDENSTED GRUPPEN A/S

Hedensted Gruppen

Skala/Scale: 1:2	Materiale/ Material:		Vægt/Weight: kg
	Overfl. beskaffenhed/ Surface properties:		Konst./Designed:
ID-Nr./Part No.: 30241	Udfoldet iht./ Unfolding according to:	Ikke angivet tolerancer iht./ Not specificed tolerance according to: DS/ISO 2768-m	Tegnet/Drafted: Thomas Vittrup
Filnavn/Filename: 30241 Pawsystem, right side.iam			Dato/Date: 12-05-2004
Beskrivelse: Pawsystem, right side			
Description: Combi / Quickc cut			
Sidst gemt af/Last saved by: TV	Sidst gemt/Last saved: 16-05-2004	Papirstørrelse/Sheet size: A2	sheet 1 of 1

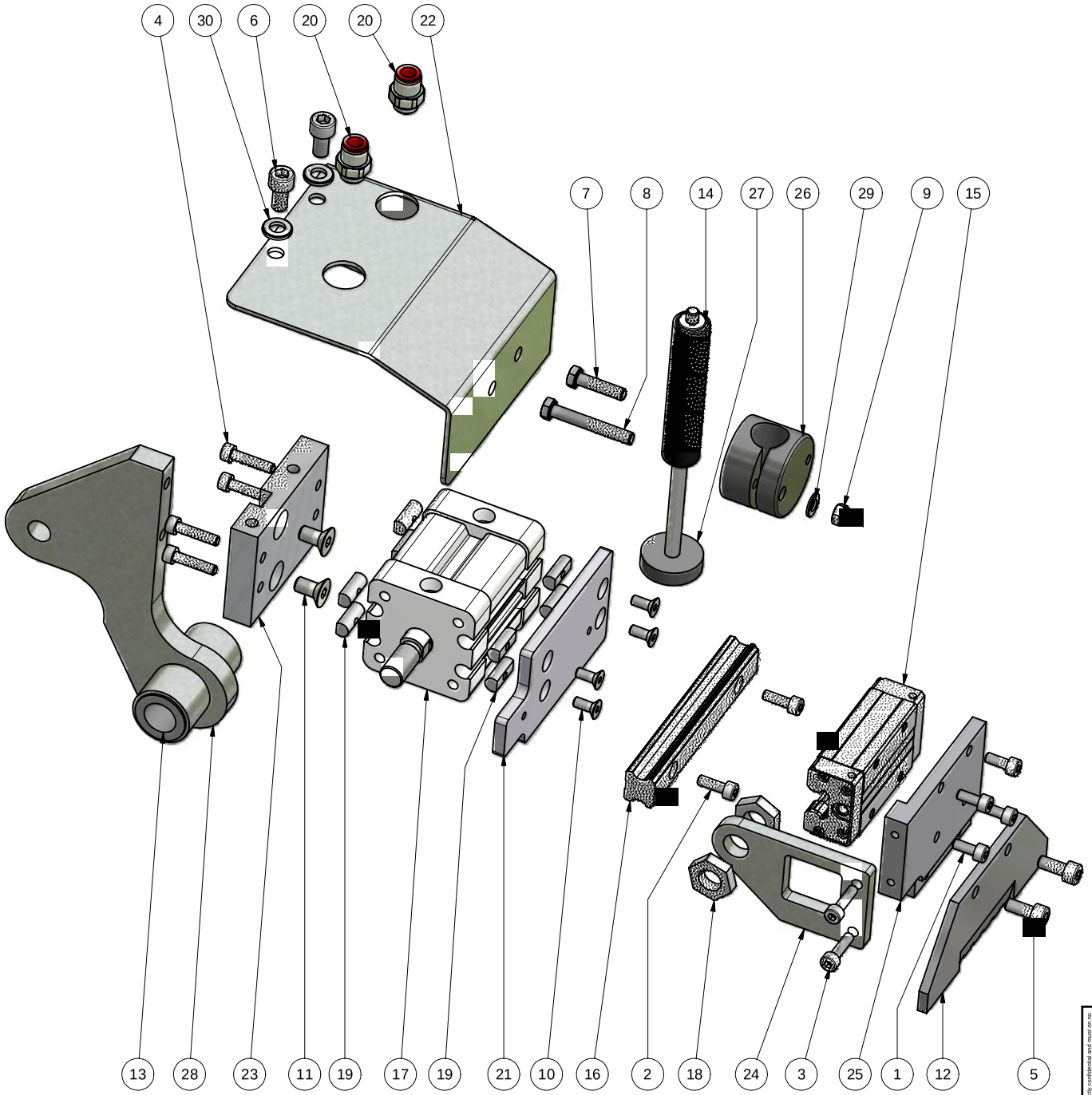

Parts List			
ITEM	QTY	PART NUMBER	DESCRIPTION
1	4	10204010	Bolt.unbraco cyl 4x10 FZB
2	2	10204012	Bolt.unbraco cyl 4x12 FZB
3	2	10204016	Bolt.unbraco cyl 4x16 FZB
4	4	10204018	Bolt.unbraco cyl 4x18 FZB
5	2	10205012	Bolt unbrako cyl 5x12 FZB
6	2	10206012	Bolt unbrako cyl 6x12 FZB
7	1	11405020	Hexagon bolt m5x20 FZB
8	1	11405035	Hexagon bolt m5x35 FZB
9	1	17905000	Self-locking nut M5 FZB
10	4	20404010	Hexagon countersunk head 4x10 FZB
11	2	20406012	Hexagon countersunk head 6x12 FZB
12	1	207825	Paw knife CC HSS110-62-40-4mm
13	2	207840	Slide Bearing GFM-1416-21
14	1	207875	Gas spring Ø6x50 50N
15	1	207907	Ball runner block / SHS15V
16	1	207909	Ball guide rail / SHS15+95mm
17	1	210330	Cylinder RA/192032/M/20
18	2	210427	Lock nut MP150189_M10x1,25
19	8	214184	Groove nut MP72816
20	2	216520	Straight connector Ø6mm 1/8"
21	1	30231	Mountingplater for right pawknife rail
22	1	30234	Saftyscreen for right pawknife
23	1	30238	Top for console, pawknife
24	1	30250	Bracket for pawknife
25	1	30251	Mountingpiece, right pawknife
26	1	30253	Bracket for gasspring, paw cut
27	1	30254	Pellet for gasspring
28	1	30323	Assembly, branch for turning
29	1	82105900	Washer M5 FZB
30	2	82106000	Washer M6 FZB

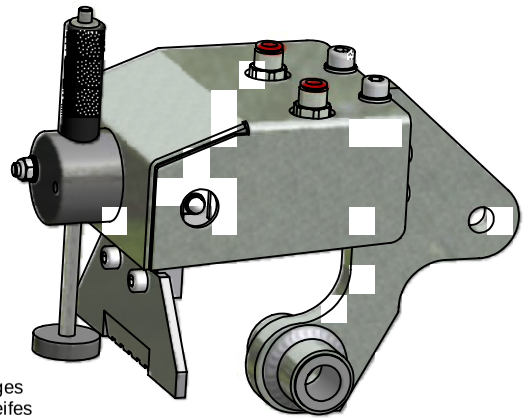

Break all edges
Alle kanter reifes

REVISION HISTORY			
REV	DESCRIPTION	DATE	APPROVED
A	New drawing	06-03-2007	KL

This document is strictly confidential and must on no account be copied or disclosed to any third person.
HEDENSTED GRUPPEN A/S

Hedensted Gruppen

Scale: 1:2

Ikke angivet tolerancer ihf./ Not specified tolerance according to: DS/ISO 2768-m

Overfl. beskaffenhed/Surface properties:

Konst./Designed:

Tegnet/Drafted: KL

Part No.: 30244

Udfoldet ihf./ Unfolding according to:

Material:

Date: 12-05-2004

Beskrivelse: Pawcut system - Right

Description: Combi / Quick cut

Sidst gemt af/Last saved by: KL

Sidst gemt/Last saved: 06-03-2007

Sheet size: A3

Sheet 1 / 1

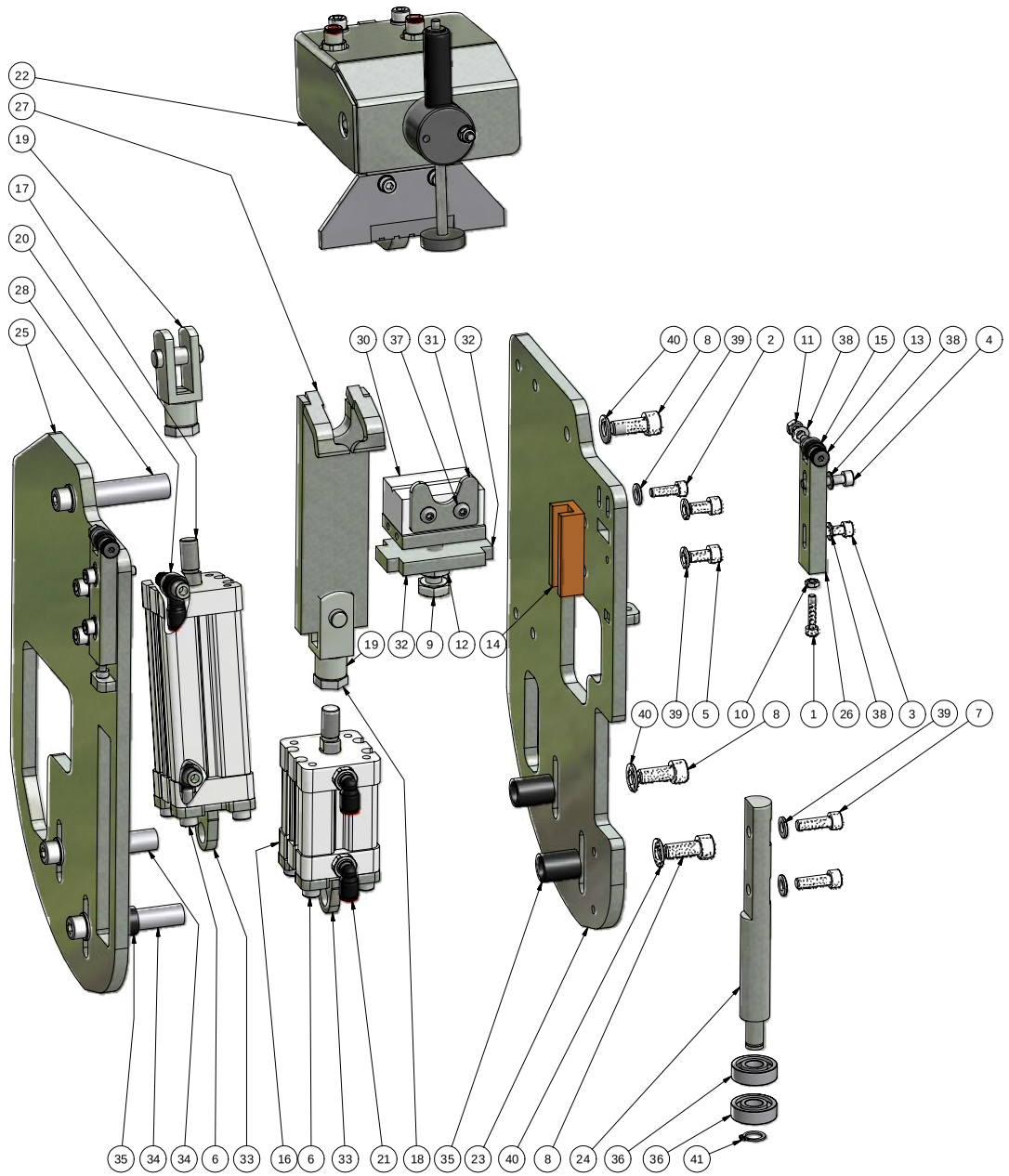

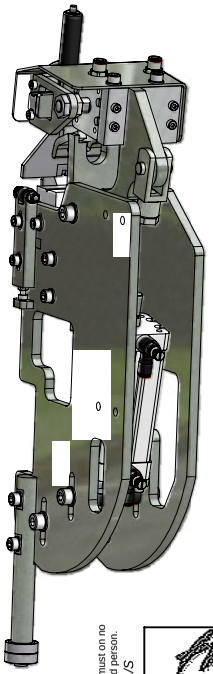

Parts List			
ITEM	QTY	PART NUMBER	DESCRIPTION
1	2	10204020	Bolt.unbraco cyl 4x20 FZB
2	4	10205016	Bolt unbrako cyl 5x16 FZB
3	2	10205020	Bolt unbrako cyl 5x20 FZB
4	2	10205025	Bolt unbrako cyl 5x25 FZB
5	4	10206012	Bolt unbrako cyl 6x12 FZB
6	8	10206016	Bolt. unbraco cyl 6x16 FZB
7	2	10206020	Bolt unbraco cyl 6x20 FZB
8	6	10208020	Bolt.unbraco cyl 8x20 FZB
9	1	11410030	Hexagon bolt 10x30 FZB
10	2	1504000	Nut M4 FZB
11	2	1505000	Nut M5 FZB
12	1	1510000	Nut M10 FZB
13	2	20205016	Fitting bolt M5-6x16mm
14	2	207865	Bearing for pawgrib
15	2	207948	Roller for paw cut with bushing
16	1	210320	Cylinder RA/192032/M/25
17	1	210340	Cylinder RA/192032/M/80
18	2	210427	Lock nut MP150189_M10x1,25
19	2	214115	F-Joint QM-8025-25
20	2	215105	Banjo flow control Ø6 1/8"
21	2	215760	Swirvel elbow Ø6mm 1/8"
22	1	30242	Pawcut system - Left
23	1	30356	Assembly back plate for paw system, left
24	1	30375	Shaft for turning, pawsystem
25	1	30396	Assembly, front plate for pawsystem, left
26	2	30455	Bracket for stop, pawknife
27	1	30491	Paw clamp assembly
28	1	30566	Shaft for turning pawcut
29	1	30570	Plate for mounting pawgrib block
30	1	30575	Block for pawgrib
31	1	30576	Bracket for pawposition
32	1	30580	Adjustmentplate for pawgrib
33	2	30641	Assembly bracket for ø32cylinder
34	2	30642	Shaft for cylinders
35	4	30643	Spacer 12,2 x 21,8
36	2	473013	Bearing 6000 2 Rs1
37	2	76005012	Bolt buttonhead 5x12 FZB
38	6	82105900	Washer M5 FZB
39	8	82106000	Washer M6 FZB
40	6	82108000	Washer M8 FZB
41	1	89710000	Seeger ring for shaft Ø10 din 471

REVISION HISTORY			
REV	DESCRIPTION	DATE	APPROVED
A	New drawing	30-07-2006	KL
B	M4x16 Changed til M4x17	17-08-2006	KL
C	Changed to RA cylindere	09-10-2006	KL
D	Name changed	06-05-2010	KL

This document is strictly confidential and must on no account be copied or disclosed to any third person.
HEDENSTED GRUPPEN A/S

Hedensted Gruppen

Skala/Scale: 1:2

Materiale/ Material:

Overfl. beskaffenhed/ Surface properties:

Vægt/Weight: kg

Konst./Designed:

ID-Nr./Part No.: 30243

Udfoldet iht./ Unfolding according to:

Ikke angivet tolerancer iht./ Not specificed tolerance according to: DS/ISO 2768-m

Tegnet/Drafted: *Thomas Vittrup*

Filnavn/Filename: 30243 Pawsystem, left side.iam

Dato/Date: 01-05-2004

Beskrivelse: Pawsystem, left side

Description: Combi / Quick cut

Sidst gemt af/Last saved by: **TV**

Sidst gemt/Last saved: **11-05-2004**

Papirstørrelse/Sheet size: A2

sheet 1 of 1

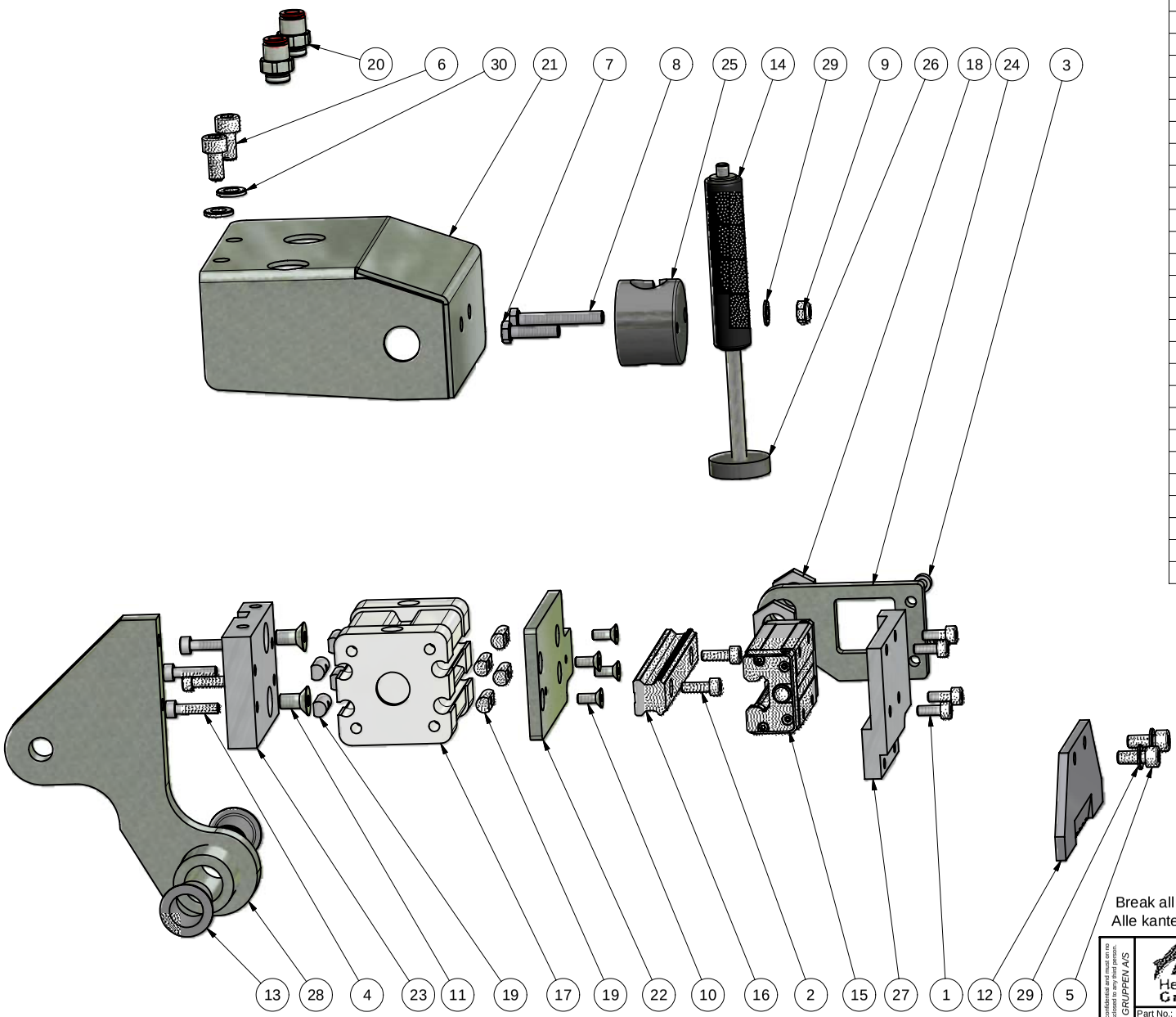

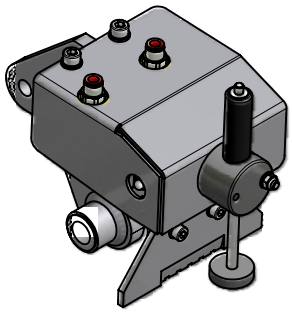

Parts List

ITEM	QTY	PART NUMBER	DESCRIPTION
1	4	10204010	Bolt.unbraco cyl 4x10 FZB
2	2	10204012	Bolt.unbraco cyl 4x12 FZB
3	2	10204016	Bolt.unbraco cyl 4x16 FZB
4	4	10204018	Bolt.unbraco cyl 4x18 FZB
5	2	10205012	Bolt unbrako cyl 5x12 FZB
6	2	10206012	Bolt unbrako cyl 6x12 FZB
7	1	11405020	Hexagon bolt m5x20 FZB
8	1	11405035	Hexagon bolt m5x35 FZB
9	1	17905000	Self-locking nut M5 FZB
10	4	20404010	Hexagon countersunk head 4x10 FZB
11	2	20406012	Hexagon countersunk head 6x12 FZB
12	1	207825	Paw knife CC HSS110-62-40-4mm
13	2	207840	Slide Bearing GFM-1416-21
14	1	207875	Gas spring Ø6x50 50N
15	1	207907	Ball runner block / SHS15V
16	1	207909	Ball guide rail / SHS15+95mm
17	1	210330	Cylinder RA/192032/M/20
18	2	210427	Lock nut MP150189_M10x1,25
19	8	214184	Groove nut MP72816
20	2	216520	Straight connector Ø6mm 1/8"
21	1	30236	Safty screen for left pawknife
22	1	30237	Mountingplate for left pawknife rail
23	1	30238	Top for console, pawknife
24	1	30250	Bracket for pawknife
25	1	30253	Bracket for gasspring, paw cut
26	1	30254	Pellet for gasspring
27	1	30285	Mountingpiece for left pawknife
28	1	30323	Assembly, branch for turning
29	3	82105900	Washer M5 FZB
30	2	82106000	Washer M6 FZB

Break all edges
Alle kanter reifes

This document is strictly confidential and must on no account be copied or disclosed to any third person.
HEDENSTED GRUPPEN A/S

Hedensted Gruppen

Scale: 1:2	Ikke angivet tolerancer iht./ Not specified tolerance according to: DS/ISO 2768-m		Konst./Designed:
	Overfl. beskaffenhed/Surface properties:		Tegnet/Drafted: KL
Part No.: 30242	Udfoldet iht./ Unfolding according to:	Material:	Date: 01-05-2004
Beskrivelse: Pawcut system - Left			
Description: Combi / Quick cut			
Sidst gemt af/Last saved by: KL	Sidst gemt/Last saved: 06-03-2007	Sheet size: A3	Sheet 1 / 1

REVISION HISTORY			
REV	DESCRIPTION	DATE	APPROVED
A	Made	19-05-2010	KC

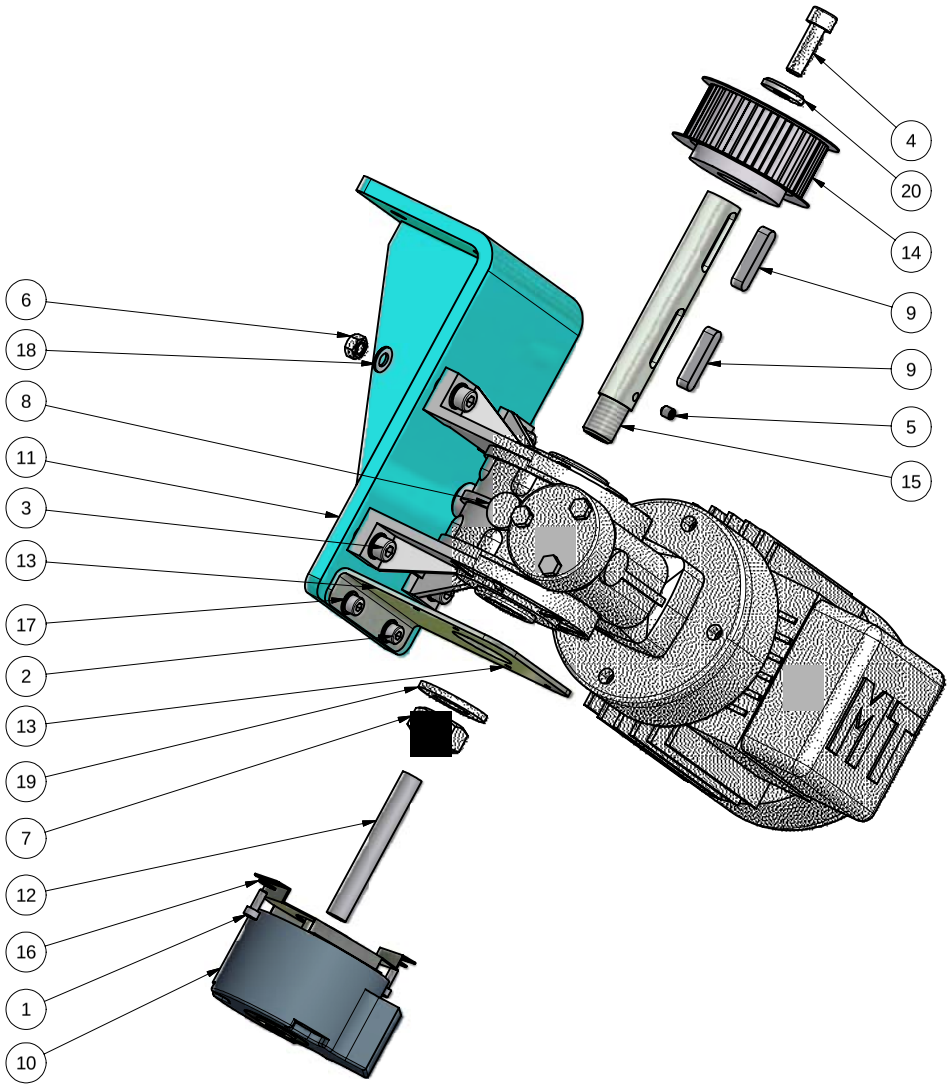

Parts List

ITEM	QTY	PART NUMBER	DESCRIPTION
1	2	10203008	Bolt Unbraco cyl 3x8 FZB
2	2	10204010	Bolt.unbraco cyl 4x10 FZB
3	4	10205020	Bolt unbrako cyl 5x20 FZB
4	1	10206020	Bolt unbraco cyl 6x20 FZB
5	1	10504005	Stop screw 4x5 black
6	4	1505000	Nut M5 FZB
7	1	1512000	Nut M12 FZB
8	1	207904	Gearmotor RMI 28S56B14
9	2	207946	Key 5x5x25mm DIN-6885A
10	1	207956	Encoder Type 8.5020.C922.0500
11	1	30144	Small engine bracket
12	1	30171	Shaft for encoder
13	1	30173	Bracket for encoder crosscut knife
14	1	30600	Pulley AT5 Z32 gear side
15	1	30780	Shaft for crosscut knife
16	2	82103000	Washer M3 FZB
17	2	82104000	Washer M4 FZB
18	8	82105900	Washer M5 FZB
19	1	82112000	Washer M12 FZB
20	1	87606000	Washer ø6,5x16,5x3 FZB

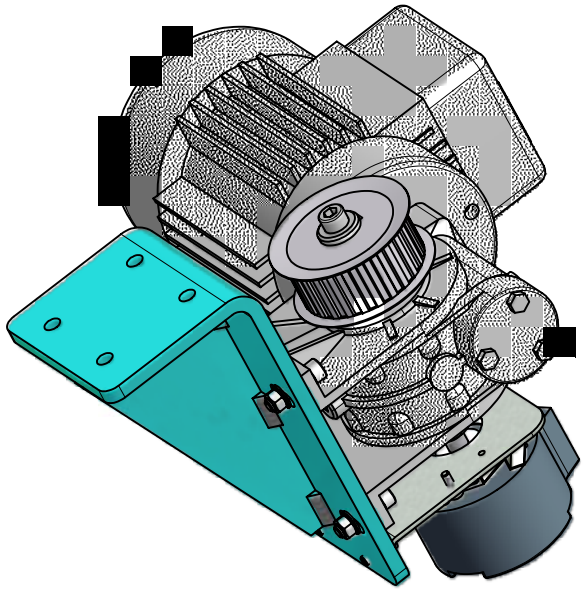

Alle kanter reifes

This document is strictly confidential and must on no account be copied or disclosed to any third person.
HEDENSTED GRUPPEN A/S

Hedensted Gruppen

Scale:	Ikke angivet tolerancer iht./ Not specificed tolerance according to: DS/ISO 2768-m		Konst./Designed:
	Overfl. beskaffenhed/Surface properties:		Tegnet/Drafted: KL
Part No.: 207853	Udfoldet iht./ Unfolding according to:	Material:	Date: 05-03-2007
Beskrivelse: Gear for crossent knife			
Description:			
Sidst gemt af/Last saved by:	Sidst gemt/Last saved: 06-03-2007	Sheet size: A3	Sheet 1 / 1

Parts List			
ITEM	QTY	PART NUMBER	DESCRIPTION
1	2	10203008	Bolt Unbraco cyl 3x8 FZB
2	1	11408016	Hexagon bolt m8x16 FZB
3	1	207902	Gearmotor high-effect with breake
4	2	207947	Key 8x7x32mm DIN-6885A
5	1	207956	Encoder Type 8.5020.C922.0500
6	1	20905010	Stop screw M5-10 FZB
7	1	30171	Shaft for encoder
8	2	30172	Bracket for encoder
9	1	30266	Pulley AT10 Z24 - gear side
10	1	30267	Spacer for large gear
11	1	30775	Shaft for large gearmotor
12	1	30776	Nut for large gearmotor
13	1	4809335	Washer type SRKB ø9x35x3
14	1	4814335	Washer Type SRKB ø14x35x3
15	2	82103000	Washer M3 FZB

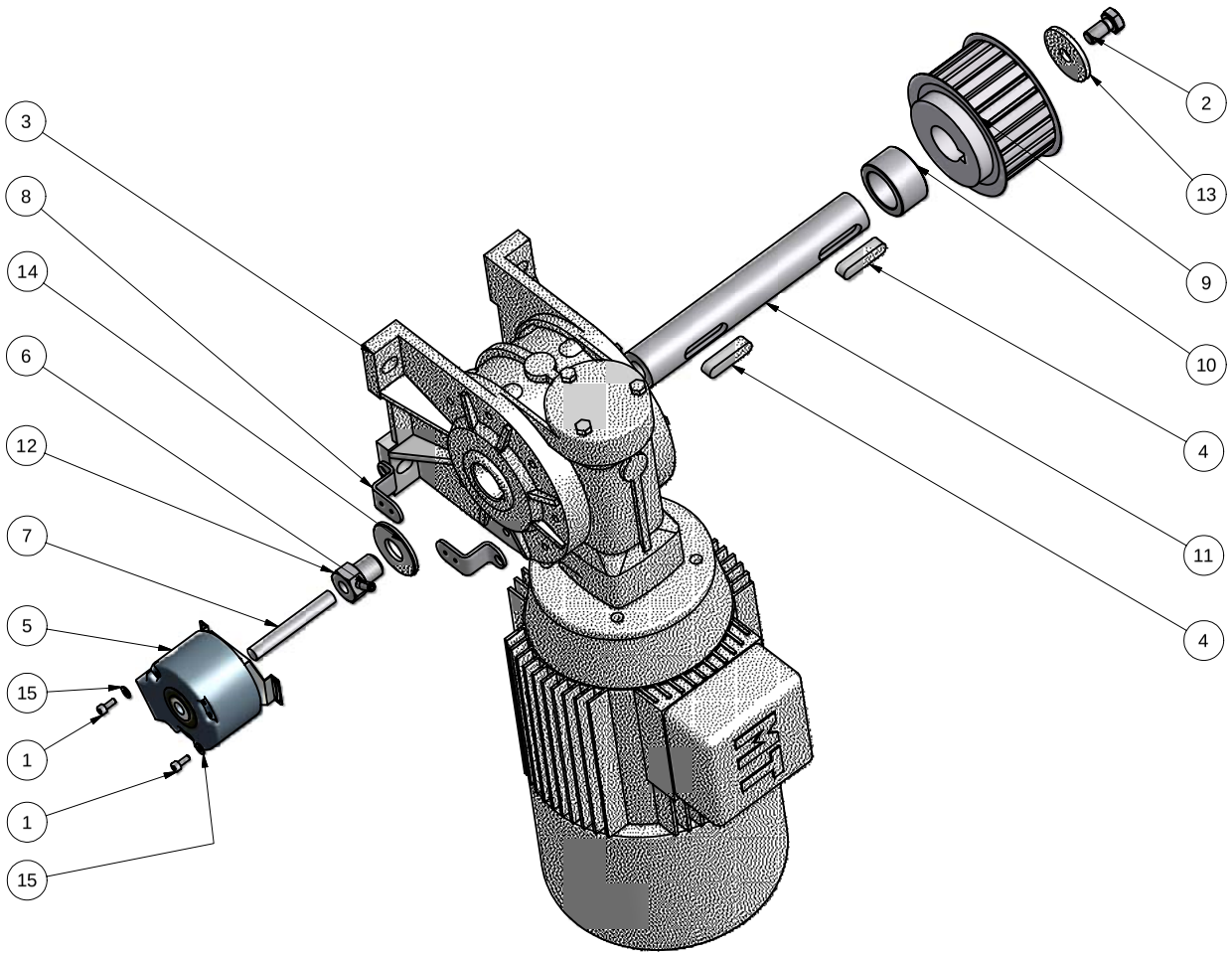

Alle kanter reifes

REVISION HISTORY			
REV	DESCRIPTION	DATE	APPROVED
A	Made	20-05-2010	KC

This document is strictly confidential and must on no account be copied or disclosed to any third person.
HEDENSTED GRUPPEN A/S

Hedensted Gruppen

Scale:

Ikke angivet tolerancer iht./ Not specified tolerance according to: DS/ISO 2768-m

Konst./Designed:

Overfl. beskaffenhed/Surface properties:

Tegnet/Drafted: KL

Part No.: 207852

Udfoldet iht./ Unfolding according to:

Material:

Date: 02-03-2007

Beskrivelse: Gear for tower

Description:

Sidst gemt af/Last saved by:

Sidst gemt/Last saved: 05-03-2007

Sheet size: A3

Sheet 1 / 1
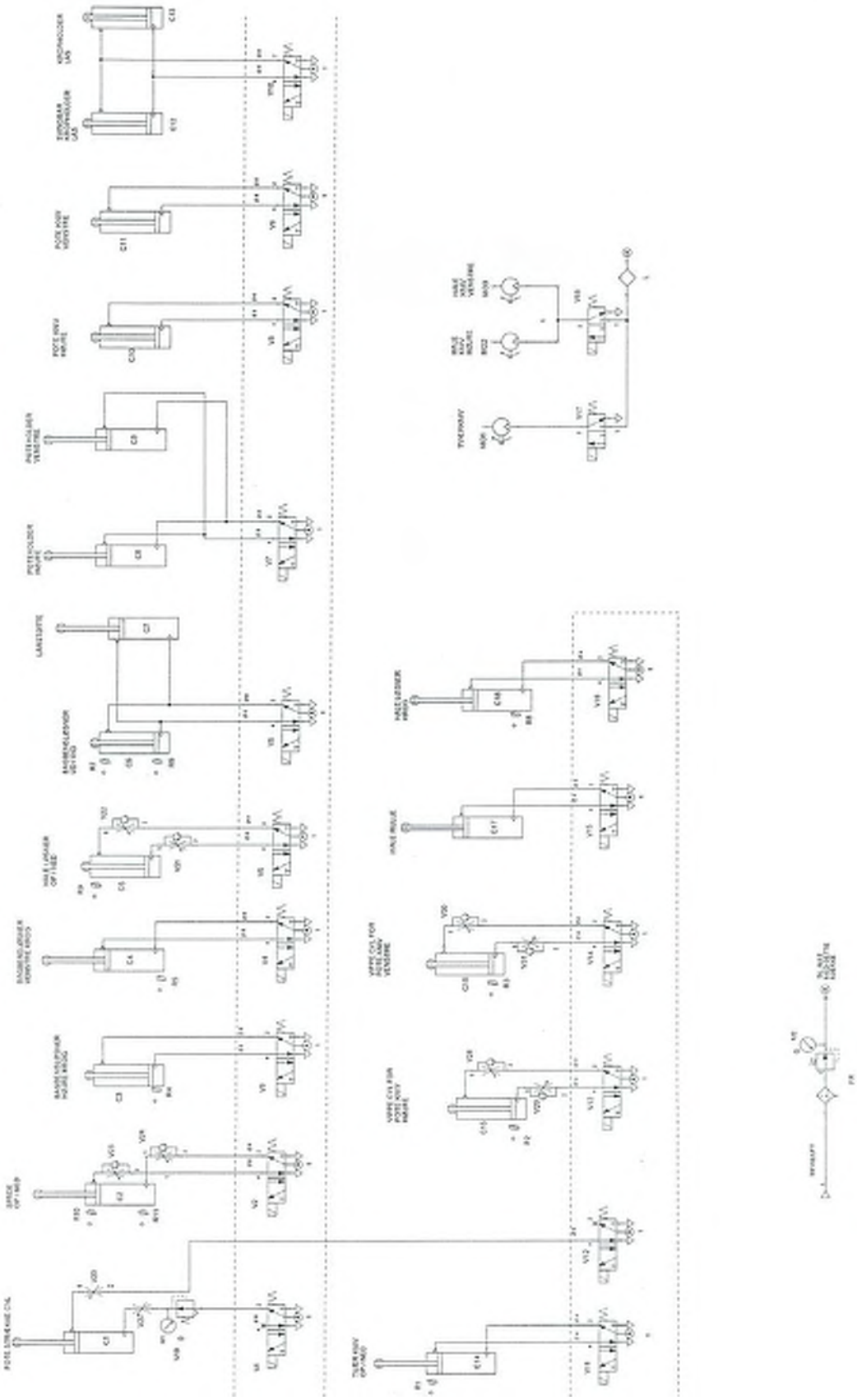
14. Luftdiagram