SPARE PARTS

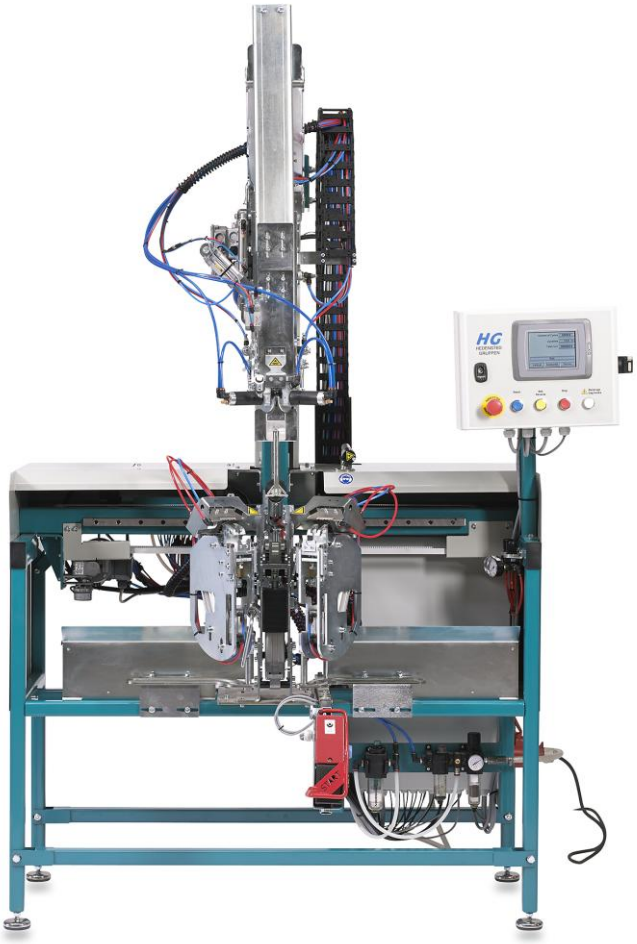

HG COMBI CUT

With touch

20-07-2017

Model 2017-20xx

1. Table of contents.

1. Table of content
2. Spare parts
3. Air diagrams
4. Electric diagrams

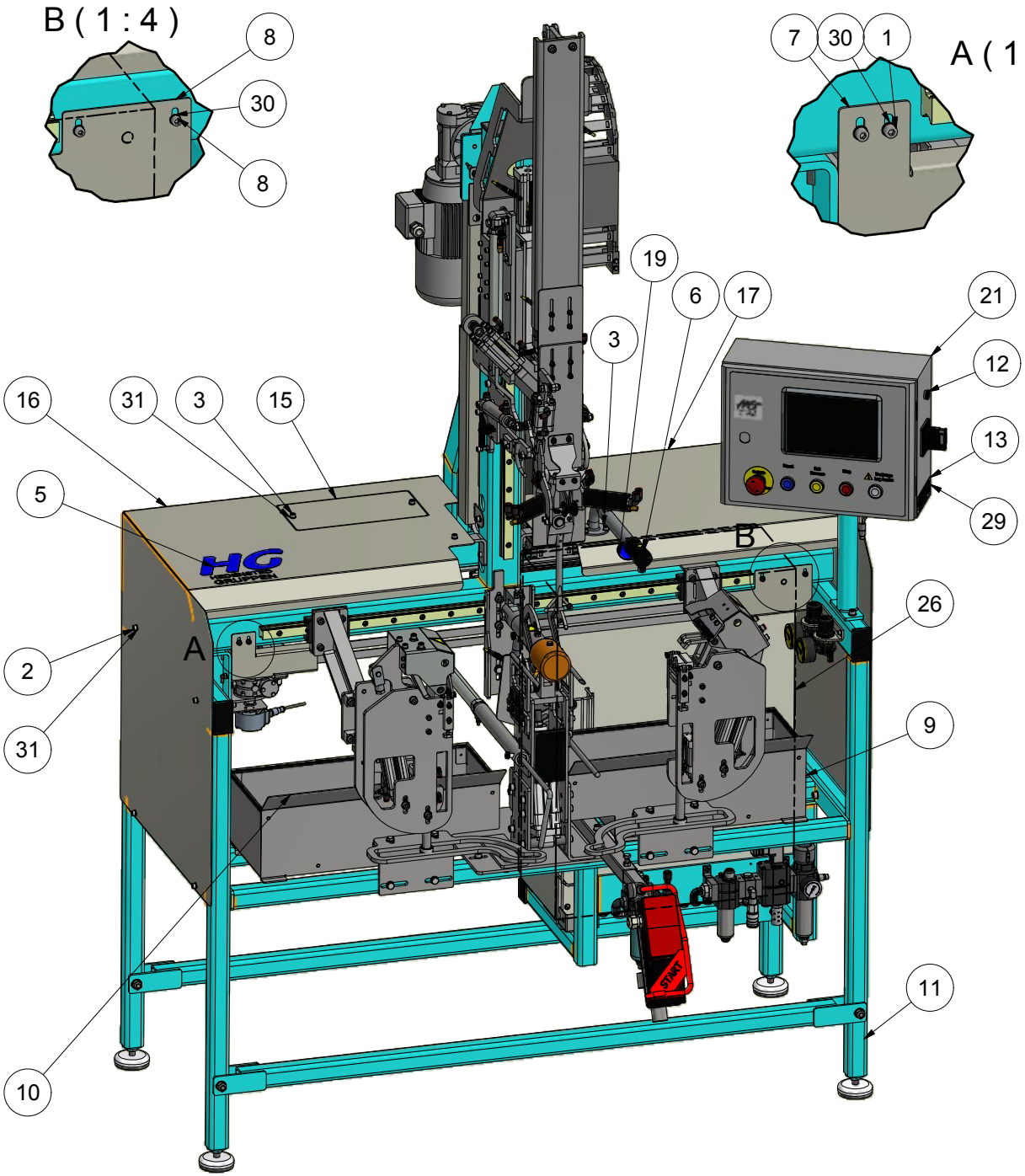

PARTS LIST			
ITEM	QTY	PART NUMBER	DESCRIPTION
1	4	10205010	Hexagon cylinder head M5x10 FZB
2	12	10206010	Hexagon cylinder head M6x10 FZB
3	5	10206016	Hexagon cylinder head M6x16 FZB
4	3	17906000	Self-locking nut M6 FZB
5	1	19767	HG Logo - big 205x108mm
6	1	207808	Laser light set for CC & QC
7	1	207858	Left screen, horisontial belt
8	1	207859	Right screen, horsiontial belt
9	1	207970	Right paw box 2010 CC
10	1	207972	Left paw box 2010 CC
11	1	207999	Base assembly 2 for Combi Cut 2010
12	1	222342	Magnet Actual 20mm round black
13	1	30040	Id plate Combi cut 2010
14	6	30129	Electric installation CC
15	1	30788	Lid for cover
16	1	30791	Cover for machine
17	1	30796	Cover for machine
18	1	31006	Warning sign high voltage
19	1	31010	Warning sign, Ear protec.
20	0,1 l	476560	Oil VG5 Q8 Dynebear 5
21	1	600303	Cabinet assembly 300x400x150
22	5,0 m	600528	Cable OZ 4x0,75mm² PVC
23	1,0 m	600635	Cable JZ 3x0,75mm² PVC
24	5,6 m	600640	Cable JZ 5x2,5mm² PVC
25	5,0 m	600645	Cable CY-JZ 4x1,0mm² PVC w/screen
26	1	600932	Cabinet assembly
27	5,0 m	601000	Cable OZ 2x0,75mm² PVC
28	2,6 m	601005	Cable JZ 12x0,75mm² PVC
29	2	7003208	Blind rivet Ø3.2x8 (4-5,5)
30	4	82105900	Washer M5 FZB
31	20	82106000	Washer M6 FZB

Break all edges

Revision:	Approved	Date:	Revision Description
2	MBO	19-05-2017	Pawsystem, leghooksystem, bodyholder changed

The document is strictly confidential and may in no account be copied or discloses to any third person HEDENSTED GRUPPEN A/S

HEDENSTED GRUPPEN

Scale: 1 : 9	Not specificed tolerance according to: DS/ISO 2768-m		Sheet size: A3
	Surface properties: No		Sheet: 1 /2
Part No.: 207802	Material:		
Description 1: HG Combi Cut 2010 with laser-			
Description 2: beam and quick pressure shift			

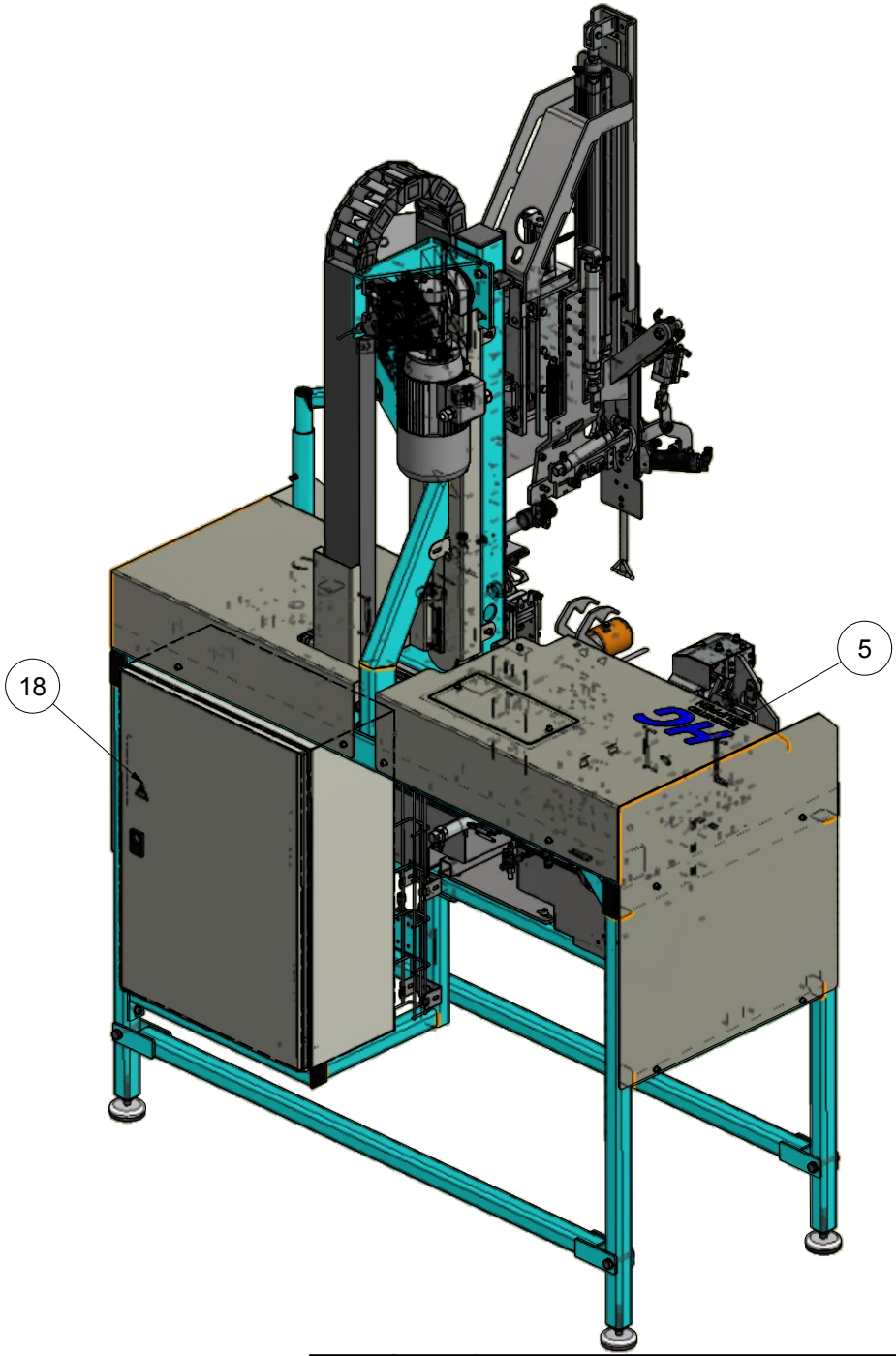

C (1 : 10)

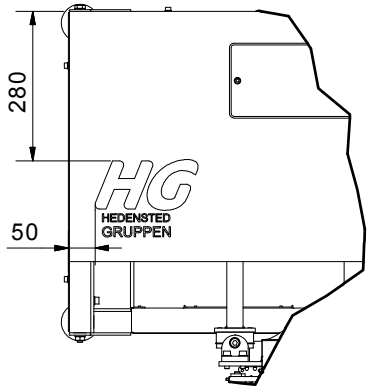

Break all edges

Revision:	Approved	Date:	Revision Description
2	MBO	19-05-2017	Pawsystem, leghooksystem, bodyholder changed

The document is strictly confidential and may in no account be copied or disclosed to any third person.
HEDENSTED GRUPPEN A/S

HEDENSTED GRUPPEN

Scale: 1 : 9	Not specificed tolerance according to: DS/ISO 2768-m	Sheet size: A3
	Surface properties: No	Sheet: 2 /2
Part No.: 207802	Material:	
Description 1: HG Combi Cut 2010 with laser-		
Description 2: beam and quick pressure shift		

Parts List			
ITEM	QTY	PART NUMBER	DESCRIPTION
1	1	206681	Handle, Ø22 knob M6 x 10mm
2	1	207831	Housing for laser mondule
3	1	207833	Outer pipe for laser
4	1	207837	Inner pipe for laser
5	1	207839	Voltage regulator 24V-3VDC
6	1	207963	Housing for lens
7	1	207964	Laser Mondule RLLH635-4-3
8	1	207965	Lens for laser
9	1	30906	Rubber washer for print
10	1	31005	Warning sign Laser
11	1	76005016	Buttonhead bolt M5x15 FZB
12	1	M10382	Conical plug 16mm
13	1	31005	Warning sign Laser

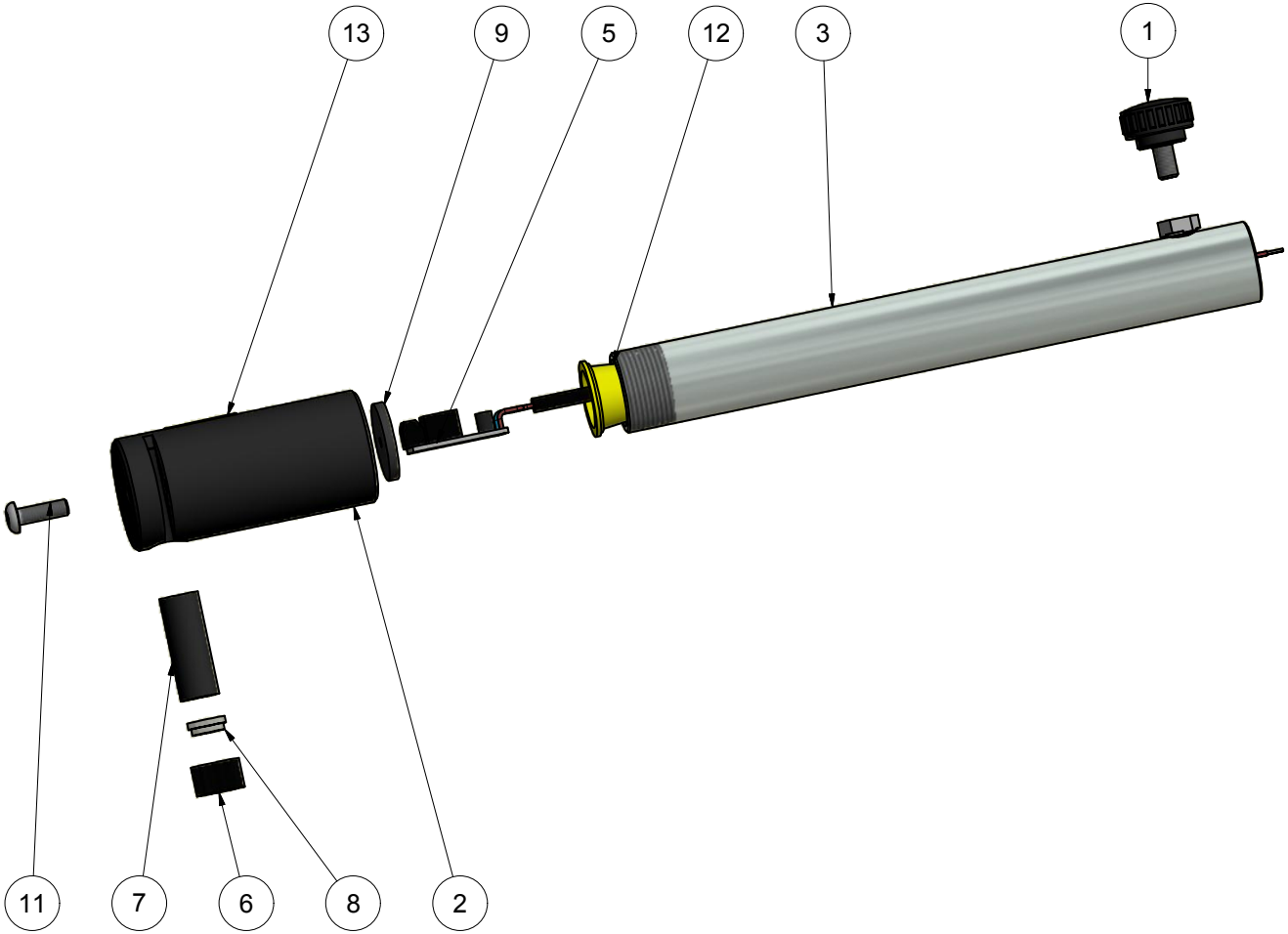

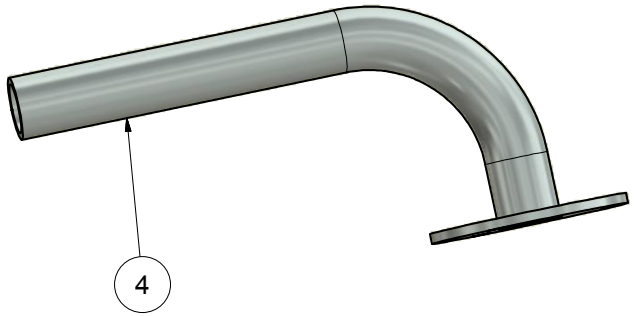

Break all edges

Break all edges

Revision:	Approved	Date:	Revision Description
1	KL	15-12-2016	Print updated

The document is strictly confidential and can in no account be copied or discloses to any third person.
HEDENSTED GRUPPEN A/S

HEDENSTED GRUPPEN

Scale: 1 : 1	Not specificed tolerance according to: DS/ISO 2768-m		Sheet size: A3
	Surface properties:		Sheet: 1 /1
Part No.: 207808	Material:		
Description 1: Laser light set for CC & QC			
Description 2:			

Parts List			
ITEM	QTY	PART NUMBER	DESCRIPTION
1	1	31060	Part 3 for right paw box
2	1	31070	Part 2 for right paw box
3	1	31080	Part 1 for paw box
4	1,0 m	423431	Edge protection strip
5	8	7003208	Pop rivet ø3.2x8mm

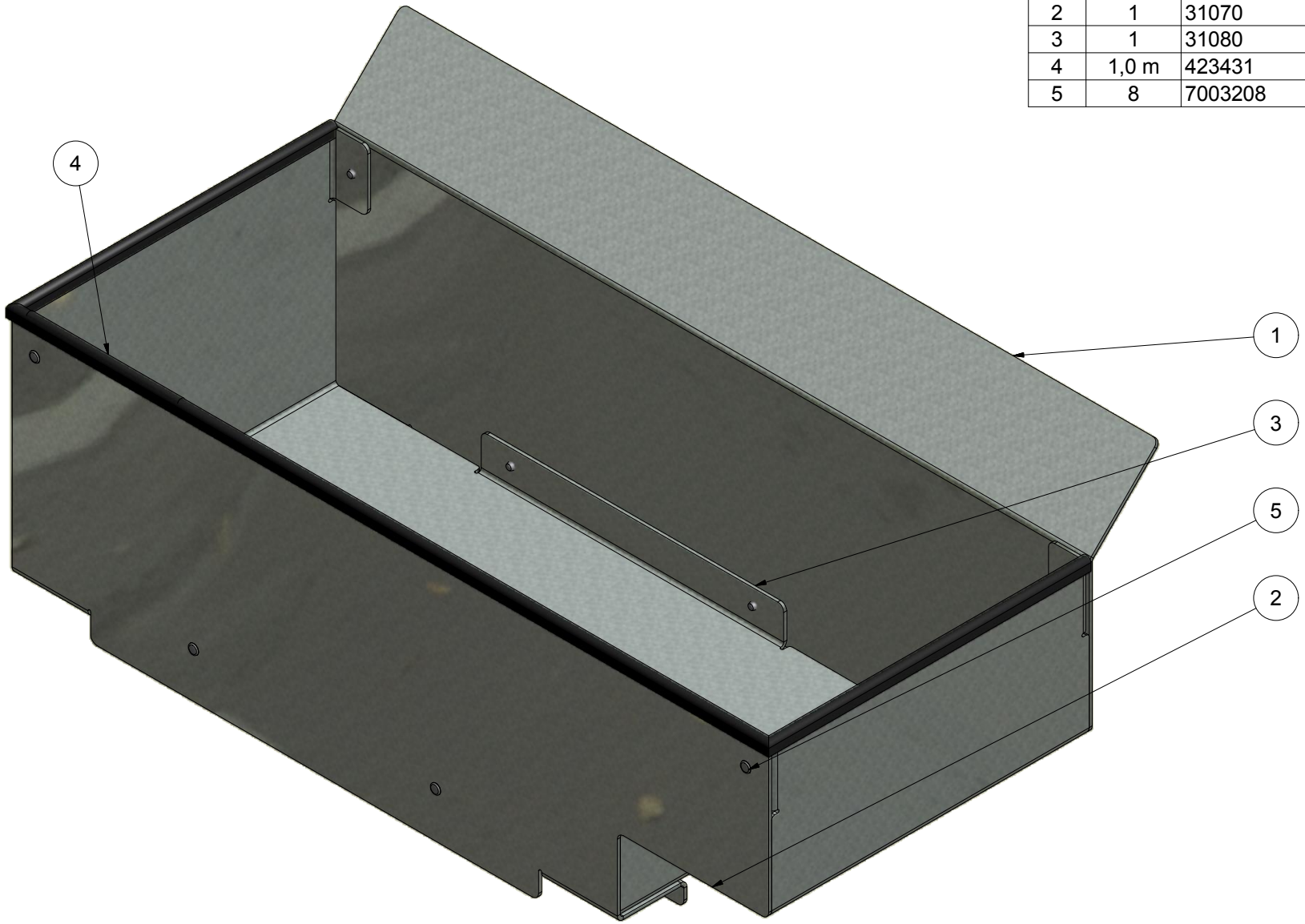

Break all edges

Revision:	Approved	Date:	Revision Description
1	HG	28-09-2015	Revision changed to numeric

The document is strictly confidential and can in no account be copied or discloses to any third person.
HEDENSTED GRUPPEN A/S

HEDENSTED GRUPPEN

Scale: 1 : 2	Not specificed tolerance according to: DS/ISO 2768-m		Sheet size: A3
	Surface properties:		Sheet: 1 /1
Part No.: 207970	Material:		
Description 1: Right paw box 2010 CC			
Description 2:			

Parts List			
ITEM	QTY	PART NUMBER	DESCRIPTION
1	1	31065	Part 3 for lift paw box
2	1	31075	Part 2 for left paw box
3	1	31080	Part 1 for paw box
4	1,0 m	423431	Edge protection strip
5	8	7003208	Pop rivet ø3.2x8mm

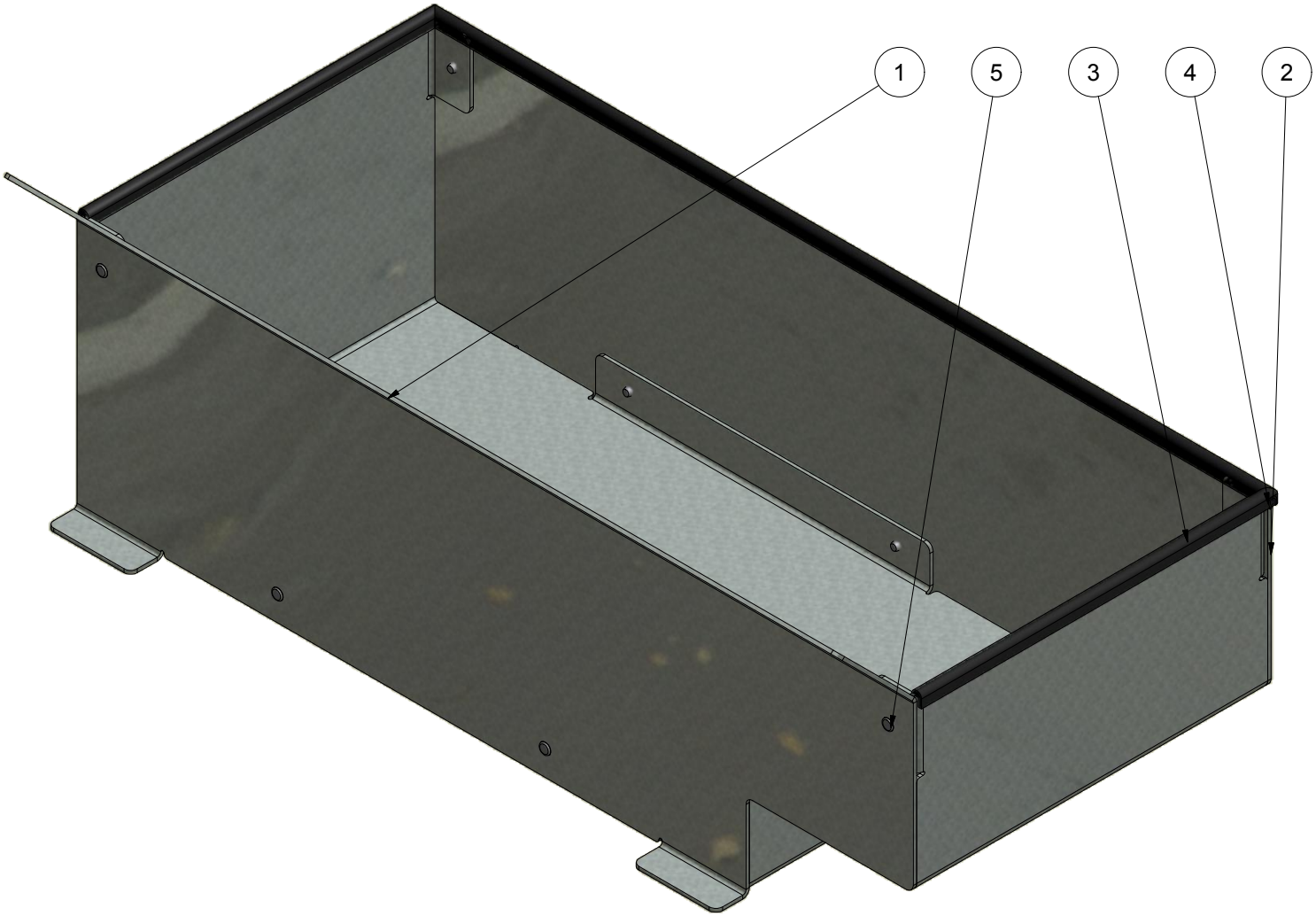

Break all edges

Revision:	Approved	Date:	Revision Description
1	HG	28-09-2015	Revision changed to numeric

The document is strictly confidential and can in no account be copied or discloses to any third person.
HEDENSTED GRUPPEN A/S

HEDENSTED GRUPPEN

Scale: 1 : 2	Not specificed tolerance according to: DS/ISO 2768-m		Sheet size: A3
	Surface properties:		Sheet: 1 /1
Part No.: 207972	Material:		
Description 1: Left paw box 2010 CC			
Description 2:			

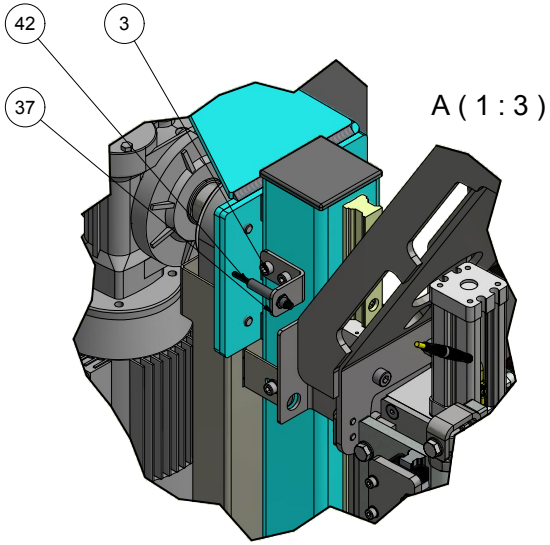

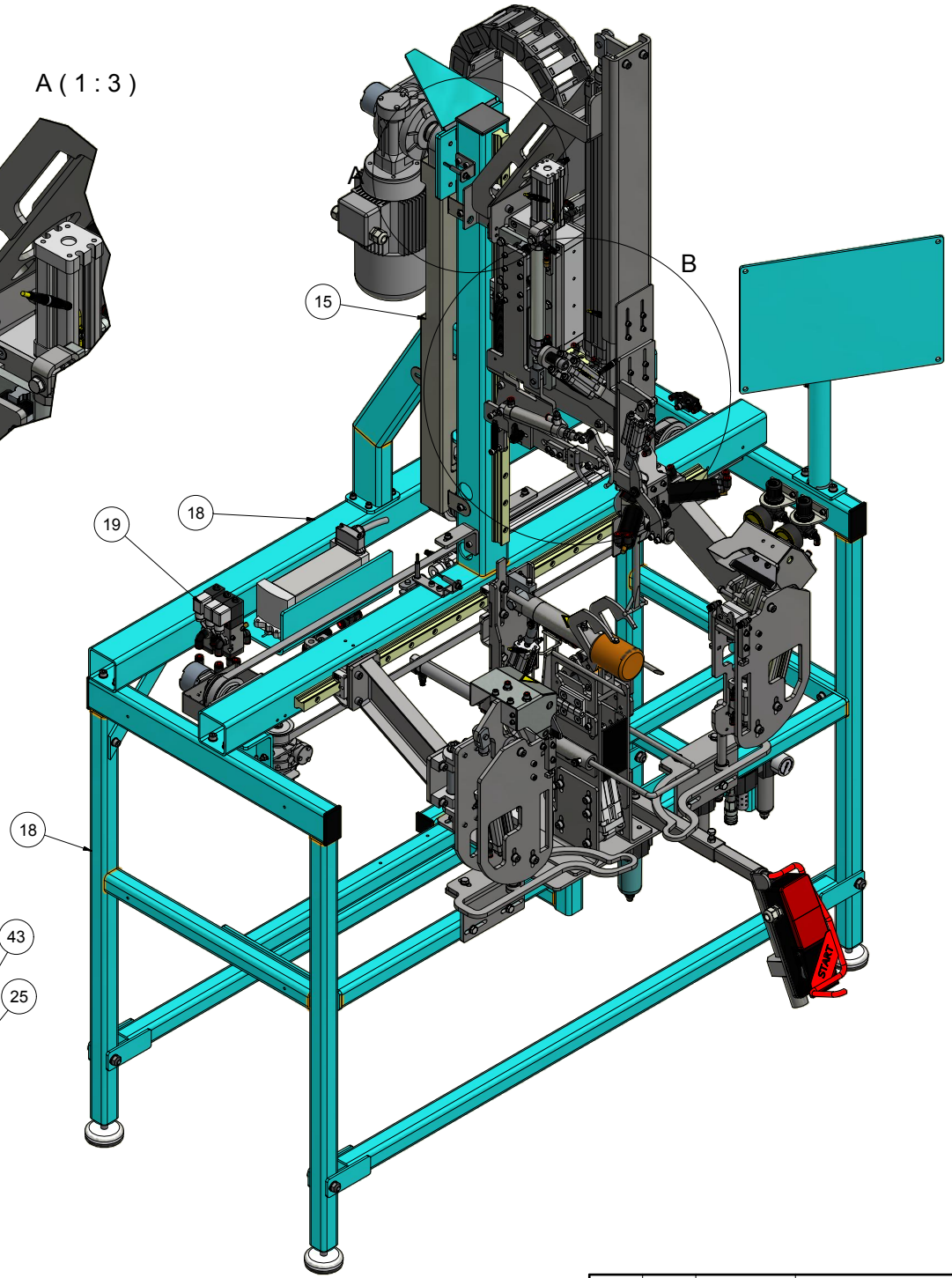

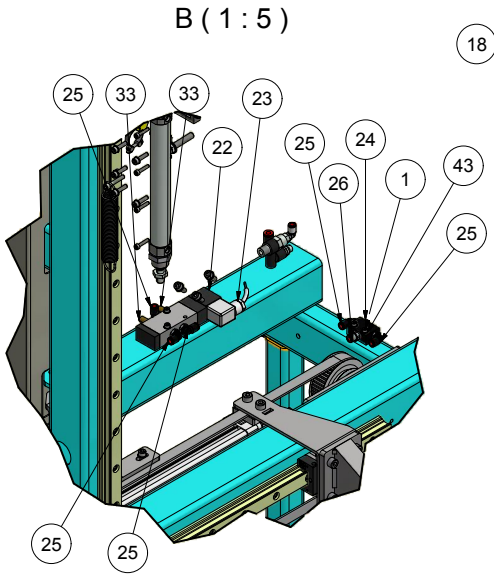

PARTS LIST

ITEM	QTY	PART NUMBER	DESCRIPTION
1	4	10204030	Hexagon cylinder head M4x30 FZB
2	4	10205010	Hexagon cylinder head M5x10 FZB
3	12	10206016	Hexagon cylinder head M6x16 FZB
4	8	10208025	Hexagon cylinder head M8x25 FZB
5	8	11405055	Hexagon bolt M5x55 FZB
6	4	11408016	Hexagon bolt M8x16 FZB
7	8	17905000	Self-locking nut M5 FZB
8	1	17906000	Self-locking nut M6 FZB
9	1	17908000	Self-locking nut M8 FZB
10	4	20404010	Hexagon countersunk head M4x10 FZB
11	1	207952	Energi chain 95x42mm 33 links
12	1	207953	Mountingbrackets Igus
13	1	207962	Assembly arm-pull pawholder
14	1	207977	Arm for pull pawholders left
15	1	207993	Screen for vertical belt
16	1	207994	Screen 2 for vertical belt
17	2	207995	Regulator for stretch assembly
18	1	207996	Base assembly 1
19	1	210183	Valve assembly
20	1	210184	Assembly VM10 valve for CC2010
21	1	210187	Filter assembly
22	1	215042	Valve 5/2 1/8" 24VDC/Spring
23	1	215184	Cable w. elbow plug 22mm 3P 3M 250v
24	1	215405	Valve, shuttle 1/8"
25	5	215760	Elbow swirvel Ø6 x 1/8"
26	1	215925	Straight connector Ø6 x 1/8"
27	15,0 m	216104	Air hose Ø4mm PUR Red
28	15,0 m	216106	Air hose Ø4mm PUR Blue
29	46,5 m	216116	Air hose Ø6mm PUR Red
30	32,0 m	216118	Air hose Ø6mm PUR Blue
31	10,0 m	216124	Air hose Ø8mm PUR Blue
32	2,0 m	216126	Air hose Ø10mm PUR White
33	2	216796	Filter sintered 1/8”
34	1	30381	Assembly curve for pawholder
35	1	30382	Assembly curve for pawholder
36	1	30545	Bracket for sensor, pawstretch
37	1	30562	Bracket for sensor
38	2	30786	Bracket for right cover
39	1	30822	bracket for energichain
40	4,0 m	600595	Spiral pipe SPS25
41	0,4 m	600600	Spiral pipe SPS35
42	3	600660	Sensor M8 inductive PNP No 2,5mm 5m cable
43	4	82104000	Washer M4 FZB
44	12	82105900	Washer M5 FZB
45	7	82106000	Washer M6 FZB
46	13	82108000	Washer M8 FZB
47	1	M102016	Air connection unit CC & QC 2016
48	1	M102713	Pawsystem 2010, right side jam
49	1	M102714	Pawsystem 2010 left side jam

Break all edges

Revision:	Approved	Date:	Revision Description
2	MBO	18-05-2017	Pawsystem changed

This drawing is strictly confidential and the property of HEDENSTED GRUPPEN A/S

HEDENSTED GRUPPEN

Scale: 1: 6	Not specified tolerance according to: DS/ISO 2768-m	Sheet size: A2
	Surface properties: No	Sheet: 1 /4
Part No.: 207999	Material:	
Description 1: Base assembly 2 for Combi Cut 2010		
Description 2:		

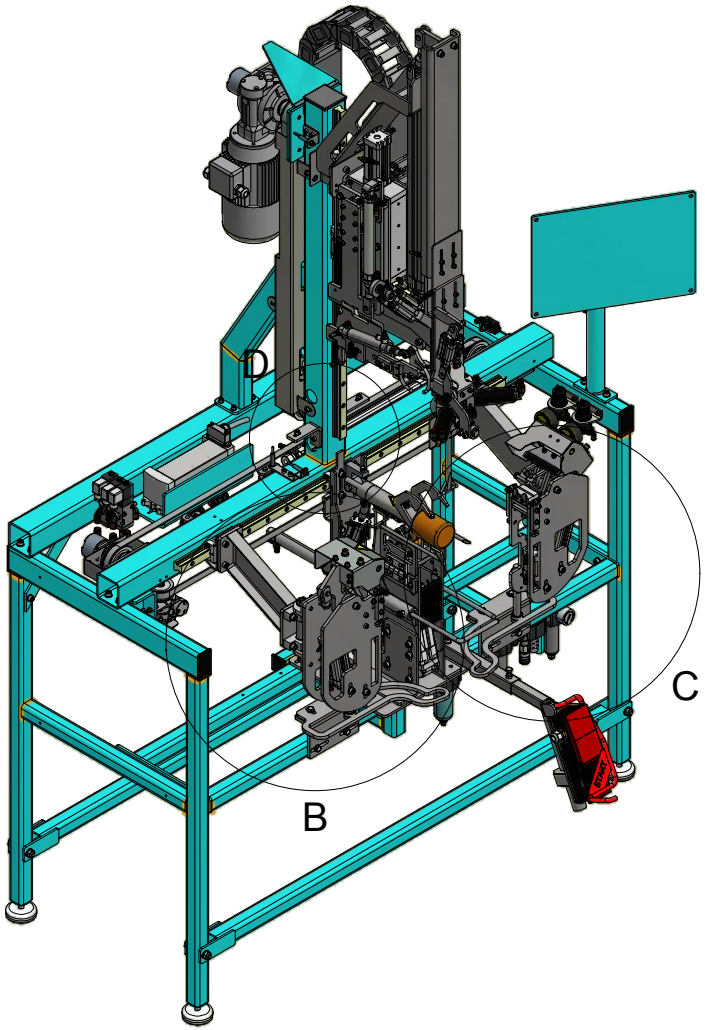

D (1 : 3)

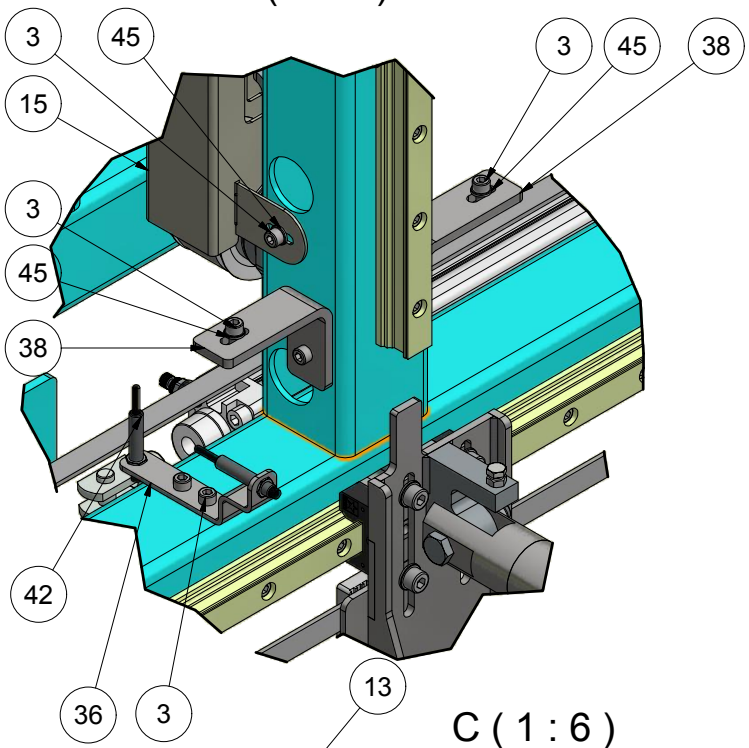

C (1 : 6)

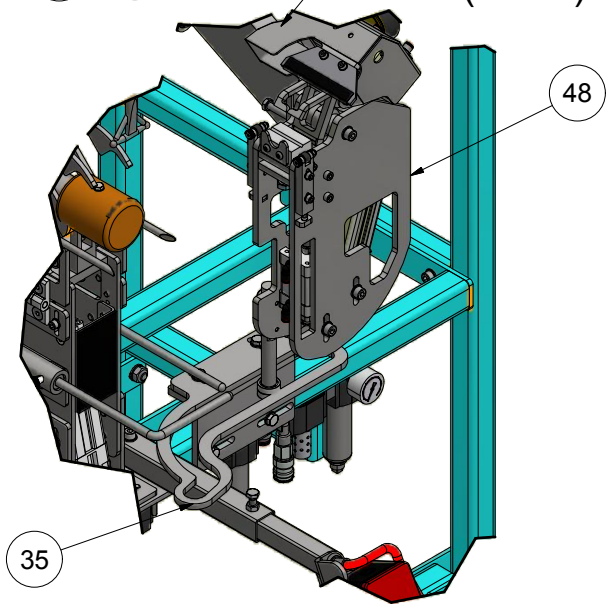

B (1 : 6)

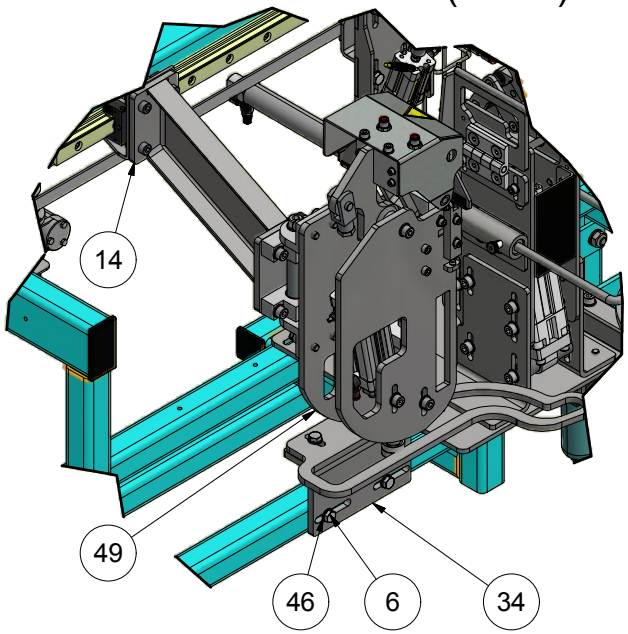

Break all edges

Revision:	Approved	Date:	Revision Description
2	MBO	18-05-2017	Pawsystem changed

The document is property of HEDENSTED GRUPPEN A/S and may not be copied or discloses to any third person.

HEDENSTED GRUPPEN

Scale: 1: 6	Not specificed tolerance according to: DS/ISO 2768-m		Sheet size: A3
	Surface properties: No		Sheet: 2 /4
Part No.: 207999	Material:		
Description 1: Base assembly 2 for Combi Cut 2010			
Description 2:			

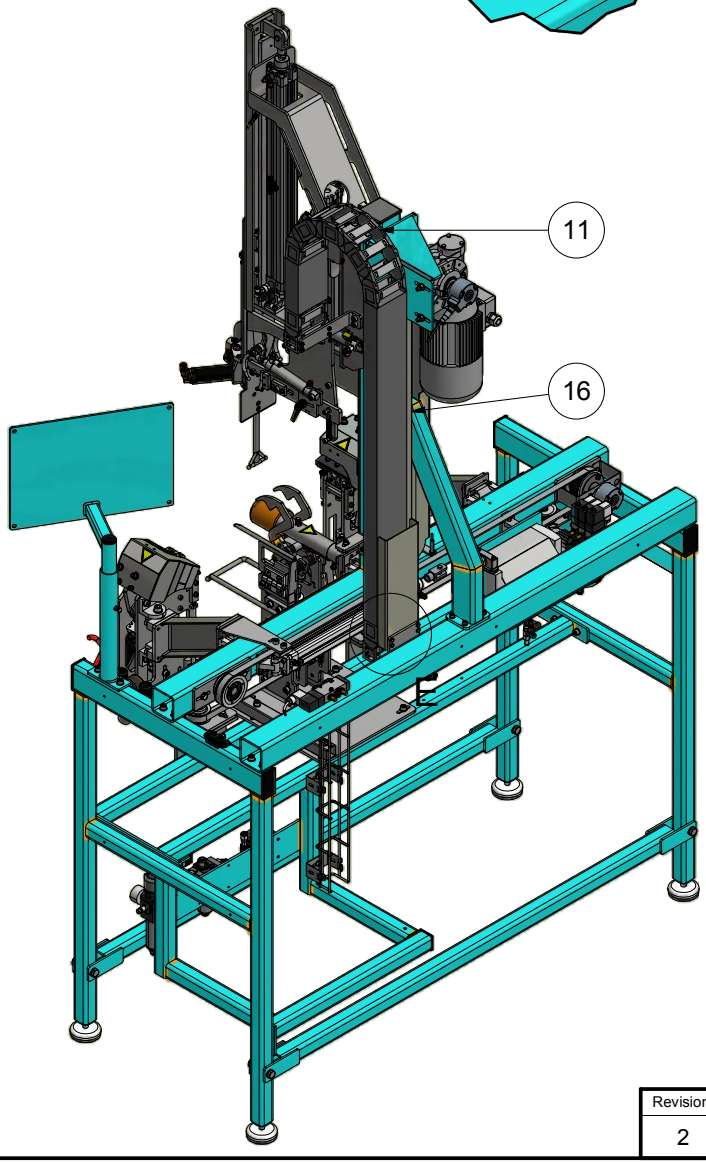

E (1 : 3)

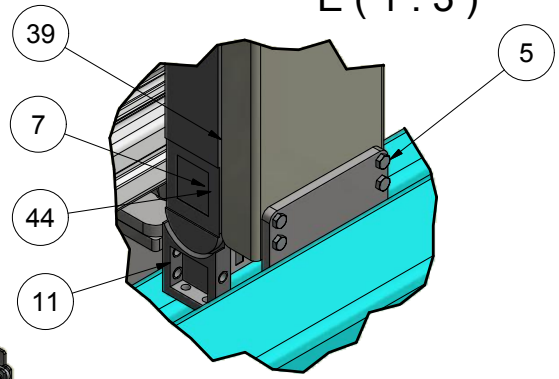

H (1 : 3)

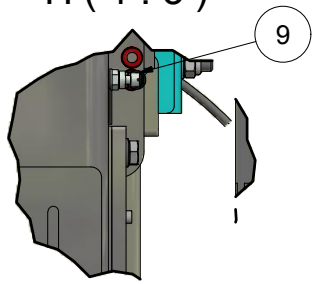

J (1 : 5)

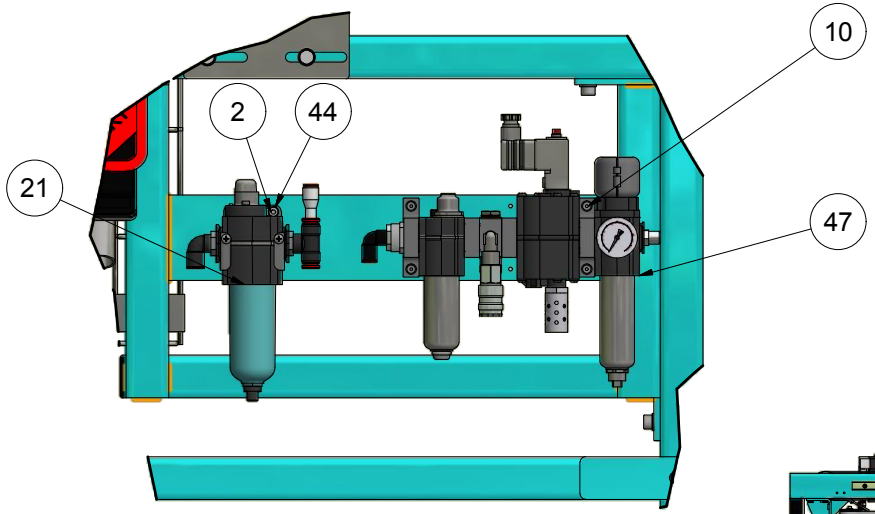

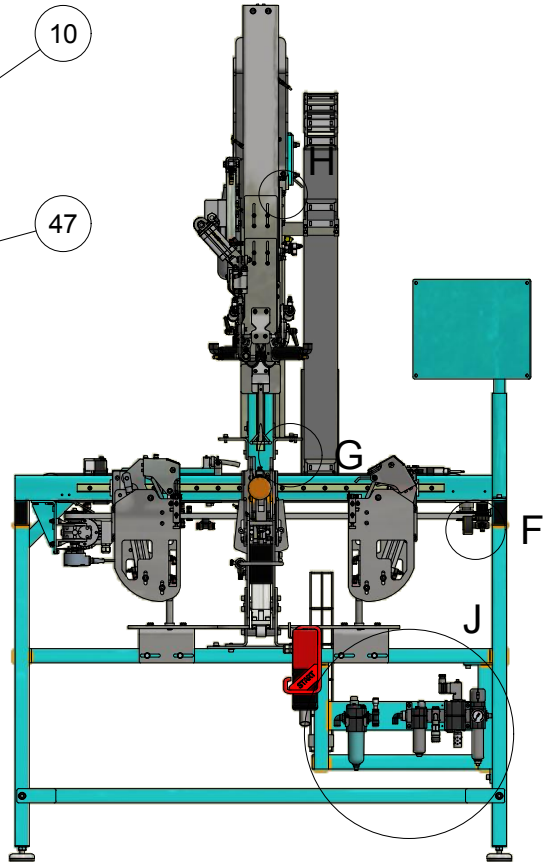

G (1 : 3)

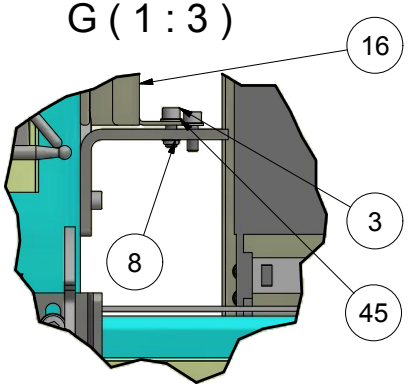

F (1 : 3)

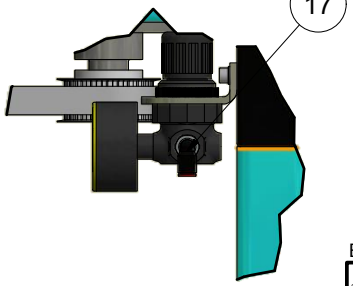

Break all edges

Revision:	Approved	Date:	Revision Description
2	MBO	18-05-2017	Pawsystem changed

The document is strictly confidential and may in no account be copied or discloses to any third person HEDENSTED GRUPPEN A/S

HEDENSTED GRUPPEN

Scale: 1: 6	Not specificed tolerance according to: DS/ISO 2768-m		Sheet size: A3
	Surface properties: No		Sheet: 3 /4
Part No.: 207999	Material:		
Description 1: Base assembly 2 for Combi Cut 2010			
Description 2:			

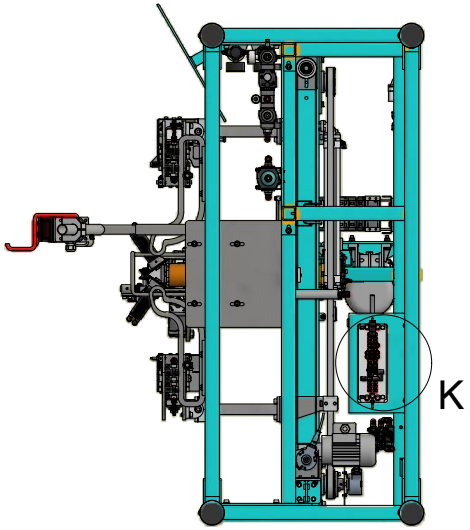

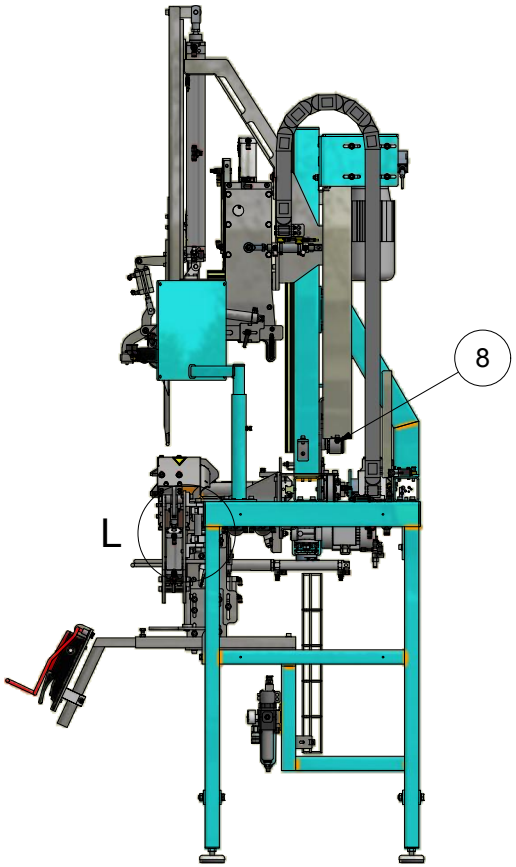

L (1 : 3)

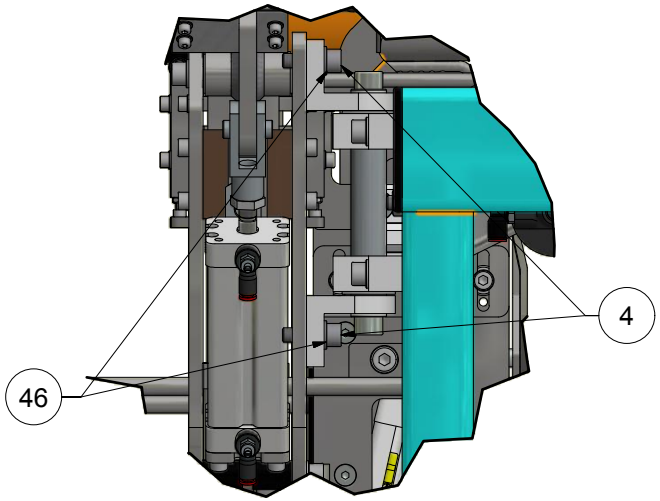

K (1 : 3)

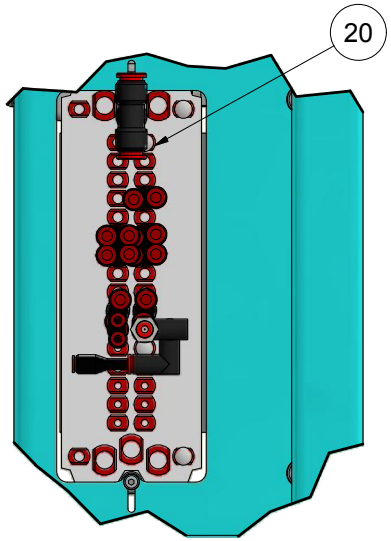

Revision:	Approved	Date:	Revision Description
2	MBO	18-05-2017	Pawsystem changed

Break all edges

The document is strictly confidential and may in no account be copied or discloses to any third person.

HEDENSTED GRUPPEN A/S

Scale: 1: 6	Not specificed tolerance according to: DS/ISO 2768-m		Sheet size: A3
	Surface properties: No		Sheet: 4 /4
Part No.: 207999	Material:		
Description 1: Base assembly 2 for Combi Cut 2010			
Description 2:			

Parts List				Parts List			
ITEM	QTY	PART NUMBER	DESCRIPTION	ITEM	QTY	PART NUMBER	DESCRIPTION
1	2	10208020	Hexagon cylinder head M8x20FZB	9	1	30335	Right arm for pawholder
2	4	10208025	Hexagon cylinder head M8x25 FZB	10	2	30400	Hinge for pawlock
3	4	10208030	Hexagon cylinder head M8x30 FZB	11	1	30410	Shaft for hinge - pawholder
4	2	10210020	Hexagon cylinder head M10x20 FZB	12	2	30420	Hinge for pawlock part f. arm
5	1	11408060	Hexagon bolt M8x60 FZB	13	1	30595	Bracket for pull - belt
6	1	1508000	Nut M8 FZB	14	1	30598	Clamping plate for AT5
7	2	207845	Slide bushing Ø20xØ23x20	15	4	82108000	Washer M8 FZB
8	1	222300	Ball runner block s.25 wide	16	2	82110000	Washer M10 FZB

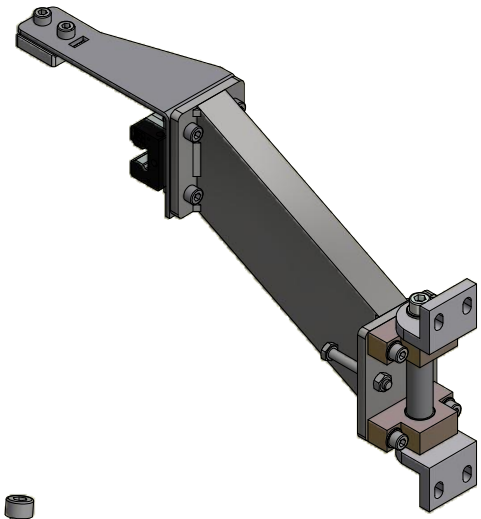

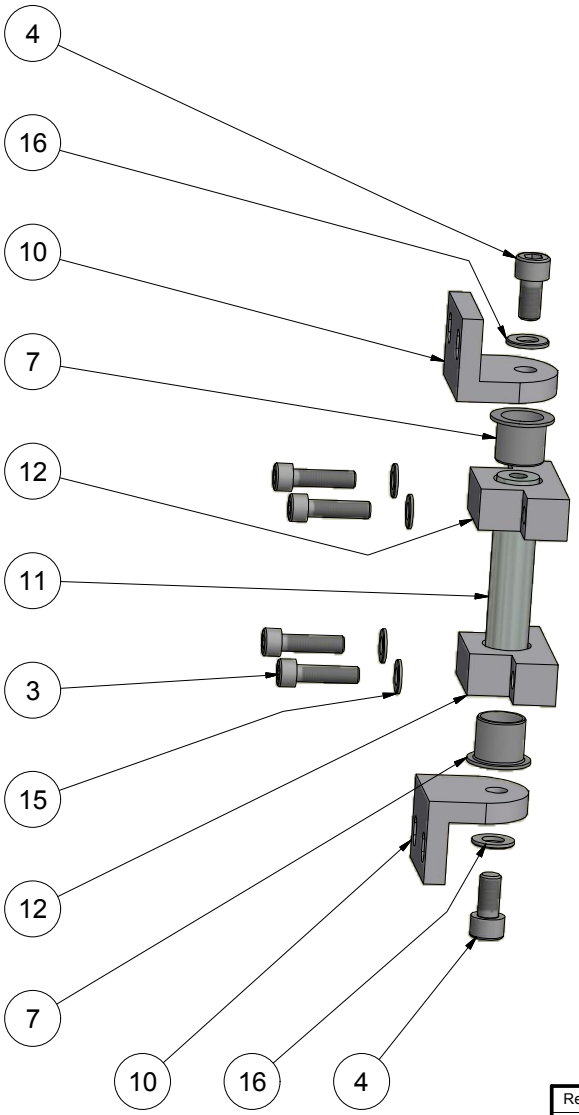

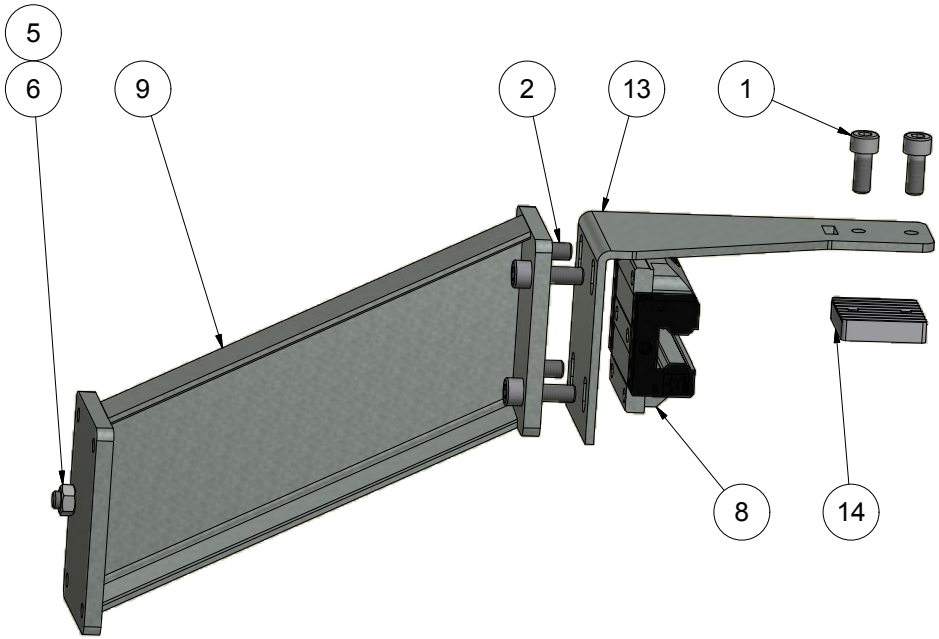

Break all edges

Revision:	Approved	Date:	Revision Description
1	HG	27-09-2015	Revision changed to numeric

The document is strictly confidential and may not be in no account be copied or discloses to any third person.
HEDENSTED GRUPPEN A/S

HEDENSTED GRUPPEN

Scale: 1 : 4	Not specificed tolerance according to: DS/ISO 2768-m		Sheet size: A3
	Surface properties:		Sheet: 1 /2
Part No.: 207962	Material:		
Description 1: Assembly arm-pull pawholder			
Description 2:			

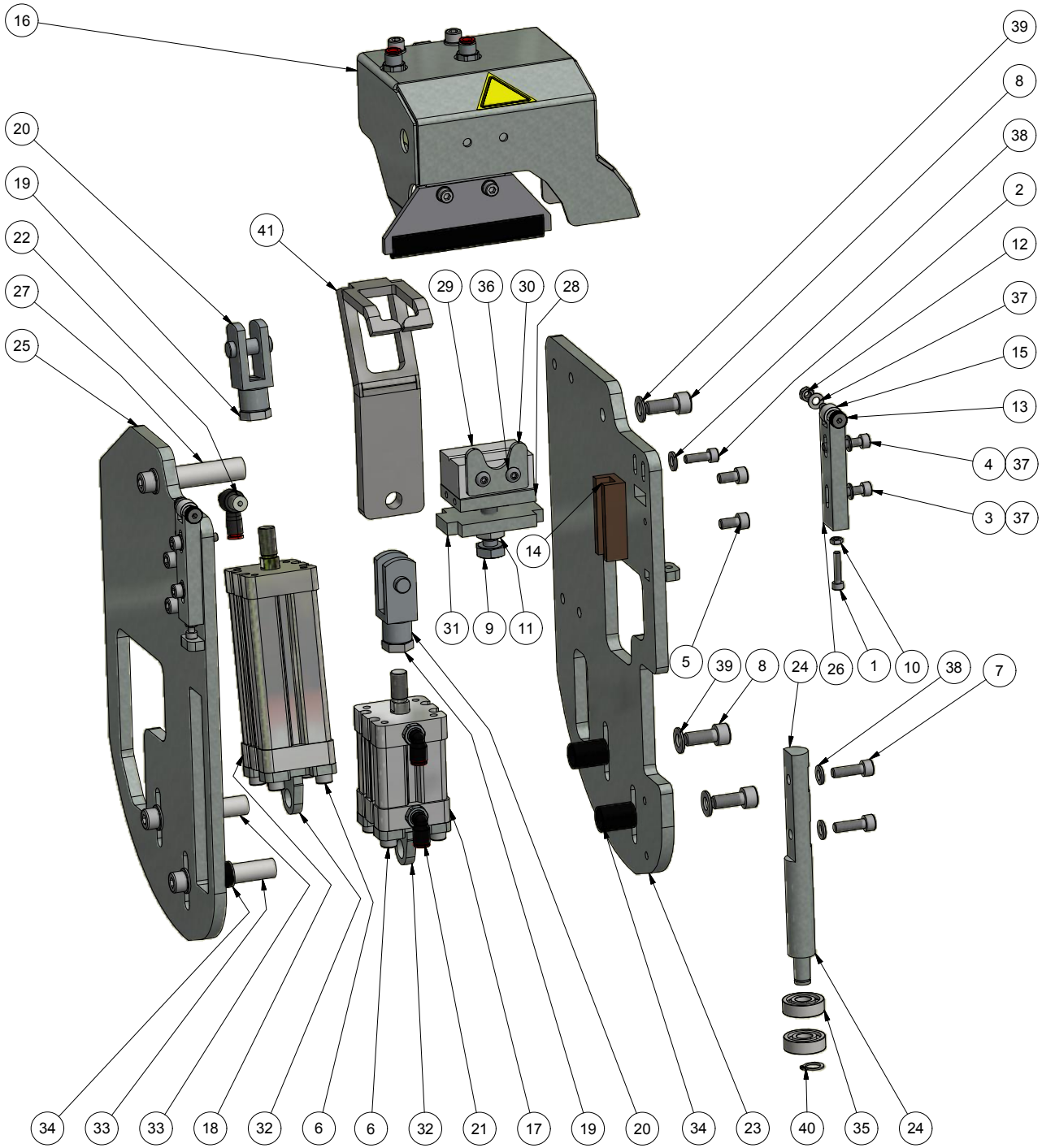

Parts List

ITEM	QTY	PART NUMBER	DESCRIPTION
1	2	10204020	Hexagon cylinder head M4x20 FZB
2	4	10205016	Hexagon cylinder head M5x16 FZB
3	2	10205020	Hexagon cylinder head M5x20 FZB
4	2	10205025	Hexagon cylinder head M5x25 FZB
5	4	10206012	Hexagon cylinder head M6x12 FZB
6	8	10206016	Hexagon cylinder head M6x16 FZB
7	2	10206020	Hexagon cylinder head M6x20 FZB
8	6	10208020	Hexagon cylinder head M8x20FZB
9	1	11410030	Hexagon bolt M10x30 FZB
10	2	1504000	Nut M4 FZB
11	1	1510000	Nut M10 FZB
12	2	17905000	Self-locking nut M5 FZB
13	2	20205016	Fitting bolt M5-6x16
14	2	207865	Bearing for pawgrib
15	2	207948	Roller for paw cut w. bushing
16	1	207969	Pawcut system left 2010
17	1	210320	Cylinder RA/192032/M/25
18	1	210340	Cylinder RA/192032/M/80
19	2	210427	Lock nut M10x1,25 FZB
20	2	214115	F-Bracket QM/8025/25
21	2	215760	Elbow swirvel Ø6 x 1/8"
22	2	215985	Flow control banjo Ø4 x 1/8"
23	1	30356	Assembly back plate for
24	1	30375	Shaft for turning, pawsystem
25	1	30396	Assembly, front plate for
26	2	30455	Bracket for stop, pawknife
27	1	30566	Shaft for turning
28	1	30570	Plate for mounting pawgrib
29	1	30575	Block for pawgrib
30	1	30576	Bracket for pawposition
31	1	30580	Adjustmentplate for pawgrib
32	2	30641	Assembly bracket f.
33	2	30642	Shaft for cylinders
34	4	30643	Spacer 12,2 x 21,8
35	2	473013	Bearing Ø10xØ26x8
36	2	76005012	Buttonhead bolt M5x12 FZB
37	6	82105900	Washer M5 FZB
38	4	82106000	Washer M6 FZB
39	6	82108000	Washer M8 FZB
40	1	89710000	Seeger ring for shaft Ø10
41	1	M102712	Paw Clamp Assembly

Break all edges

Revision:	Approved	Date:	Revision Description
1	MBO	18-05-2017	Made

This document is property of HEDENSTED GRUPPEN A/S and may not be copied or disclosed to any third person without their consent.

HEDENSTED GRUPPEN

Scale: 1 : 2,7

Not specificed tolerance according to:

Surface properties:

Sheet size: A3

Sheet: 1 /3

Part No.: M102714

Material:

Description 1: Pawsystem 2010 left side jam

Description 2:

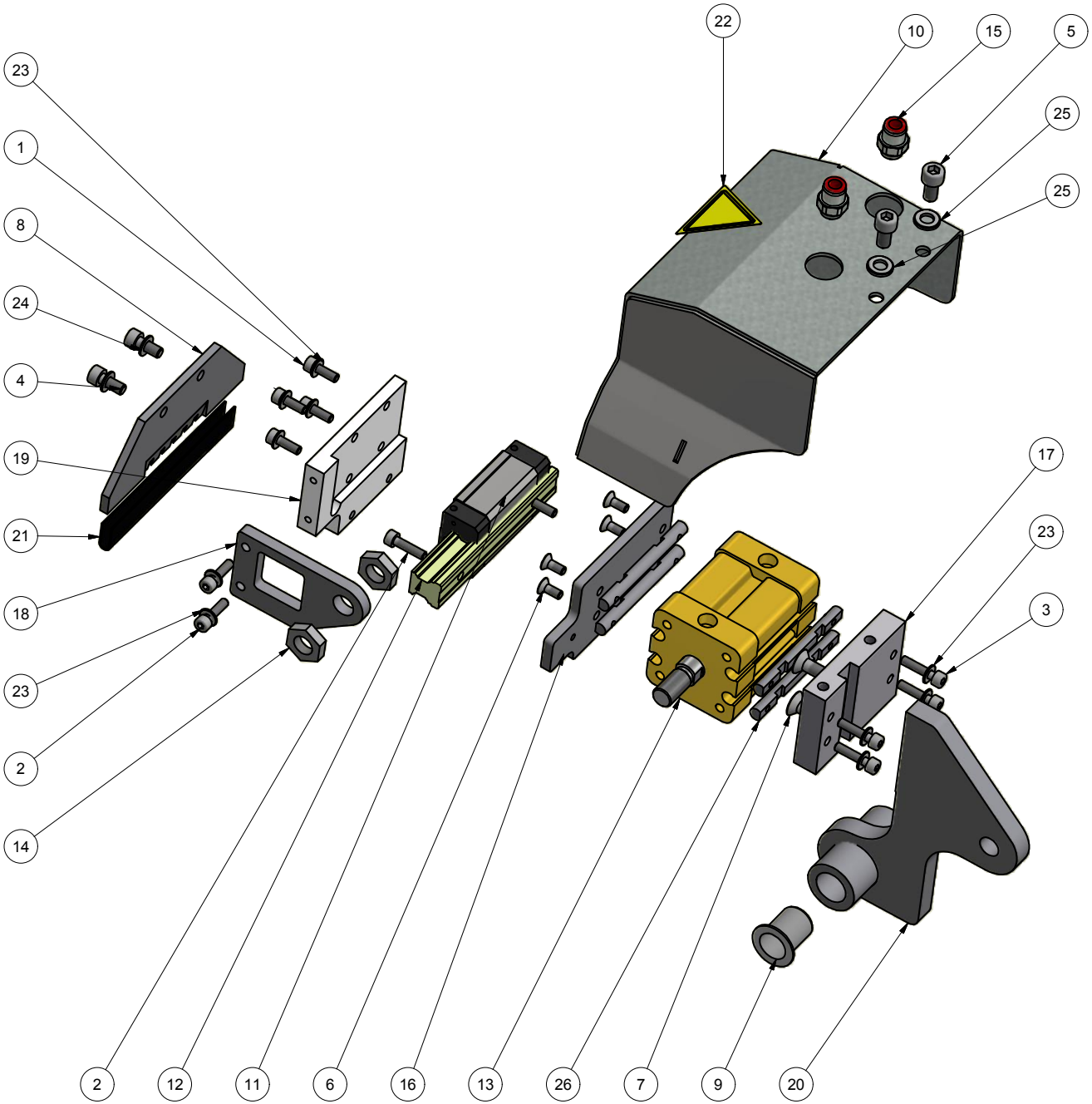

Parts List			
ITEM	QTY	PART NUMBER	DESCRIPTION
1	4	10204012	Hexagon cylinder head M4x12 FZB
2	4	10204016	Hexagon cylinder head M4x16 FZB
3	4	10204018	Hexagon cylinder head M4x18 FZB
4	2	10205012	Hexagon cylinder head M5x12 FZB
5	2	10206012	Hexagon cylinder head M6x12 FZB
6	4	20404010	Hexagon countersunk head M4x10 FZB
7	2	20406020	Hexagon countersunk head M6x20 FZB
8	1	207825	Paw knife CC HSS110/62-40-4mm
9	2	207840	Slide bushing Ø14xØ16x20
10	1	207976	Left Screen for paw blow
11	1	207982	Ball runner block s.15 long
12	1	207984	Ball guide rail s.15/95mm
13	1	210330	Cylinder RA/192032/M/20
14	2	210427	Lock nut M10x1,25 FZB
15	2	215925	Straight connector Ø6 x 1/8"
16	1	30237	Mountingplate for left
17	1	30238	Top for console, pawknife
18	1	30250	Bracket for pawknife
19	1	30285	Mountingpiece for left
20	1	30323	Assembly, branch for turning
21	1	30979	Protection strip for pawknife
22	1	31004	Warning Sign knives
23	10	82104000	Washer M4 FZB
24	2	82105900	Washer M5 FZB
25	2	82106000	Washer M6 FZB
26	4	M100889	Groove nut 6,5 x 64 - M4

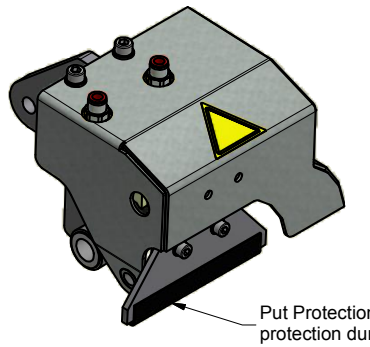

Break all edges

Break all edges

Revision:	Approved	Date:	Revision Description
1	KL	19-12-2016	2x M6x12 changed to M6x20

The document is strictly confidential and may in no account be copied or discloses to any third person.
HEDENSTED GRUPPEN A/S

HEDENSTED GRUPPEN

Scale: 1 : 2	Not specificed tolerance according to: DS/ISO 2768-m		Sheet size: A3
	Surface properties:		Sheet: 1 /2
Part No.: 207969	Material:		
Description 1: Pawcut system left 2010			
Description 2:			

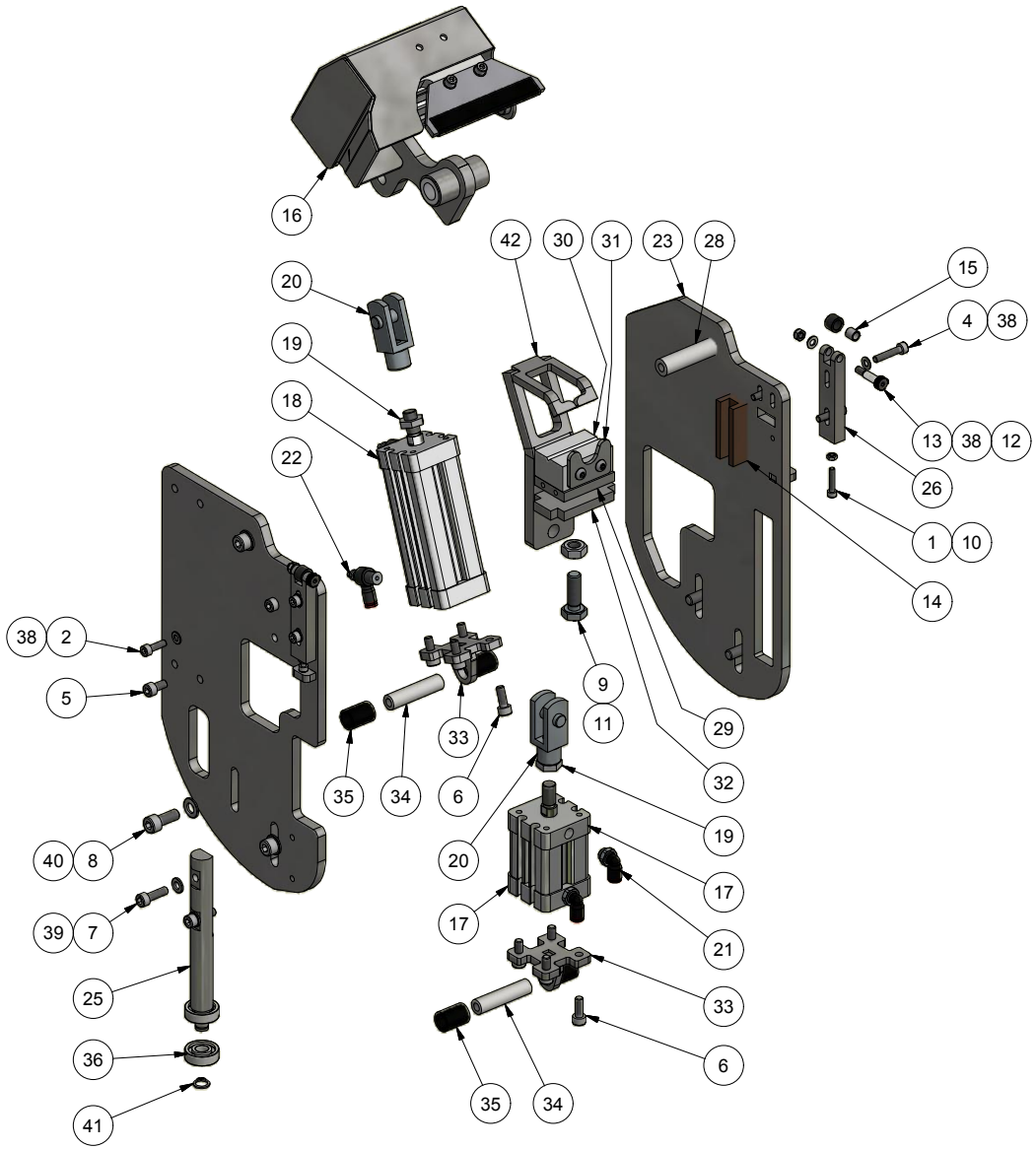

Parts List

ITEM	QTY	PART NUMBER	DESCRIPTION
1	2	10204020	Hexagon cylinder head M4x20 FZB
2	4	10205016	Hexagon cylinder head M5x16 FZB
3	2	10205020	Hexagon cylinder head M5x20 FZB
4	2	10205025	Hexagon cylinder head M5x25 FZB
5	4	10206012	Hexagon cylinder head M6x12 FZB
6	8	10206016	Hexagon cylinder head M6x16 FZB
7	2	10206020	Hexagon cylinder head M6x20 FZB
8	6	10208020	Hexagon cylinder head M8x20FZB
9	1	11410030	Hexagon bolt M10x30 FZB
10	2	1504000	Nut M4 FZB
11	1	1510000	Nut M10 FZB
12	2	17905000	Self-locking nut M5 FZB
13	2	20205016	Fitting bolt M5-6x16
14	2	207865	Bearing for pawgrib
15	2	207948	Roller for paw cut w. bushing
16	1	207973	Pawcut system 2010 - right
17	1	210320	Cylinder RA/192032/M/25
18	1	210340	Cylinder RA/192032/M/80
19	2	210427	Lock nut M10x1,25 FZB
20	2	214115	F-Bracket QM/8025/25
21	2	215760	Elbow swirvel Ø6 x 1/8"
22	2	215985	Flow control banjo Ø4 x 1/8"
23	1	30232	Assembly front plate for
24	1	30233	Assembly back plate for
25	1	30375	Shaft for turning, pawsystem
26	2	30455	Bracket for stop, pawknife
28	1	30566	Shaft for turning
29	1	30570	Plate for mounting pawgrib
30	1	30575	Block for pawgrib
31	1	30576	Bracket for pawposition
32	1	30580	Adjustmentplate for pawgrib
33	2	30641	Assembly bracket f.
34	2	30642	Shaft for cylinders
35	4	30643	Spacer 12,2 x 21,8
36	2	473013	Bearing Ø10xØ26x8
37	2	76005012	Buttonhead bolt M5x12 FZB
38	8	82105900	Washer M5 FZB
39	2	82106000	Washer M6 FZB
40	6	82108000	Washer M8 FZB
41	1	89710000	Seeger ring for shaft Ø10
42	1	M102712	Paw Clamp Assembly

Break all edges

Revision:	Approved	Date:	Revision Description
1	MBO	18-05-2017	Made

This document is strictly confidential and may not account be copied or disclosed to any third person.
HEDENSTED GRUPPEN A/S

HEDENSTED GRUPPEN

Scale: 1:4

Not specificed tolerance according to:

Surface properties:

Sheet size: A3

Sheet: 1 /2

Part No.: M102713

Material:

Description 1: Pawsystem 2010, right side jam

Description 2:

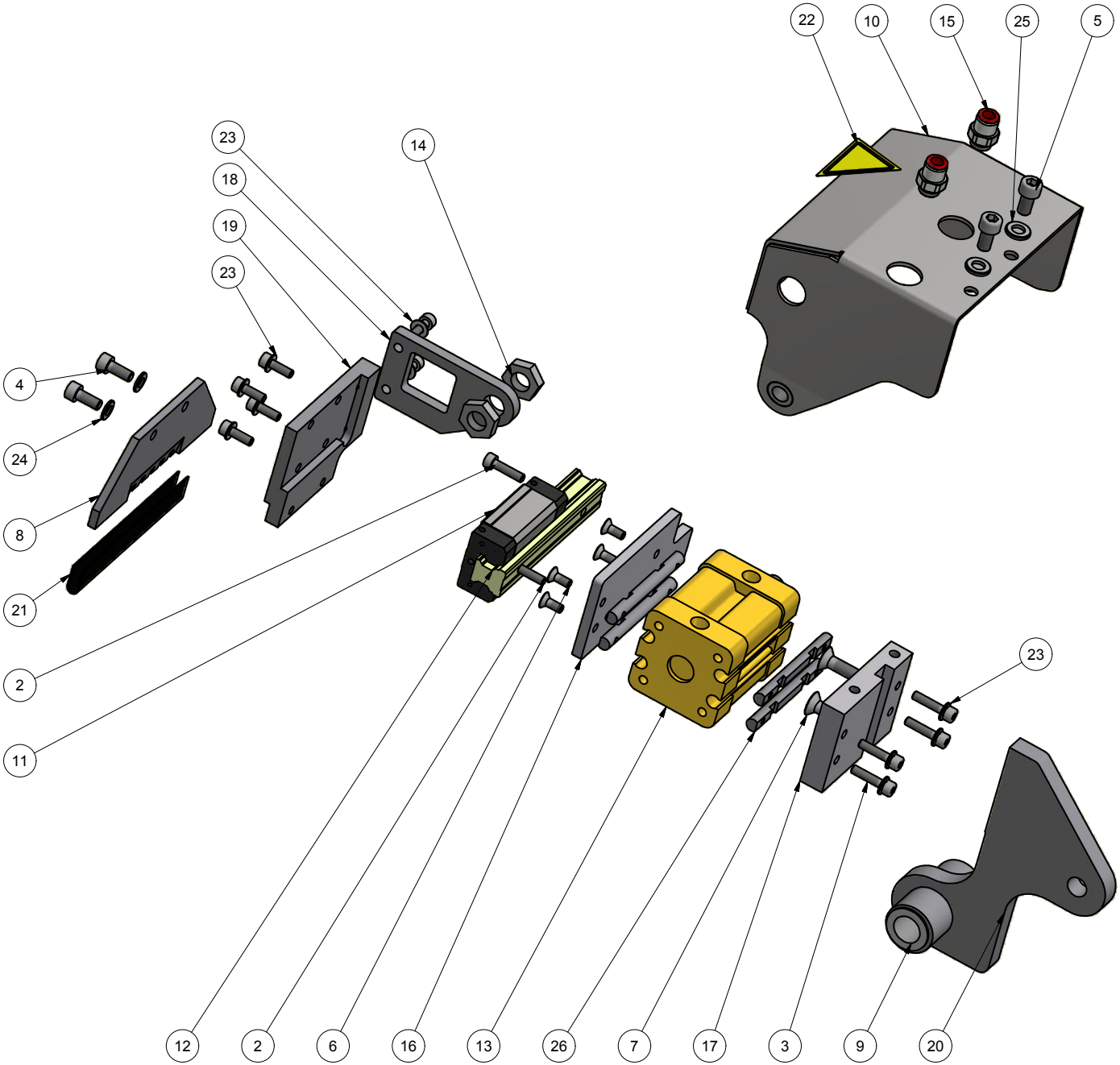

Parts List			
ITEM	QTY	PART NUMBER	DESCRIPTION
1	4	10204012	Hexagon cylinder head M4x12 FZB
2	4	10204016	Hexagon cylinder head M4x16 FZB
3	4	10204018	Hexagon cylinder head M4x18 FZB
4	2	10205012	Hexagon cylinder head M5x12 FZB
5	2	10206012	Hexagon cylinder head M6x12 FZB
6	4	20404010	Hexagon countersunk head M4x10 FZB
7	2	20406020	Hexagon countersunk head M6x20 FZB
8	1	207825	Paw knife CC HSS110/62-40-4mm
9	2	207840	Slide bushing Ø14xØ16x20
10	1	207974	Right Screen for paw blow
11	1	207982	Ball runner block s.15 long
12	1	207984	Ball guide rail s.15/95mm
13	1	210330	Cylinder RA/192032/M/20
14	2	210427	Lock nut M10x1,25 FZB
15	2	215925	Straight connector Ø6 x 1/8"
16	1	30231	Mountingplate for Right
17	1	30238	Top for console, pawknife
18	1	30250	Bracket for pawknife
19	1	30251	Mountingpiece, right pawknife
20	1	30323	Assembly, branch for turning
21	1	30979	Protection strip for pawknife
22	1	31004	Warning Sign knives
23	10	82104000	Washer M4 FZB
24	2	82105900	Washer M5 FZB
25	2	82106000	Washer M6 FZB
26	4	M100889	Groove nut 6,5 x 64 - M4

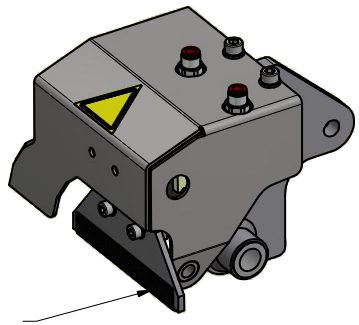

Put Protection strip for protection during asembling

Break all edges

Revision:	Approved	Date:	Revision Description
1	KL	19-12-2016	2x M6x12 changed to M6x20

The document is strictly confidential and may in no account be copied or disclosed to any third person HEDENSTED GRUPPEN A/S

HEDENSTED GRUPPEN

Scale: 1 : 2	Not specificed tolerance according to: DS/ISO 2768-m		Sheet size: A3
	Surface properties:		Sheet: 1 /2
Part No.: 207973	Material:		
Description 1: Pawcut system 2010 - right			
Description 2:			

Parts List			
ITEM	QTY	PART NUMBER	DESCRIPTION
11	1	30410	Shaft for hinge - pawholder
12	2	30420	Hinge for pawlock part f. arm
13	1	30593	Sensor plate for stretch
14	1	30594	Assembly pullbracket for
15	1	30598	Clamping plate for AT5
16	1	49605015	High Nut M5x15 FZB
17	4	82108000	Chamfered Washer M8 FZB
18	2	10210020	Hexagon cylinder head M10x20 FZB
19	2	82110000	Chamfered Washer M10 FZB

Parts List			
ITEM	QTY	PART NUMBER	DESCRIPTION
1	2	10208020	Hexagon cylinder head M8x20 FZB
2	4	10208025	Hexagon cylinder head M8x25 FZB
3	4	10208030	Hexagon cylinder head M8x30 FZB
4	1	11408060	Hexagon bolt M8x60 FZB
5	1	1508000	Nut M8 FZB
6	1	20405010	Hexagon countersunk head M5x10 FZB
7	2	207845	Slide Bearing GFM-2023-21
8	1	222300	Ball runner block size 25
9	1	30367	Left arm for pawholder
10	2	30400	Hinge for pawlock

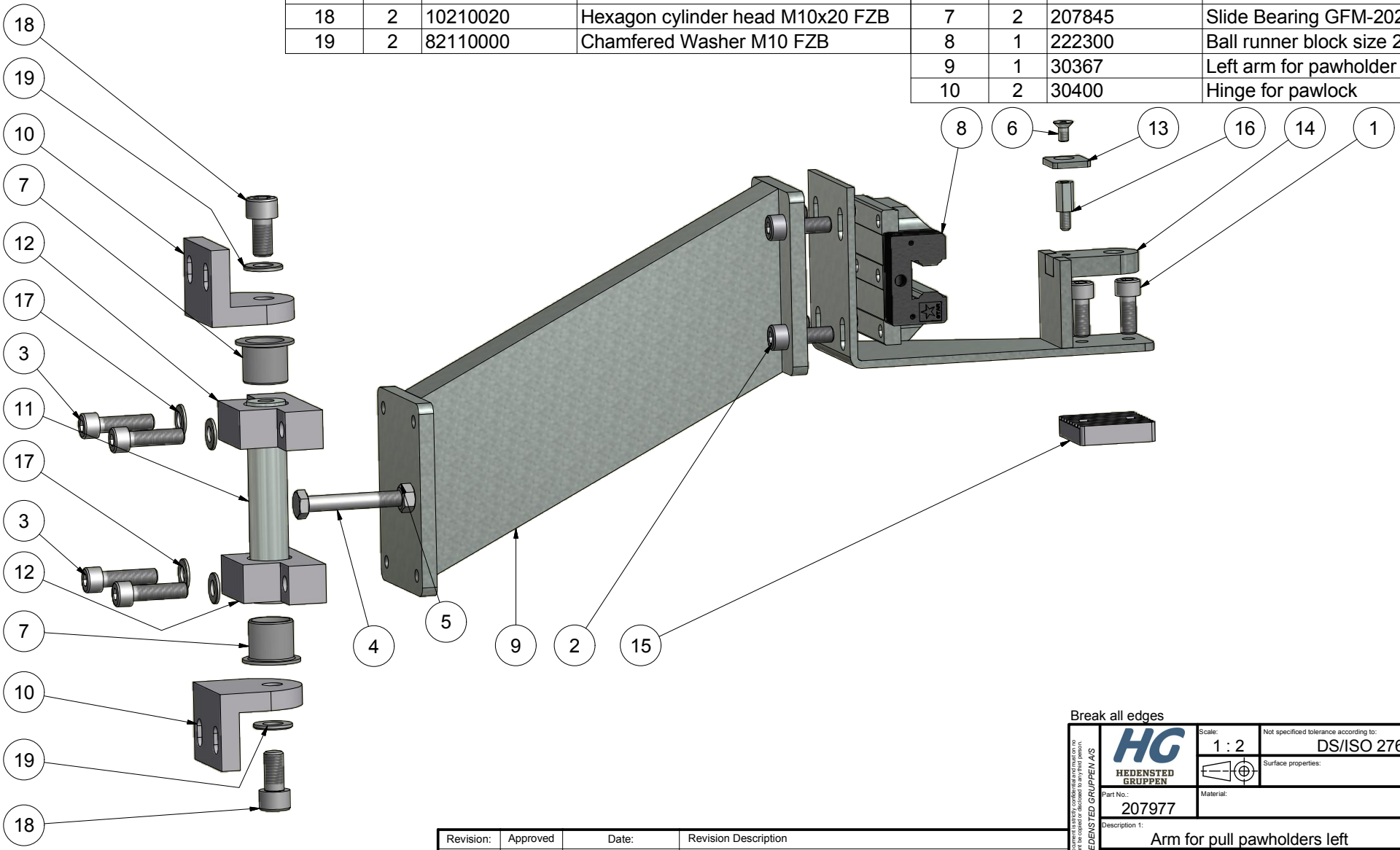

Break all edges

Revision:	Approved	Date:	Revision Description
1	HG	28-09-2015	Revision changed to numeric

The document is strictly confidential and may not in no account be copied or discloses to any third person.

HEDENSTED GRUPPEN

HEDENSTED GRUPPEN A/S

Scale: 1 : 2	Not specificed tolerance according to: DS/ISO 2768-m		Sheet size: A3
	Surface properties:		Sheet: 1 /2
Part No.: 207977	Material:		
Description 1: Arm for pull pawholders left			
Description 2:			

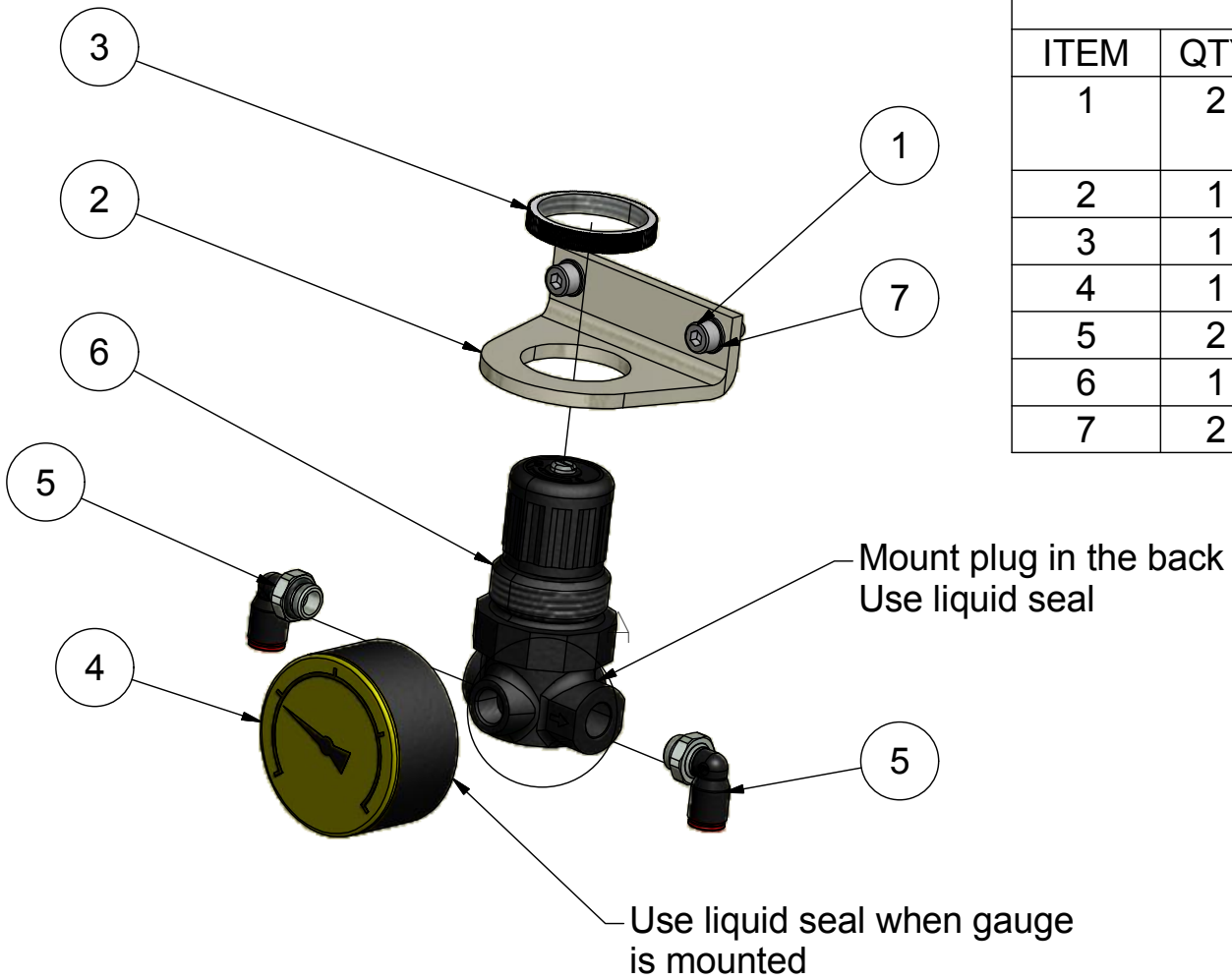

Parts List			
ITEM	QTY	PART NUMBER	DESCRIPTION
1	2	10205012	Hexagon cylinder head M5x12 FZB
2	1	214180	Mounting brace
3	1	215535	Panel mounting nut
4	1	215538	Gauge 0-4Bar 1/8" Ø50mm
5	2	215760	Elbow swirvel Ø6 x 1/8"
6	1	216205	Regulator 3,5 bar 1/8"
7	2	82105900	Chamfered Washer M5 FZB

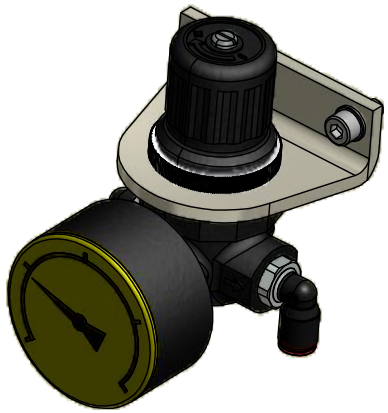

A (1 : 1)

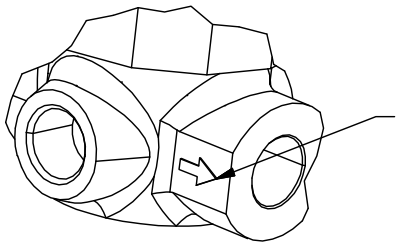

Break all edges

This document is strictly confidential and must on no account be copied or disclosed to any third person.
HEDENSTED GRUPPEN A/S

HG HEDENSTED GRUPPEN

Scale:	Not specified tolerance according to:	Sheet size:
1 : 2	DS/ISO 2768-m	A4
	Surface properties:	Sheet: 1 /1

Part No.: 207995

Material:

Description 1: Regulator for stretch assembly

Description 2: Combi cut

Revision:	Approved	Date:	Revision Description
1	HG	28-09-2015	Revision changed to numeric

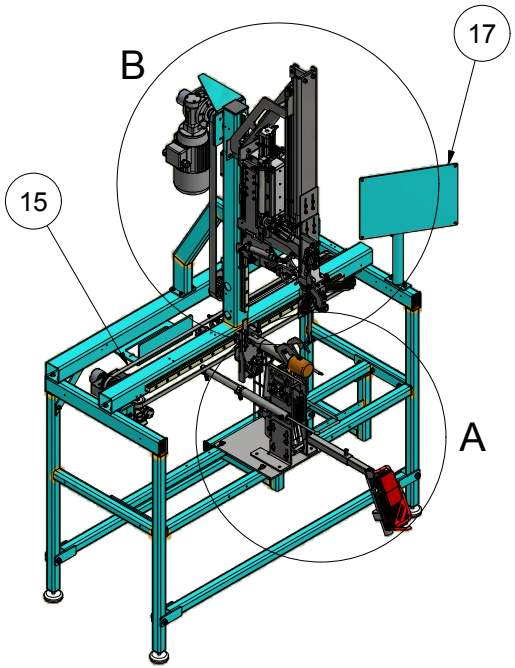

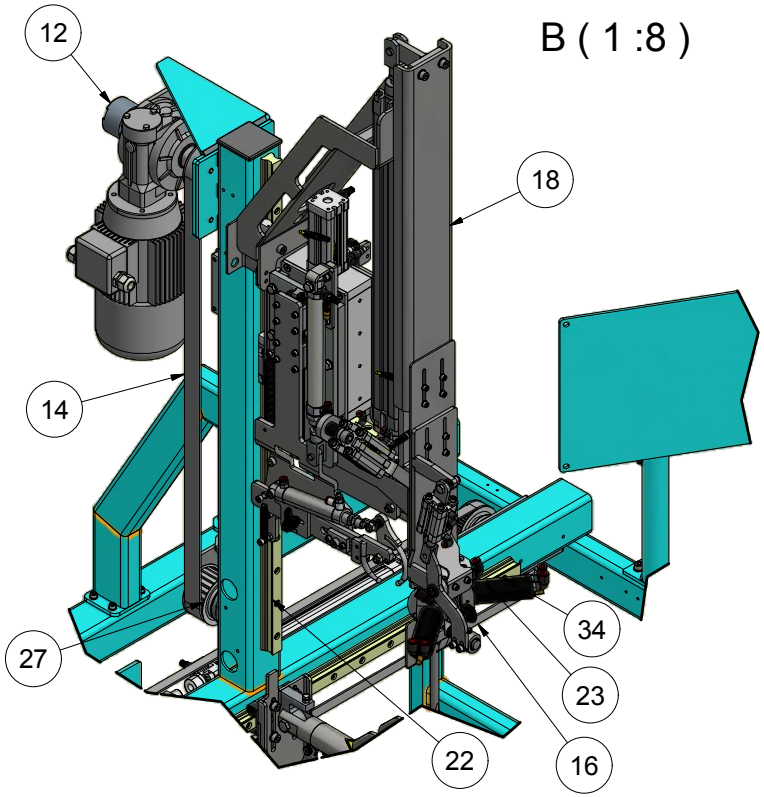

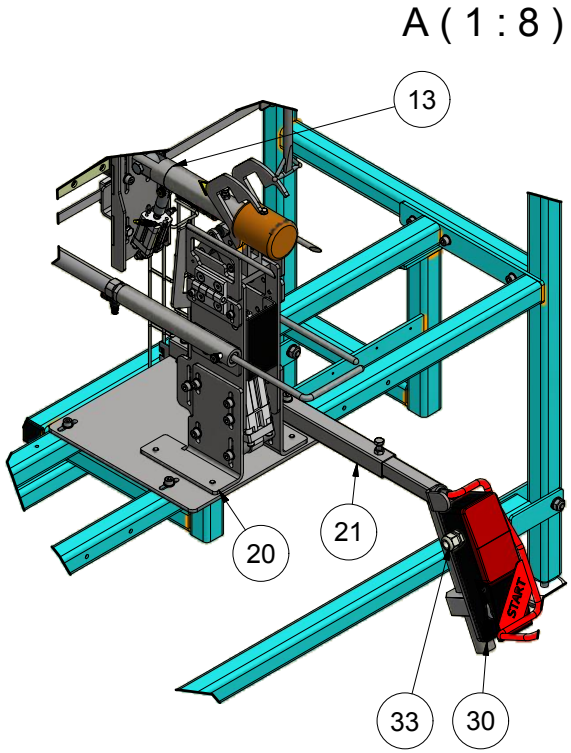

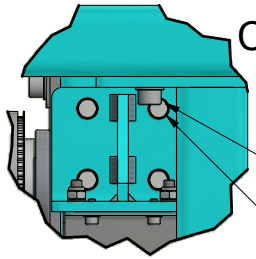

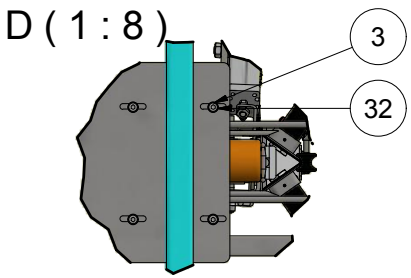

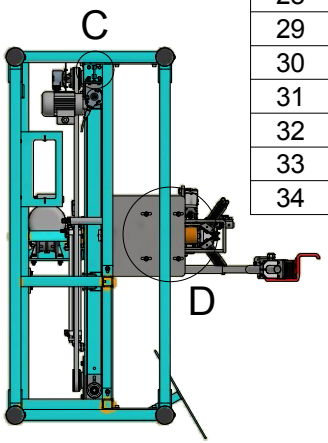

PARTS LIST

ITEM	QTY	PART NUMBER	DESCRIPTION
1	4	10204012	Hexagon cylinder head M4x12 FZB
2	4	10206012	Hexagon cylinder head M6x12 FZB
3	6	10208016	Hexagon cylinder head M8x16 FZB
4	2	10208050	Hexagon cylinder head M8x50 FZB
5	4	11406012	Hexagon bolt M6x12 FZB
6	4	11408016	Hexagon bolt M8x16 FZB
7	2	11408025	Hexagon bolt M8x25 FZB
8	4	11408035	Hexagon bolt M8x35 FZB
9	1	11408075	Hexagon bolt M8x75 FZB
10	2	1508000	Nut M8 FZB
11	7	17908000	Self-locking nut M8 FZB
12	1	207852	Gear for tower
13	1	207862	Assembly crosscut knife 2010
14	1	207921	Tooth belt 32AT10/1800 (endless)
15	1	207922	Tooth belt 16AT5/2500 (endless)
16	1	207923	Tooth belt 16AT5/2360 (endless)
17	1	207939	Assembly frame combi cut M2010
18	1	207943	Assembly tower 2010
19	1	207959	Gear for crossent knife 2010
20	1	207967	Assembly complete body holder
21	1	207979	Plate f/knee pedal complet2010
22	1	207987	Ball guide rail s.25/900mm
23	1	207988	Ball guide rail s.25/1030mm
24	1	210179	Cylinder for paw stretch
25	1	30262	Assembly AT5 pulley
26	1	30263	Assembly pulley AT5
27	1	30270	Assembly AT10 pulley
28	1	30586	Assembly AT5 -32 pulley
29	1	30821	Bracket for energichain. rack
30	1	600005	Foot pedal with emergency stop
31	4	82106000	Washer M6 FZB
32	26	82108000	Washer M8 FZB
33	1	600455	Cabel gland M20 Ø5-12
34	32	10206020	Hexagon cylinder head M6x20 FZB

Revision:	Approved	Date:	Revision Description
2	MBO	18-05-2017	207949 changed

Break all edges

The document is strictly confidential and may not be in no account be copied or discloses to any third person HEDENSTED GRUPPEN A/S

HEDENSTED GRUPPEN

Scale: 1 : 20	Not specificed tolerance according to: DS/ISO 2768-m		Sheet size: A3
	Surface properties: No		Sheet: 1 /2
Part No.: 207996	Material:		
Description 1: Base assembly 1			
Description 2: Combi cut			

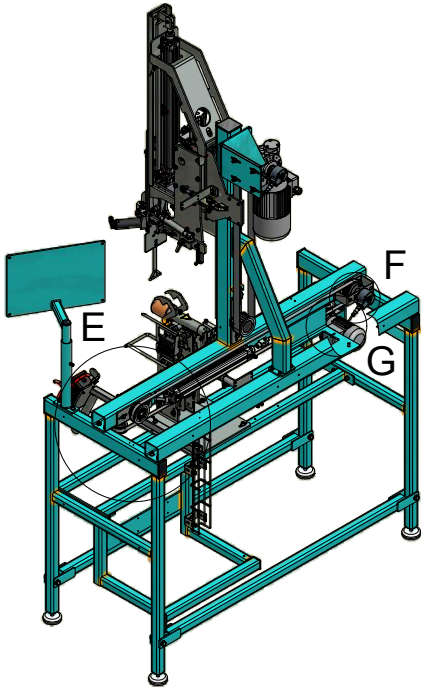

G (1 : 3)

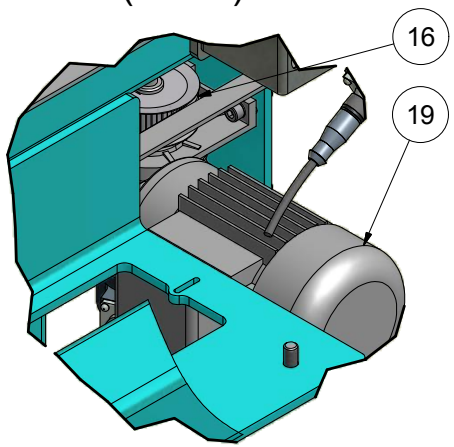

H (1 : 3)

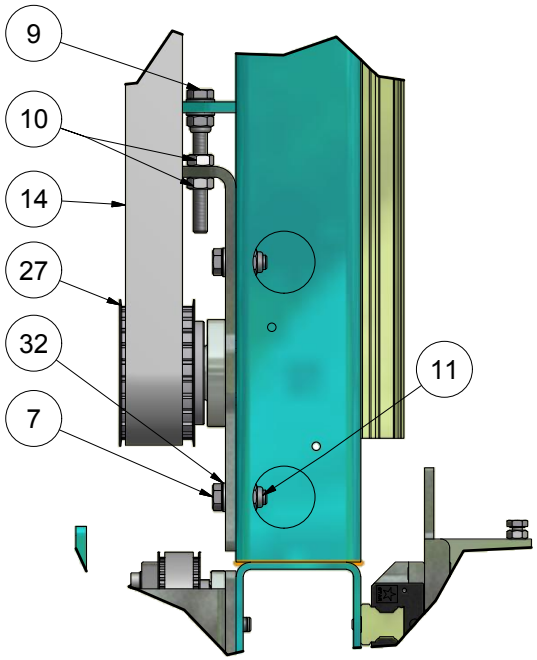

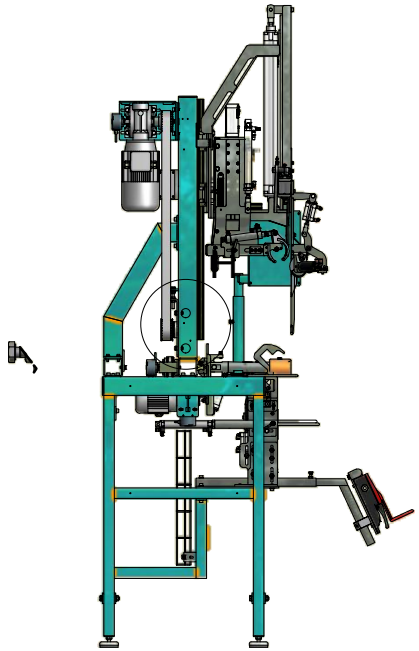

E (1 : 5)

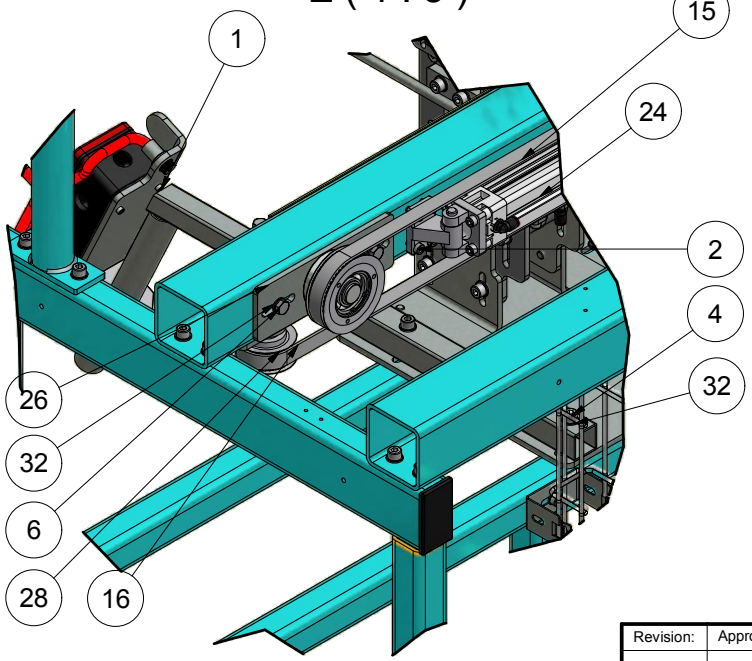

F (1 : 3)

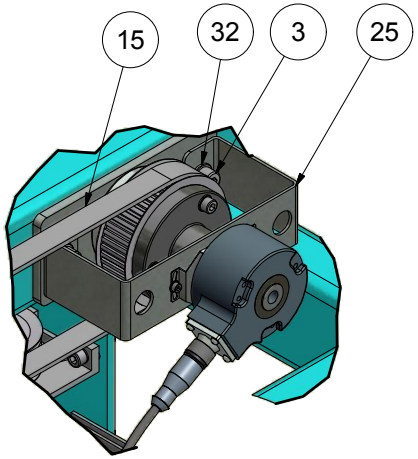

J (1 : 4)

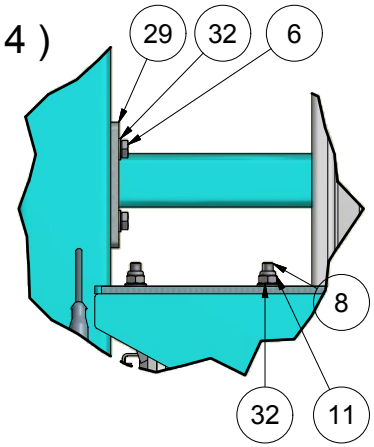

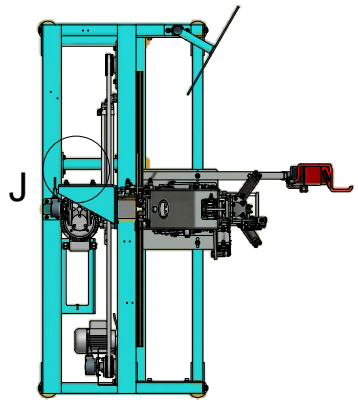

Break all edges

Revision:	Approved	Date:	Revision Description
2	MBO	18-05-2017	207949 changed

The document is strictly confidential and may in no account be copied or discloses to any third person.
HEDENSTED GRUPPEN A/S

HEDENSTED GRUPPEN

Scale: 1 : 20	Not specificed tolerance according to: DS/ISO 2768-m		Sheet size: A3
	Surface properties: No		Sheet: 2 /2
Part No.: 207996	Material:		
Description 1: Base assembly 1			
Description 2: Combi cut			

Parts List			
ITEM	QTY	PART NUMBER	DESCRIPTION
1	2	10203008	Hexagon cylinder head M3x08 FZB
2	1	11408016	Hexagon bolt M8x16 FZB
3	1	207902	Gearmotor high eff. w. brake
4	2	207947	Key 8x7x32mm DIN-6885A
5	1	207956	Encoder Type 8.5020.C922.0500
6	1	207957	Cable with plug 5 mtr
7	1	20905010	Stop screw M5-10 FZB
8	1	30171	Shaft for encoder
9	2	30172	Bracket for encoder
10	1	30266	Pulley AT10 Z24 - gear side
11	1	30267	Spacer for large gear
12	1	30775	Shaft for large gearmotor
13	1	30776	Nut for large gearmotor
14	1	4809335	Washer type SRKB ø9x35x3
15	1	4814335	Washer Type SRKB ø14x35x3
16	2	600455	Cabel gland M20 Ø5-12
17	2	82103000	Chamfered Washer M3 FZB

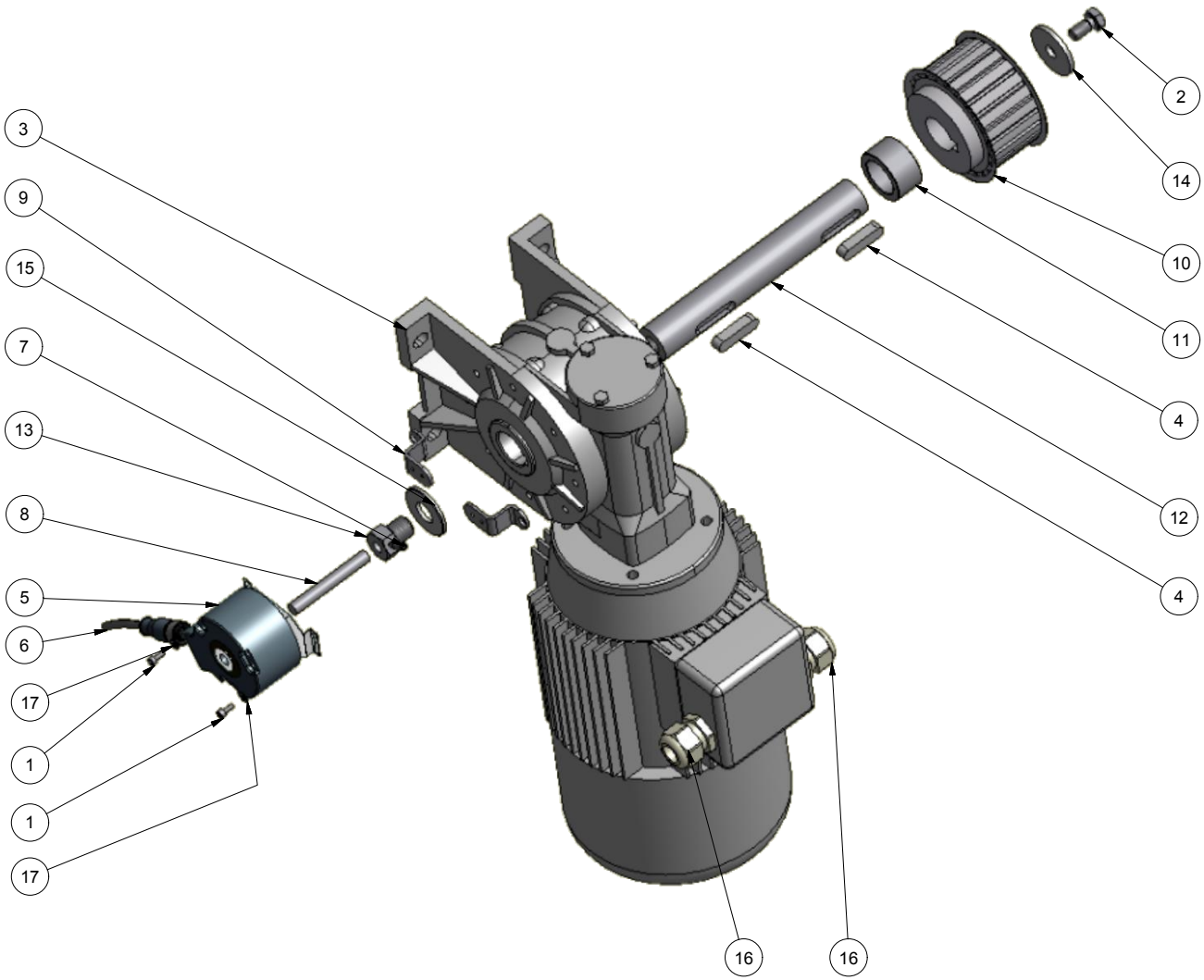

Break all edges

Revision:	Approved	Date:	Revision Description
1	HG	28-09-2015	Revision changed to numeric

The document is strictly confidential and may on no account be copied or disclosed to any third person.

HEDENSTED GRUPPEN A/S

HEDENSTED GRUPPEN

Scale: 1 : 3

Not specificed tolerance according to: DS/ISO 2768-m

Surface properties:

Sheet size: A3

Sheet: 1 /1

Part No.: 207852

Material:

Description 1: Gear for tower

Description 2:

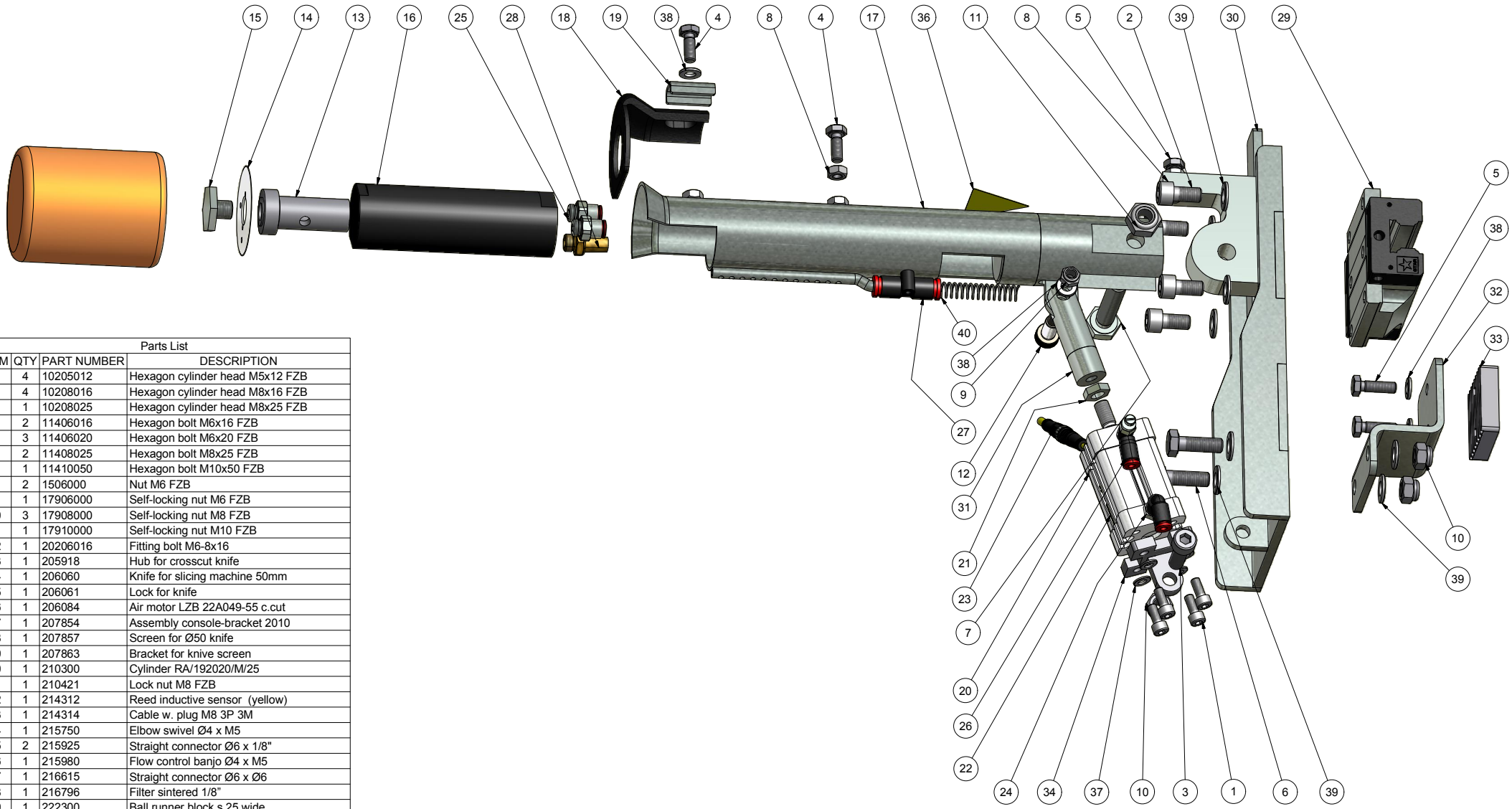

Parts List			
ITEM	QTY	PART NUMBER	DESCRIPTION
1	4	10205012	Hexagon cylinder head M5x12 FZB
2	4	10208016	Hexagon cylinder head M8x16 FZB
3	1	10208025	Hexagon cylinder head M8x25 FZB
4	2	11406016	Hexagon bolt M6x16 FZB
5	3	11406020	Hexagon bolt M6x20 FZB
6	2	11408025	Hexagon bolt M8x25 FZB
7	1	11410050	Hexagon bolt M10x50 FZB
8	2	1506000	Nut M6 FZB
9	1	17906000	Self-locking nut M6 FZB
10	3	17908000	Self-locking nut M8 FZB
11	1	17910000	Self-locking nut M10 FZB
12	1	20206016	Fitting bolt M6-8x16
13	1	205918	Hub for crosscut knife
14	1	206060	Knife for slicing machine 50mm
15	1	206061	Lock for knife
16	1	206084	Air motor LZB 22A049-55 c.cut
17	1	207854	Assembly console-bracket 2010
18	1	207857	Screen for Ø50 knife
19	1	207863	Bracket for knive screen
20	1	210300	Cylinder RA/192020/M/25
21	1	210421	Lock nut M8 FZB
22	1	214312	Reed inductive sensor (yellow)
23	1	214314	Cable w. plug M8 3P 3M
24	1	215750	Elbow swivel Ø4 x M5
25	2	215925	Straight connector Ø6 x 1/8"
26	1	215980	Flow control banjo Ø4 x M5
27	1	216615	Straight connector Ø6 x Ø6
28	1	216796	Filter sintered 1/8"
29	1	222300	Ball runner block s.25 wide
30	1	30442	Assembly mountingplate for
31	1	30467	Assembly spring system
32	1	30470	Bracket for pulling of
33	1	30598	Clamping plate for AT5
34	1	30644	Assembly mountingbracket
35	1	30981	Endcab Yellow rubber
36	1	31002	Warning Sign rotating knives
37	4	82105900	Washer M5 FZB
38	4	82106000	Washer M6 FZB
39	8	82108000	Washer M8 FZB
40	1	M101054	Spring Ø1-D9-L45

Revision:	Approved	Date:	Revision Description
2	KL	25-04-2016	Ø4 Flow control changed to elbow

Break all edges

This document is the property of HEDENSTED GRUPPEN A/S

HEDENSTED GRUPPEN

Scale: 1 : 1,5	Not specified tolerance according to: DS/ISO 2768-m		Sheet size: A2
	Surface properties:		Sheet: 1 /2
Part No.: 207862	Material: Welded Steel Mild		
Description 1: Assembly crosscut knife 2010			
Description 2:			

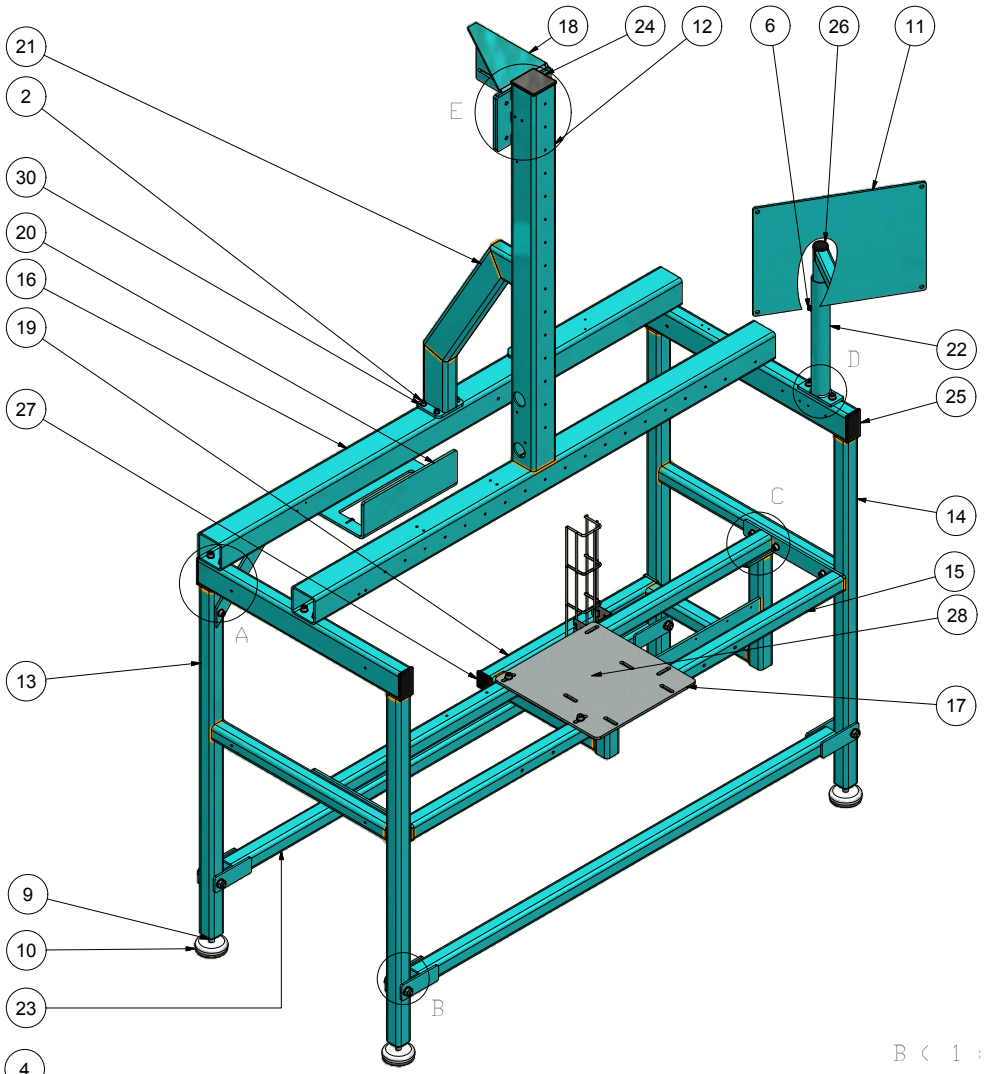

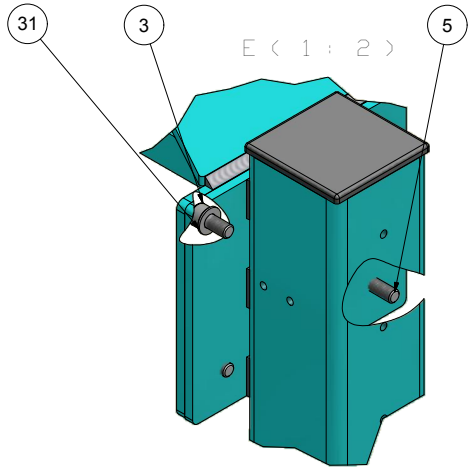

Parts List			
ITEM	QTY	PART NUMBER	DESCRIPTION
1	2	10206016	Hexagon cylinder head M6x16 FZB
2	4	10206020	Hexagon cylinder head M6x20 FZB
3	3	10208016	Hexagon cylinder head M8x16 FZB
4	26	10208020	Hexagon cylinder head M8x20FZB
5	1	10208030	Hexagon cylinder head M8x30 FZB
6	1	11406016	Hexagon bolt M6x16 FZB
7	4	11410065	Hexagon bolt M10x65 FZB
8	4	1510000	Nut M10 FZB
9	4	1512000	Nut M12 FZB
10	4	197350	Machine shoe M12x70xØ70
11	1	207935	Plate for controlbox assembly
12	1	30101	Assembly main profile
13	1	30112	Assembly right gable
14	1	30113	Assembly left gable
15	1	30121	Assembly central frame
16	1	30127	Back cross rail with
17	1	30132	Mountingplate for
18	1	30156	Assembly motorconsole
19	1	30164	Assembly, support controlbox
20	1	30167	Mountingplate for valves
21	1	30177	Reinforcement for frame
22	1	30210	Assembly for controlbox
23	2	30815	Bracket for transport
24	1	30970	End cap 70x70mm Black
25	4	30975	End cap 70x40mm Black
26	1	30978	End cap Ø28mm Black
27	1	30980	End cap 40x40mm Black
28	0,5 m	600440	Cable duct metal CF 54_50
29	2	600445	Cable duct U-bracket UC 50-G
30	6	82106000	Washer M6 FZB
31	30	82108000	Washer M8 FZB
32	8	82110000	Washer M10 FZB

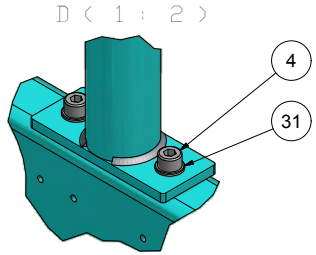

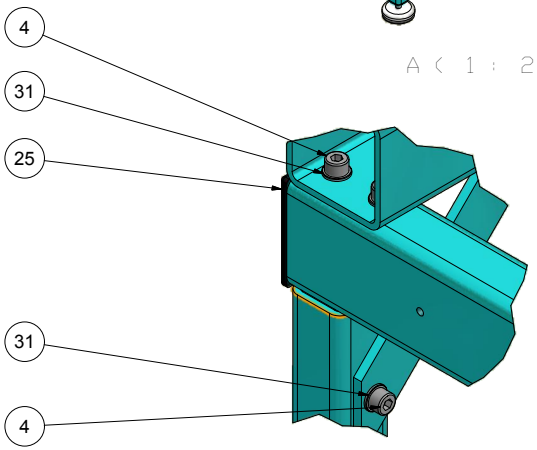

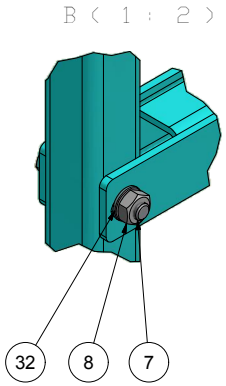

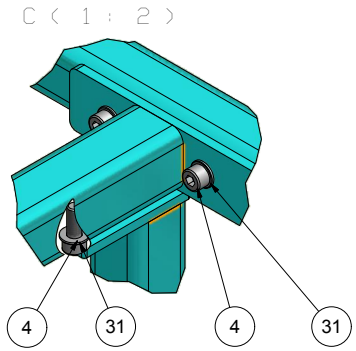

Revision:	Approved	Date:	Revision Description
1	HG	27-01-2016	nut M12 added

Break all edges

HEDENSTED GRUPPEN	Scale: 1 : 8	Not specified tolerance according to: DS/ISO 2768-m	Sheet size: A2
		Surface properties: No	Sheet: 1 /2
Part No.: 207939		Material:	
Description 1: Assembly frame combi cut M2010			
Description 2: Frame for combi cut			

This document is the property of HEDENSTED GRUPPEN A/S

Parts List			
ITEM	QTY	PART NUMBER	DESCRIPTION
1	4	10205020	Hexagon cylinder head M5x20 FZB
2	4	10205025	Hexagon cylinder head M5x25 FZB
3	2	10206010	Hexagon cylinder head M6x10 FZB
4	3	10206025	Hexagon cylinder head M6x25 FZB
5	1	20208020	Fitting bolt M8-10x20
6	1	207945	Frame for spade lift 2010
7	1	207954	Assembly leghook and tailroll
8	1	210427	Lock nut M10x1,25 FZB
9	1	211616	Cylinder RT/57225/M/50
10	1	214116	UF-Bracket QM/8025/32
11	1	214140	L-Bracket QM/57025/24
12	2	214311	Reed Inductive sensor for Roundline (Yellow)
13	2	214314	Cable w. plug M8 3P 3M
14	2	214319	Clamp for sensor Ø8-25mm, KLP 25
15	2	215110	Flow control banjo Ø6 x 1/8"t
16	1	30426	Assembly tailroll system
17	8	82105900	Washer M5 FZB

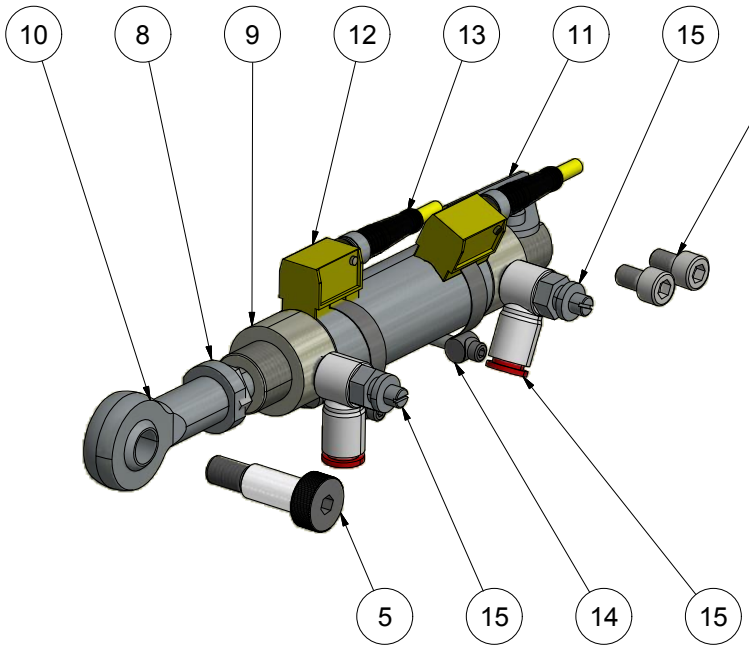

A (1 : 1,5)

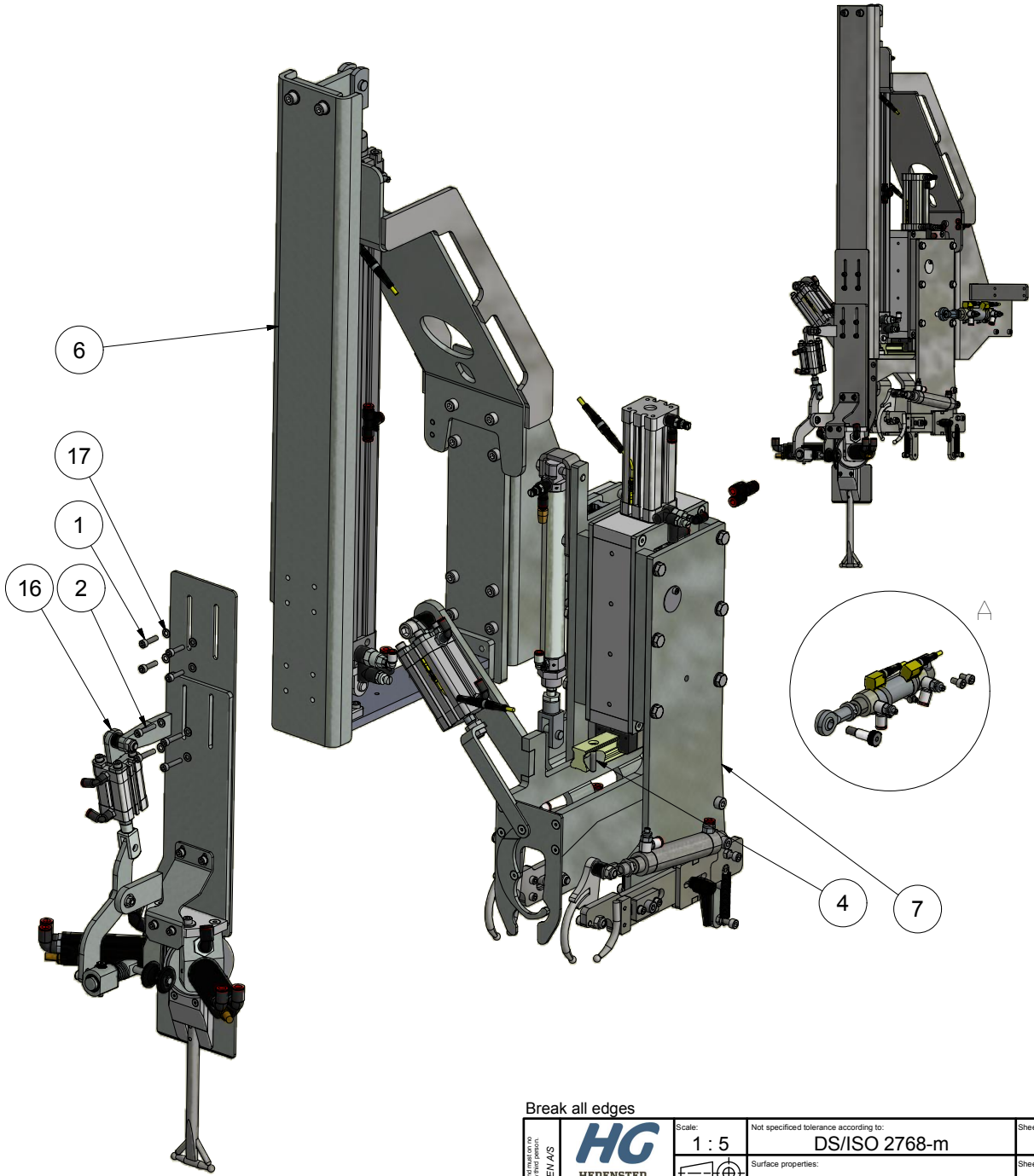

Break all edges

Revision:	Approved	Date:	Revision Description
3	MBO	18-05-2017	207949 changed

The document is strictly confidential and may in no account be copied or disclosed to any third person.
HEDENSTED GRUPPEN A/S

HEDENSTED GRUPPEN

Scale: 1 : 5	Not specificed tolerance according to: DS/ISO 2768-m		Sheet size: A3
	Surface properties:		Sheet: 1 /2
Part No.: 207943	Material:		
Description 1: Assembly tower 2010			
Description 2:			

Parts List			
ITEM	QTY	PART NUMBER	DESCRIPTION
1	12	10204020	Hexagon cylinder head M4x20 FZB
2	2	10206012	Hexagon cylinder head M6x12 FZB
3	4	10206016	Hexagon cylinder head M6x16 FZB
4	8	10206020	Hexagon cylinder head M6x20 FZB
5	2	10208012	Hexagon cylinder head M8x12 FZB
6	2	10208020	Hexagon cylinder head M8x20FZB
7	6	10208030	Hexagon cylinder head M8x30 FZB
8	2	10208035	Hexagon cylinder head M8x35 FZB
9	2	20406025	Hexagon countersunk head M6x25 FZB
10	4	20408016	Hexagon countersunk head M8x16 FZB
11	4	20408020	Hexagon countersunk head M8x20 FZB
12	1	207861	Bracket for sensor, tower, Combi Cut 2010
13	1	207880	Reinforcement for tower
14	1	207885	Console for tower model 2008
15	1	207887	Horisontial console for tower
16	1	207890	Connectionplate-spade cylinder
17	1	207895	Horisontial console model ES
18	1	212129	Cylinder PRA/182040/M/500
19	1	214120	F-Bracket QM/8040/25
20	1	214160	L-Bracket QA/8040/24
21	2	214312	Reed inductive sensor (yellow)
22	2	214314	Cable w. plug M8 3P 3M
23	1	215730	Elbow swirvel Ø6 x 1/8"t
24	1	215850	Tee Ø6 x Ø6 x Ø6
25	1	215992	Flow control Banjo Ø6 x 1/4"
26	2	222300	Ball runner block s.25 wide
27	2	222315	Ball runner block s.15 wide
28	1	222337	Ball guide rail s.15/700mm
29	1	30268	Clamping plate for AT10
30	1	30291	Bracket assembly for
31	1	30700	Connection plate for belt
32	1	30820	Bracket for energi chain
33	2	82106000	Washer M6 FZB
34	2	82108000	Washer M8 FZB
35	1	M102018	Valve no-return, pilot opreated, Ø6 x 1/4"t

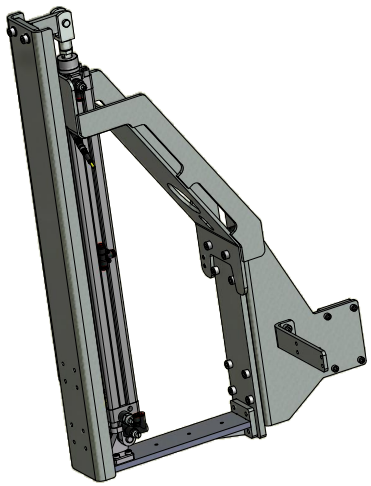

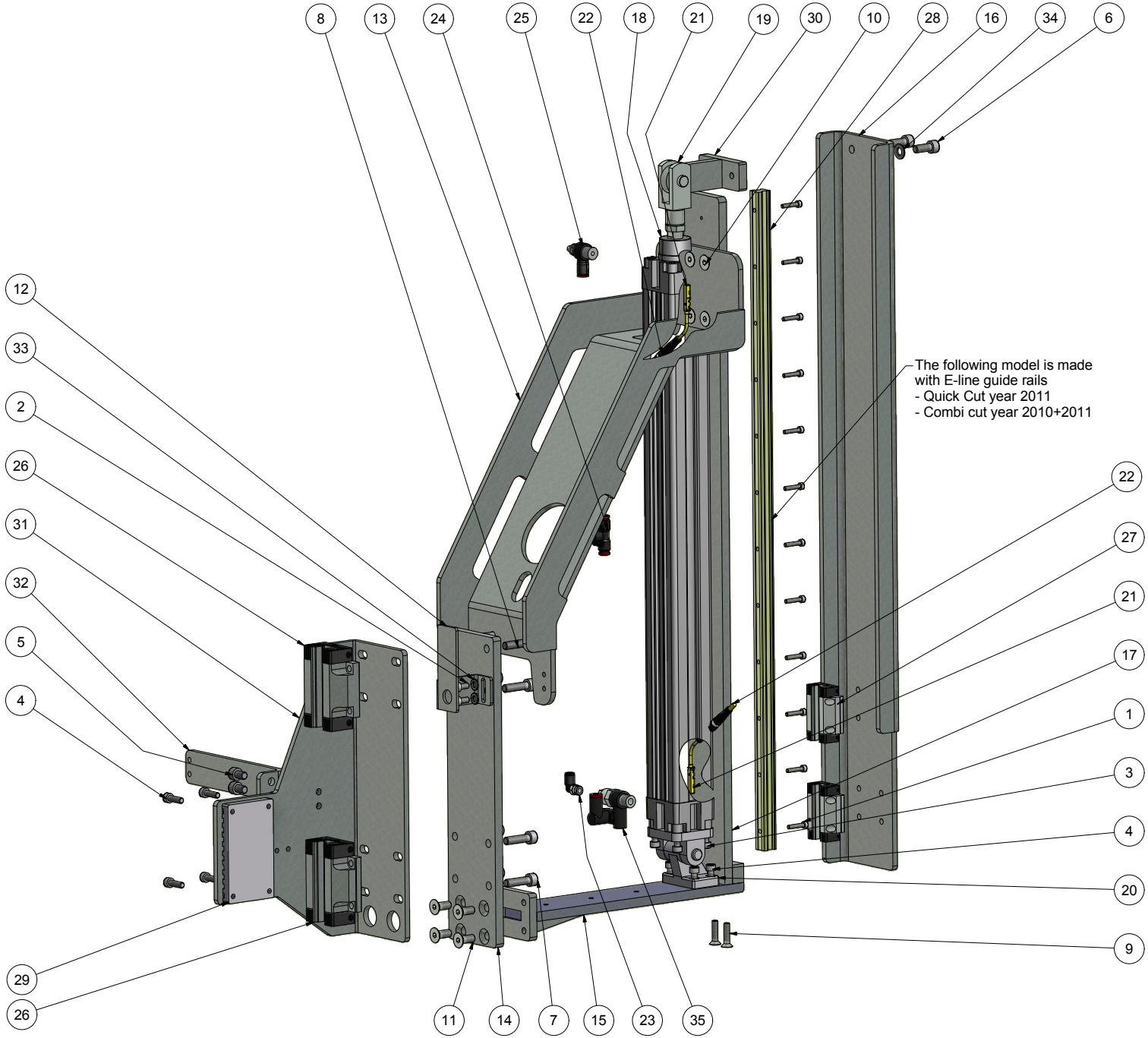

Break all edges

Revision:	Approved	Date:	Revision Description
2	KL	25-04-2016	No-return valve added

This drawing is the property of HEDENSTED GRUPPEN A/S. Reproduction or disclosure to third parties without written consent is prohibited.

HEDENSTED GRUPPEN

Scale: 1 : 6	Not specified tolerance according to: DS/ISO 2768-m	Sheet size: A2
	Surface properties:	Sheet: 1 /2
Part No.: 207945	Material:	
Description 1: Frame for spade lift 2010		
Description 2:		

Parts List			
ITEM	QTY	PART NUMBER	DESCRIPTION
1	1	207949	Left leghook system 2010
2	1	207848	Right leghook system
3	1	207951	Tailspadesystem 2010

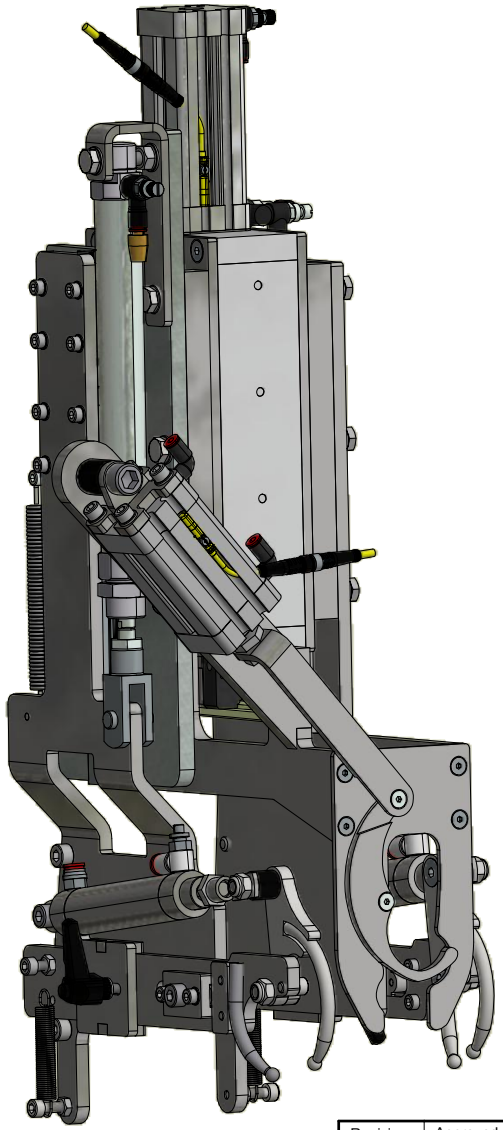

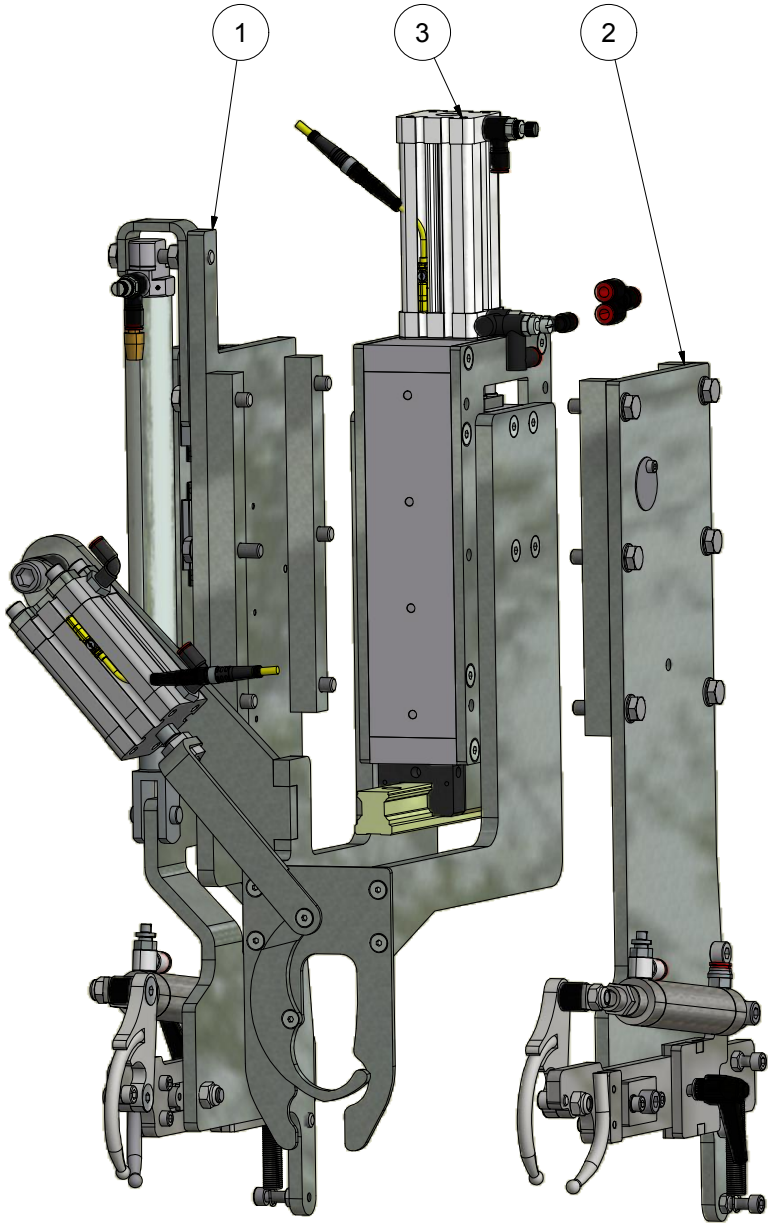

Break all edges

Revision:	Approved	Date:	Revision Description
2	MBO	18-05-2017	207949 updated

The document is strictly confidential and can in no account be copied or disclosed to any third person.

HEDENSTED GRUPPEN A/S

Scale: 1 : 3

Not specificed tolerance according to: DS/ISO 2768-m

Sheet size: A3

Surface properties:

Sheet: 1 /2

Part No.: 207954

Material:

Description 1: Assembly leghook and tailroll

Description 2:

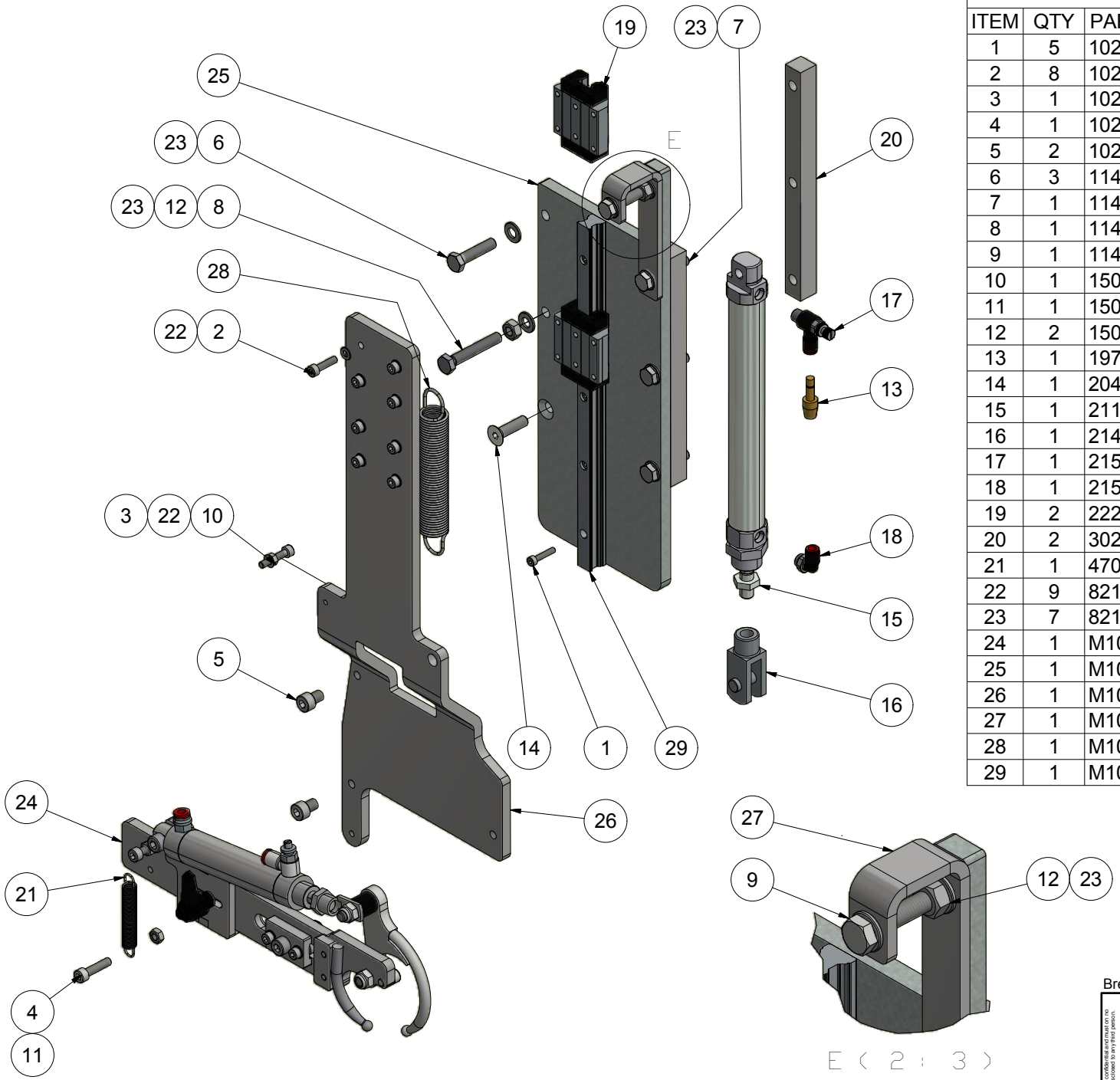

Parts List

ITEM	QTY	PART NUMBER	DESCRIPTION
1	5	10204020	Hexagon cylinder head M4x20 FZB
2	8	10205020	Hexagon cylinder head M5x20 FZB
3	1	10205025	Hexagon cylinder head M5x25 FZB
4	1	10206025	Hexagon cylinder head M6x25 FZB
5	2	10208010	Hexagon cylinder head M8x10 FZB
6	3	11408035	Hexagon bolt M8x35 FZB
7	1	11408040	Hexagon bolt M8x40 FZB
8	1	11408050	Hexagon bolt M8x50 FZB
9	1	11408055	Hexagon bolt M8x55 FZB
10	1	1505000	Nut M5 FZB
11	1	1506000	Nut M6 FZB
12	2	1508000	Nut M8 FZB
13	1	197337	Filter stem Ø6 pipe Metal
14	1	20408030	Hexagon countersunk head M8x30 FZB
15	1	211010	Cylinder RM/8026/M/160
16	1	214115	F-Bracket QM/8025/25
17	1	215105	Flow banjo control Ø6 x 1/8"
18	1	215760	Elbow swirvel Ø6 x 1/8"
19	2	222315	Ball runner block s.15 wide
20	2	30240	Distance block for tower
21	1	470580	Expansion spring Ø1,0 D11 L70
22	9	82105900	Washer M5 FZB
23	7	82108000	Washer M8 FZB
24	1	M101636	Leghook system Left XL
25	1	M102685	Support for carrying plate
26	1	M102686	Left carrying plate
27	1	M102687	Bracket for cylinder CC
28	1	M102690	Expansion spring Ø2,16 - D21,59 L139,7
29	1	M102691	Ball guide rail s.15/300mm

Break all edges

Revision:	Approved	Date:	Revision Description
3	MBO	04-05-2017	Cylinder changed to L=160 mm

The document is strictly confidential and can in no account be copied or discloses to any third person.
HEDENSTED GRUPPEN A/S

HEDENSTED GRUPPEN

Scale: 1:3	Not specificed tolerance according to: DS/ISO 2768-m		Sheet size: A3
	Surface properties:		Sheet: 1 /2
Part No.: 207949	Material:		
Description 1: Left leghook system 2010			
Description 2:			

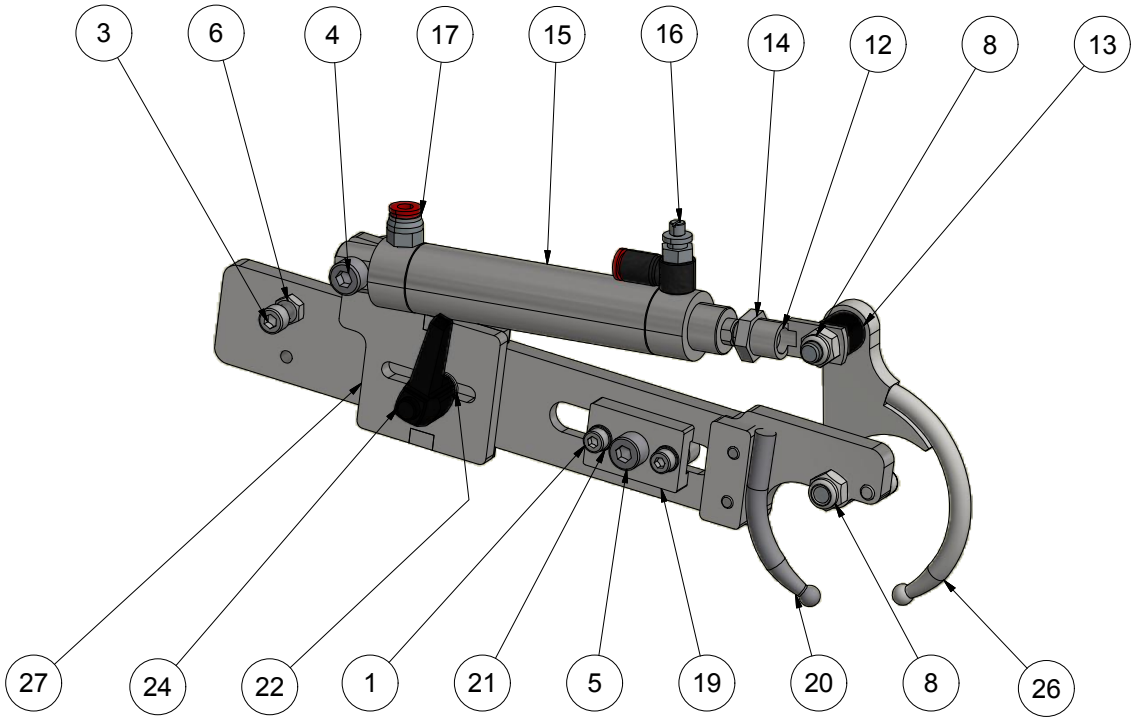

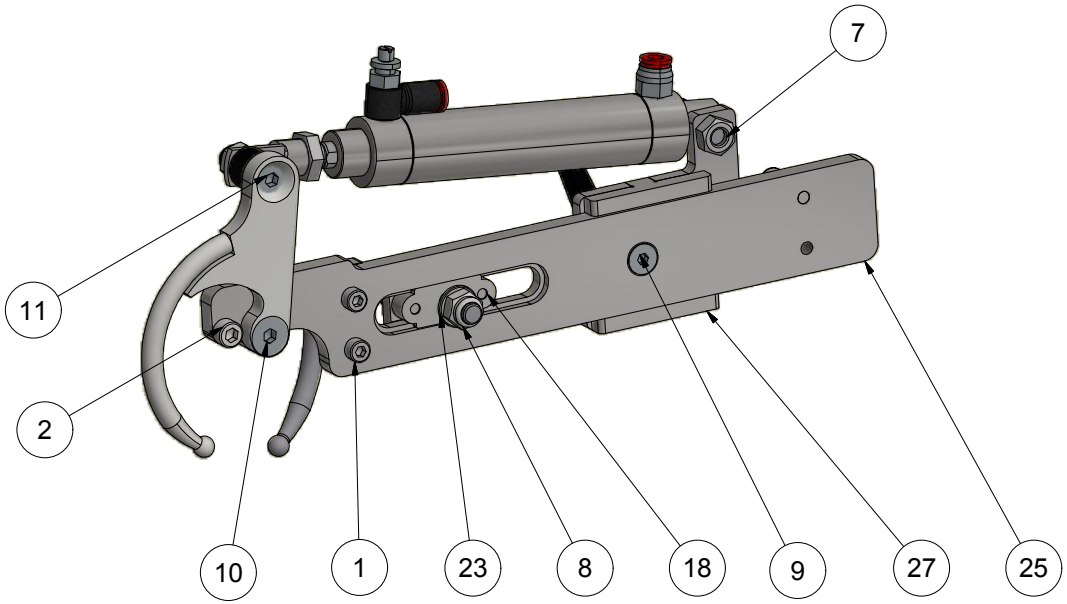

PARTS LIST

ITEM	QTY	PART NUMBER	DESCRIPTION
1	4	10205016	Hexagon cylinder head M5x16 FZB
2	1	10206010	Hexagon cylinder head M6x10 FZB
3	1	10206020	Hexagon cylinder head M6x20 FZB
4	1	10208025	Hexagon cylinder head M8x25 FZB
5	1	10208035	Hexagon cylinder head M8x35 FZB
6	1	1506000	Nut M6 FZB
7	1	1508000	Nut M8 FZB
8	3	17908000	Self-locking nut M8 FZB
9	1	20406025	Hexagon countersunk head M6x25 FZB
10	1	20408025	Hexagon countersunk head M8x25 FZB
11	1	20408035	Hexagon countersunk head M8x35 FZB
12	1	207856	Bracket for leghook
13	1	207870	Spacer for leghooks
14	1	210427	Lock nut M10x1,25 FZB
15	1	211018	Cylinder RT/57225/M/80
16	1	215110	Flow control banjo Ø6 x 1/8"t
17	1	215900	Straight connector Ø6 x 1/8"t
18	1	30255	T-bolt for arm
19	1	30265	Block for T-bolt
20	1	30662	Left back-hook - small
21	2	82105900	Washer M5 FZB
22	1	82106000	Washer M6 FZB
23	1	82108000	Washer M8 FZB
24	1	M100288	Handle, adjustable 42 x M6 (F)
25	1	M101627	Arm for leg hooks left side
26	1	M101629	Leghook XL, big, left
27	1	M101632	Cylinder bracket left for XL hooks

Break all edges

Revision:	Approved	Date:	Revision Description
2	KL	19-05-2017	Big leghook changed to new model

The document is strictly confidential and may in no account be copied or discloses to any third person HEDENSTED GRUPPEN A/S

HEDENSTED GRUPPEN

Scale: 1 : 2	Not specificed tolerance according to: DS/ISO 2768-m		Sheet size: A3
	Surface properties: No		Sheet: 1 /1
Part No.: M101636	Material:		
Description 1: Leghook system Left XL			
Description 2: Combi Cut 2016 -			

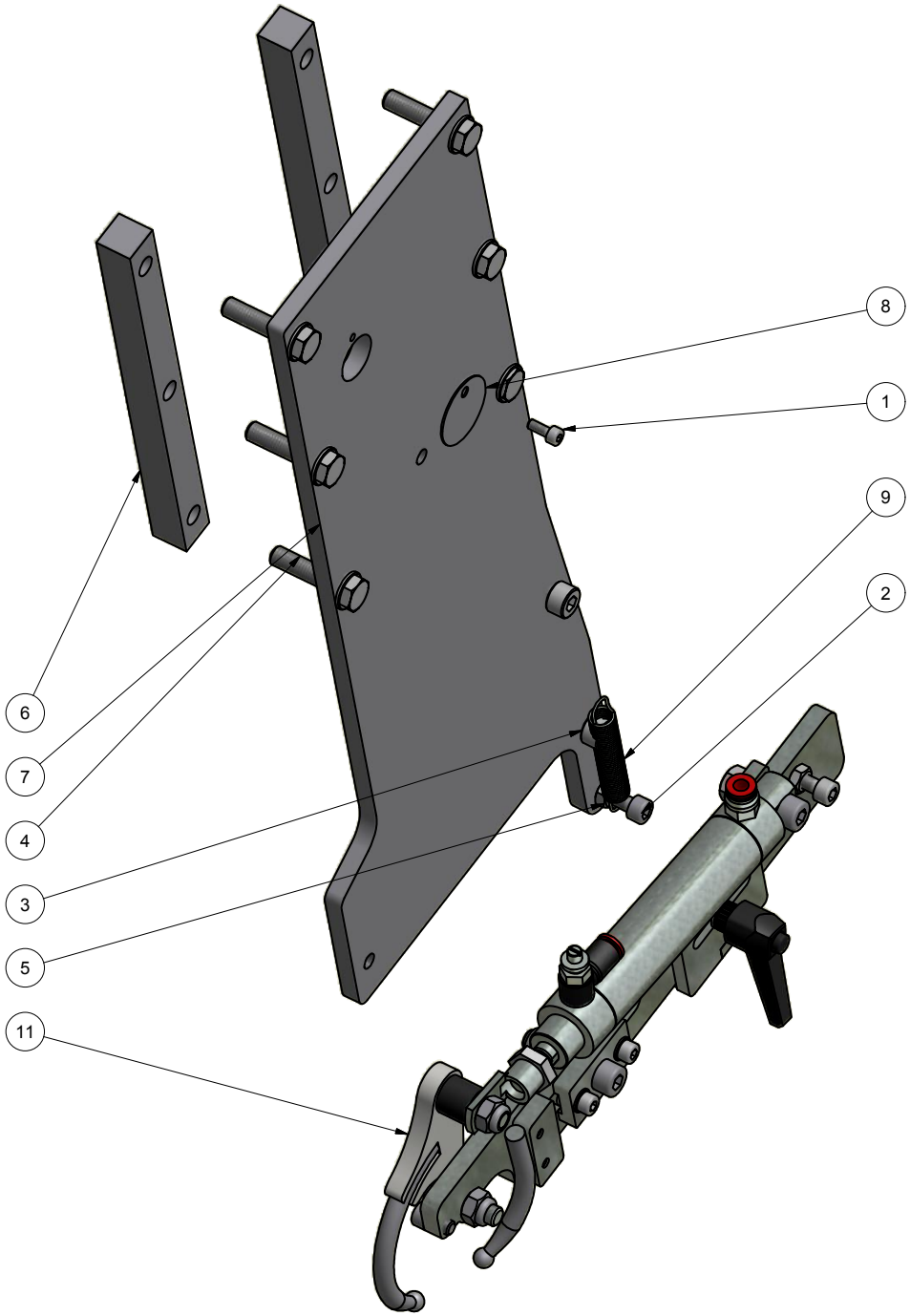

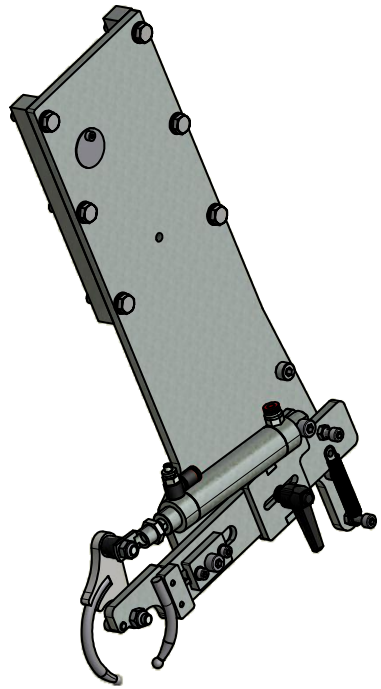

Parts List			
ITEM	QTY	PART NUMBER	DESCRIPTION
1	1	10204010	Hexagon cylinder head M4x10 FZB
2	1	10206025	Hexagon cylinder head M6x25 FZB
3	2	10208010	Hexagon cylinder head M8x10 FZB
4	6	11408035	Hexagon bolt M8x35 FZB
5	1	1506000	Nut M6 FZB
6	2	30240	Distance block for tower
7	1	30325	Right carrying plate
8	1	30328	Coverplate f. lubricating
9	1	470580	Extension spring ø1,0x70x11 VZ
10	6	82108000	Chamfered Washer M8 FZB
11	1	M101638	Leghook system Right XL

Break all edges

Revision:	Approved	Date:	Revision Description
2	KL	06-01-2016	Leghooks changed to XL

The document is strictly confidential and may in no account be copied or discloses to any third person HEDENSTED GRUPPEN A/S

HEDENSTED GRUPPEN

Scale: 1 : 2	Not specificed tolerance according to: DS/ISO 2768-m		Sheet size: A3
	Surface properties:		Sheet: 1 /2
Part No.: 207848	Material:		
Description 1: Right leghook system			
Description 2:			

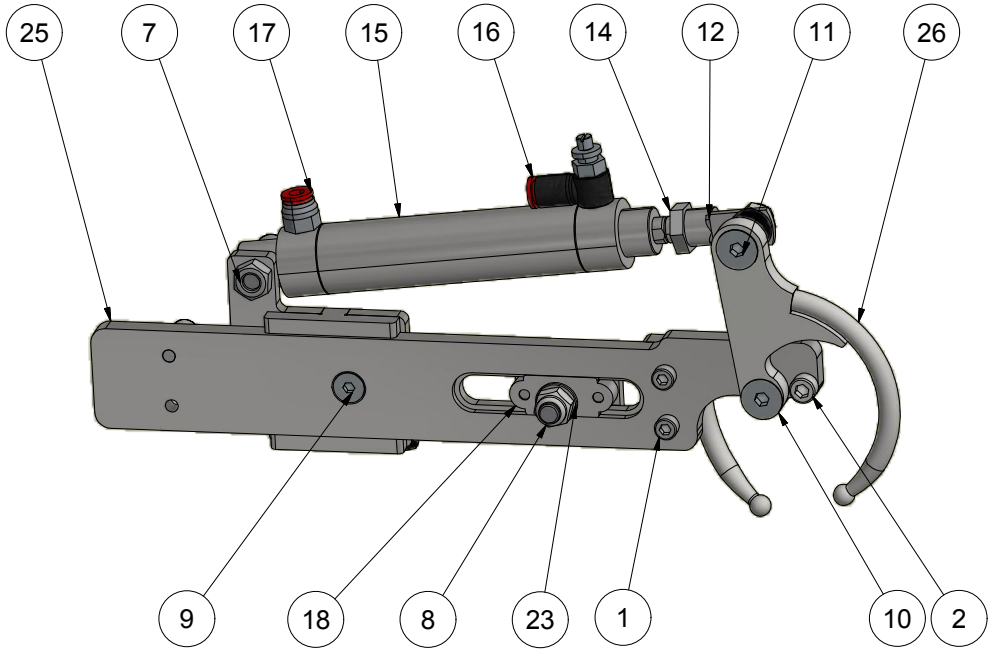

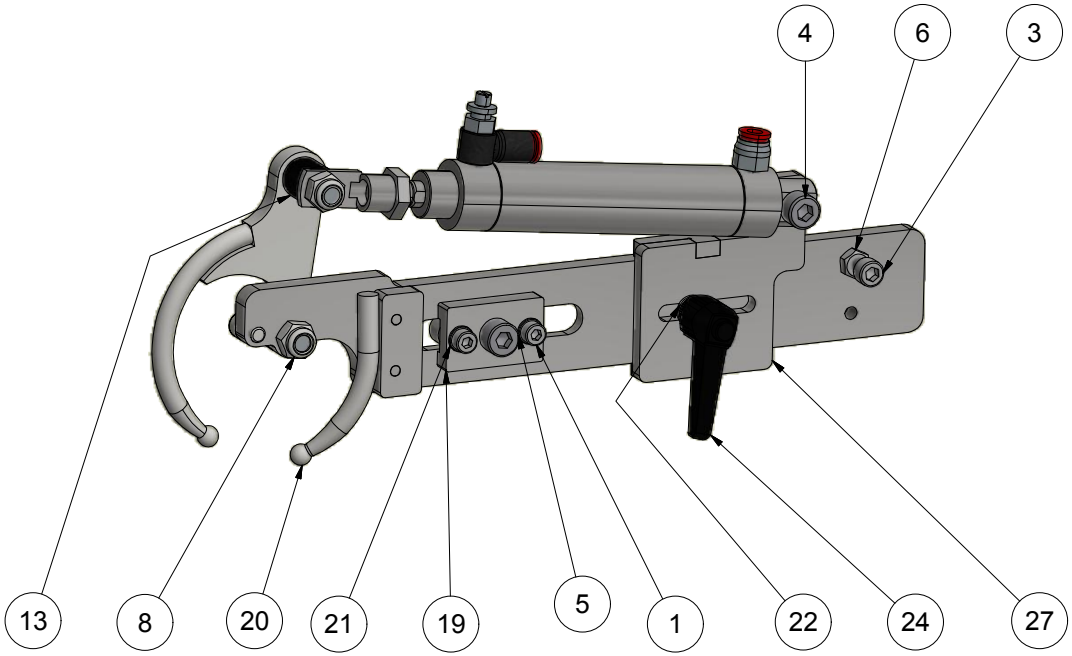

PARTS LIST

ITEM	QTY	PART NUMBER	DESCRIPTION
1	4	10205016	Hexagon cylinder head M5x16 FZB
2	1	10206010	Hexagon cylinder head M6x10 FZB
3	1	10206020	Hexagon cylinder head M6x20 FZB
4	1	10208025	Hexagon cylinder head M8x25 FZB
5	1	10208035	Hexagon cylinder head M8x35 FZB
6	1	1506000	Nut M6 FZB
7	1	1508000	Nut M8 FZB
8	3	17908000	Self-locking nut M8 FZB
9	1	20406025	Hexagon countersunk head M6x25 FZB
10	1	20408025	Hexagon countersunk head M8x25 FZB
11	1	20408035	Hexagon countersunk head M8x35 FZB
12	1	207856	Bracket for leghook
13	1	207870	Spacer for leghooks
14	1	210427	Lock nut M10x1,25 FZB
15	1	211018	Cylinder RT/57225/M/80
16	1	215110	Flow control banjo Ø6 x 1/8"t
17	1	215900	Straight connector Ø6 x 1/8"t
18	1	30255	T-bolt for arm
19	1	30265	Block for T-bolt
20	1	30663	Right back-hook - small
21	2	82105900	Washer M5 FZB
22	1	82106000	Washer M6 FZB
23	1	82108000	Washer M8 FZB
24	1	M100288	Handle, adjustable 42 x M6 (F)
25	1	M101628	Arm for XL leg hooks right side
26	1	M101630	Leghook XL, big, Right
27	1	M101634	Cylinder bracket Right for XL hook

Break all edges

Revision:	Approved	Date:	Revision Description
2	KL	19-05-2017	Big leghook changed for new model

The document is strictly confidential and may in no account be copied or discloses to any third person HEDENSTED GRUPPEN A/S

HEDENSTED GRUPPEN

Scale: 1 : 2	Not specificed tolerance according to: DS/ISO 2768-m	Sheet size: A3
	Surface properties: No	Sheet: 1 /1
Part No.: M101638	Material:	
Description 1: Leghook system Right XL		
Description 2: Combi Cut 2016 -		

Parts List			
ITEM	QTY	PART NUMBER	DESCRIPTION
9	4	20406025	Hexagon countersunk head M6x25 FZB
10	2	207986	Ball runner block s.25 long
11	1	207989	Ball guide rail s.25/170mm
12	1	207990	Ball guide rail s.25/200mm
13	1	210305	Cylinder RA/192032/M/50
14	1	210340	Cylinder RA/192032/M/80
15	3	210427	Lock nut M10x1,25 FZB
16	2	214312	Reed inductive sensor (yellow)
17	2	214314	Cable w. plug M8 3P 3M
18	1	215105	Flow banjo control Ø6 x 1/8"
19	2	215755	Elbow swivel Ø4 x1/8"
20	1	215860	Y-connector 2xØ6 x Ø6
21	1	216550	Elbow swivel Ø6 x M5
22	1	30500	Connecting piece - tower
23	1	30504	Bush for cylinder
24	1	30505	Plate for vertical rail -tower
25	1	30510	Connecting piece-vertical rail
26	1	30512	Plate for connetion piece
27	2	30525	Bearing plate f. vertical rail
28	1	30535	Top for tower
29	1	30615	Right plate for back spade
30	1	30620	Assembly -plate for back spade
31	1	30625	Spacer for tail hook cyl.
32	1	30641	Assembly bracket f.
33	1	30698	Tail spade system C.Cut
34	12	82106000	Washer M6 FZB
35	1	M102017	Valve no-return, pilot operated, Ø6 x 1/8"t
36	1	M102028	Spacer plate 1,0 mm for cylinder Ø32

Parts List			
ITEM	QTY	PART NUMBER	DESCRIPTION
1	8	10206012	Hexagon cylinder head M6x12 FZB
2	4	10206016	Hexagon cylinder head M6x16 FZB
3	4	10206025	Hexagon cylinder head M6x25 FZB
4	4	10206050	Hexagon cylinder head M6x50 FZB
5	1	10212050	Hexagon cylinder head M12x50 FZB
6	1	1512000	Nut M12 FZB
7	4	20405012	Hexagon countersunk head M5x12 FZB
8	20	20406020	Hexagon countersunk head M6x20 FZB

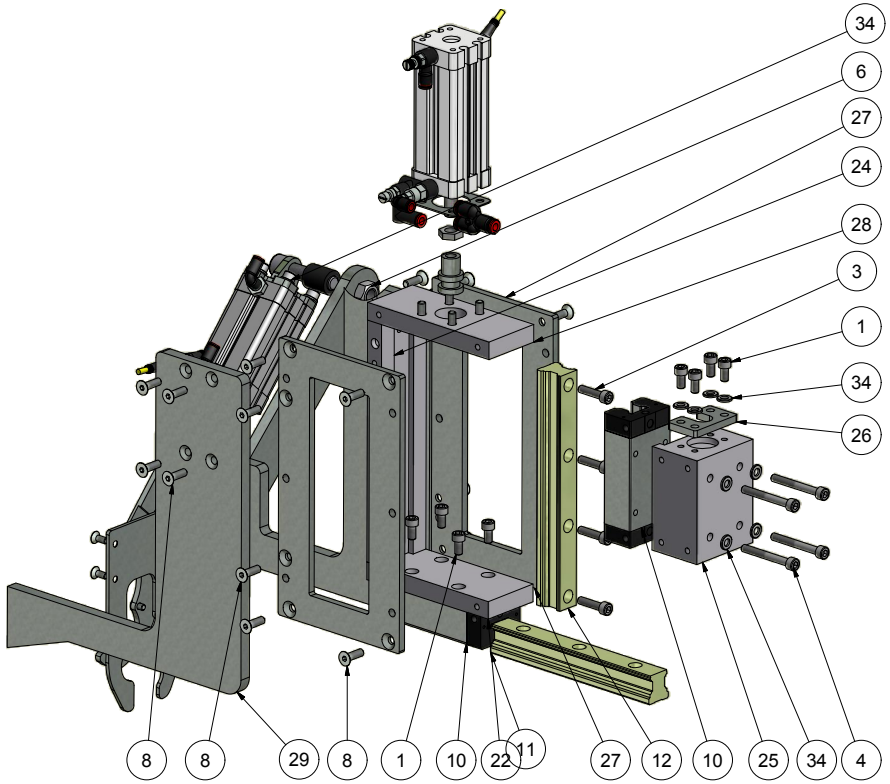

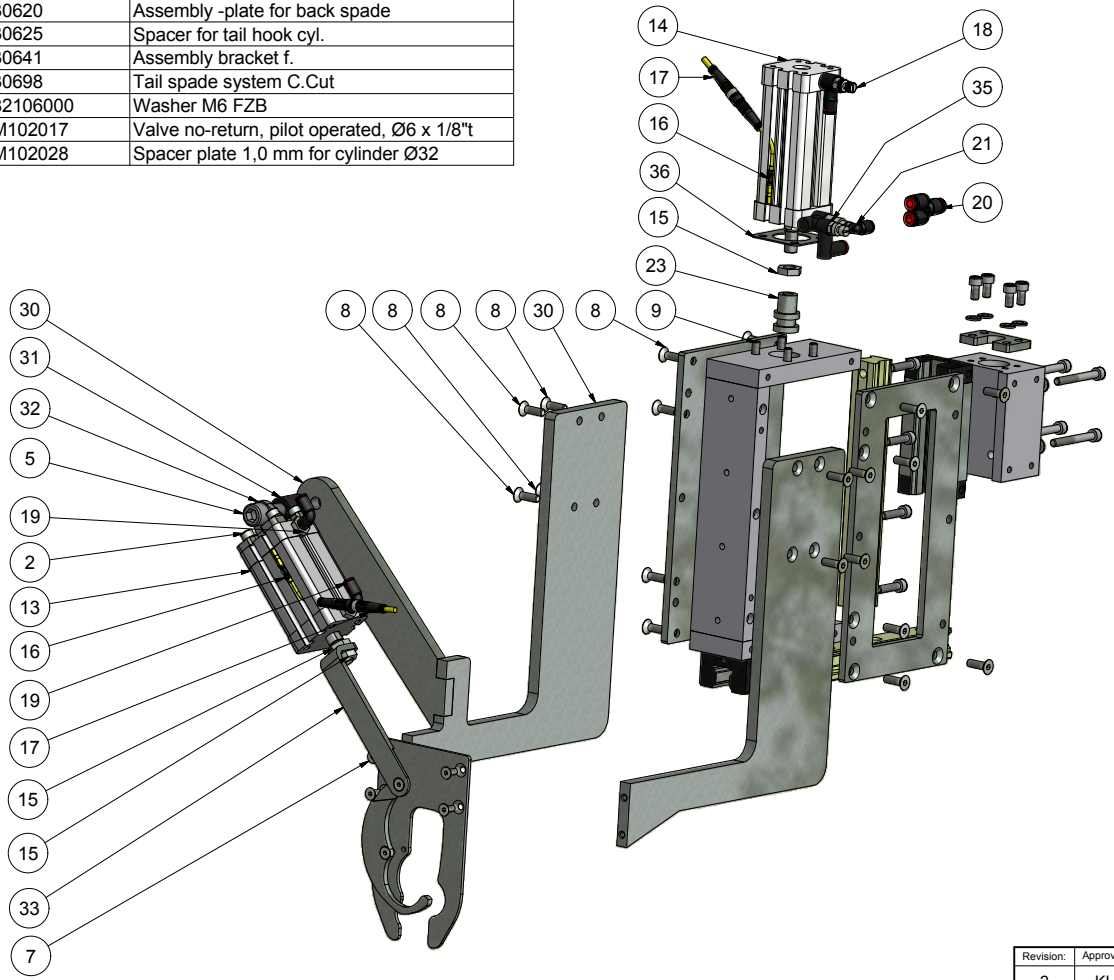

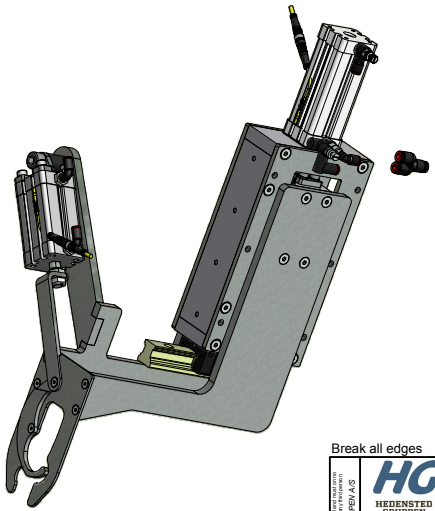

Break all edges

Revision:	Approved	Date:	Revision Description
2	KL	28-09-2015	No-return valve added

This drawing is the property of HEDENSTED GRUPPEN A/S. Reproduction or disclosure to third parties without written consent is prohibited.

HEDENSTED GRUPPEN A/S

Scale: 1 : 3

Not specified tolerance according to: DS/ISO 2768-m

Surface properties:

Sheet size: A2

Sheet: 1 /2

Part No.: 207951

Material:

Description 1: Tailspadesystem 2010

Description 2:

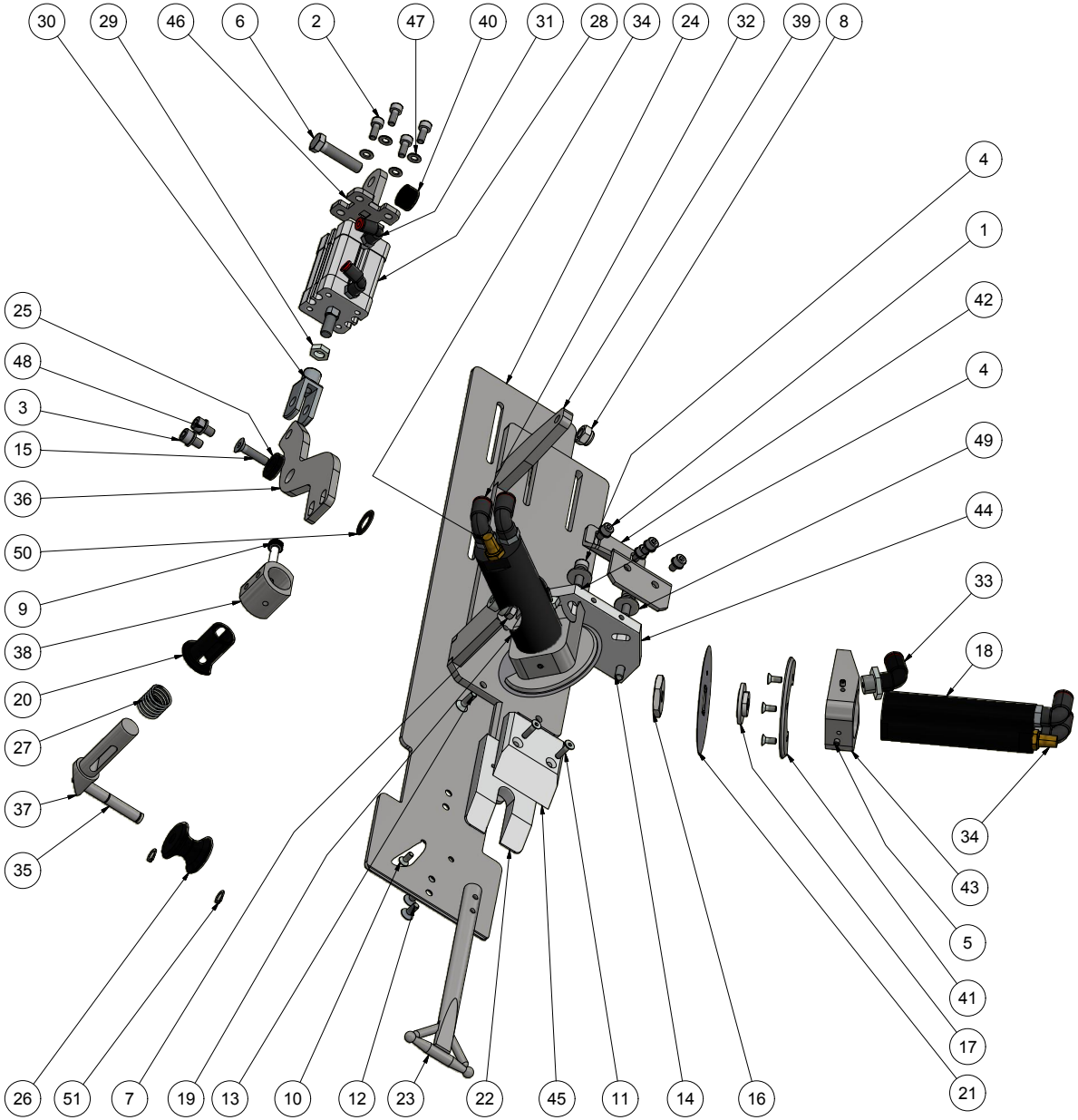

Parts List			
ITEM	QTY	PART NUMBER	DESCRIPTION
1	4	10205008	Hexagon cylinder head M5x8 FZB
2	4	10205012	Hexagon cylinder head M5x12 FZB
3	2	10206010	Hexagon cylinder head M6x10 FZB
4	2	10206020	Hexagon cylinder head M6x20 FZB
5	4	10504005	Stop screw M4x5-B
6	1	11408035	Hexagon bolt M8x35 FZB
7	1	1506000	Nut M6 FZB
8	1	17908000	Self-locking nut M8 FZB
9	1	20205025	Fitting bolt M5-6x25
10	8	20404010	Hexagon countersunk head M4x10 FZB
11	2	20404016	Hexagon countersunk head M4x16 FZB
12	4	20405012	Hexagon countersunk head M5x12 FZB
13	2	20405016	Hexagon countersunk head M5x16 FZB
14	2	20406020	Hexagon countersunk head M6x20 FZB
15	1	20406025	Hexagon countersunk head M6x25 FZB
16	2	206070	Lock for knives Ø70/80
17	2	206071	Hub for knives Ø70/80
18	1	206084	Air motor LZB 22A049-55 c.cut
19	1	206091	Air motor LZB Links
20	1	207820	Bushing for tailroll
21	2	207828-Y	Knife f. slicing machine 80 mm
22	1	207832	Wedge for belly loosener 2007
23	1	207834	Belly loosener - long
24	1	207838	Plate for belly loosener 2007
25	1	207855	Bush for tailroll -endpiece
26	1	207860	Tail roll Combi Cut, black
27	1	207931	Compression spring Ø1.8 D16 L20
28	1	210310	Cylinder RA/192025/M/25
29	1	210421	Lock nut M8 FZB
30	1	211100	F-Bracket QM/8020/25
31	2	215750	Elbow swivel Ø4 x M5
32	4	216536	Elbow swivel Ø8 x 1/8"
33	2	216537	Elbow swivel Ø8 x 1/4"
34	2	216796	Filter sintered 1/8”
35	1	30330	shaft for tail roll
36	1	30340	Arm for swing - tailroll
37	1	30345	Shaft for tailroll adjustment
38	1	30425	Consol for tailroll
39	1	30436	Plate assembly - tailroll
40	1	30437	Distance bush f.cyl RM192000
41	2	30511	Screen for 80mm knife
42	1	30515	Coverplate for knifes
43	2	30516	Bracket for air motor
44	1	30518	Baseplate for air motor
45	1	30520	Wedge for female
46	1	30647	Mounting bracket for ø25 cyl.
47	8	82105900	Washer M5 FZB
48	2	82106000	Washer M6 FZB
49	2	82606000	Washer Ø6,4x18x1,6 FZB
50	1	88712100	Shim washer Ø12x18x1,0
51	2	89708000	Seeger ring for shaft Ø8

Break all edges

Revision:	Approved	Date:	Revision Description
1	HG	27-09-2015	Revision changed to numeric

This document is strictly confidential and contain information belonging to HEDENSTED GRUPPEN A/S

HEDENSTED GRUPPEN

Scale: 0,40 : 1	Not specified tolerance according to: DS/ISO 2768-m		Sheet size: A2
	Surface properties:		Sheet: 1 /2
Part No.: 30426	Material:		
Description 1: Assembly tailroll system			
Description 2:			

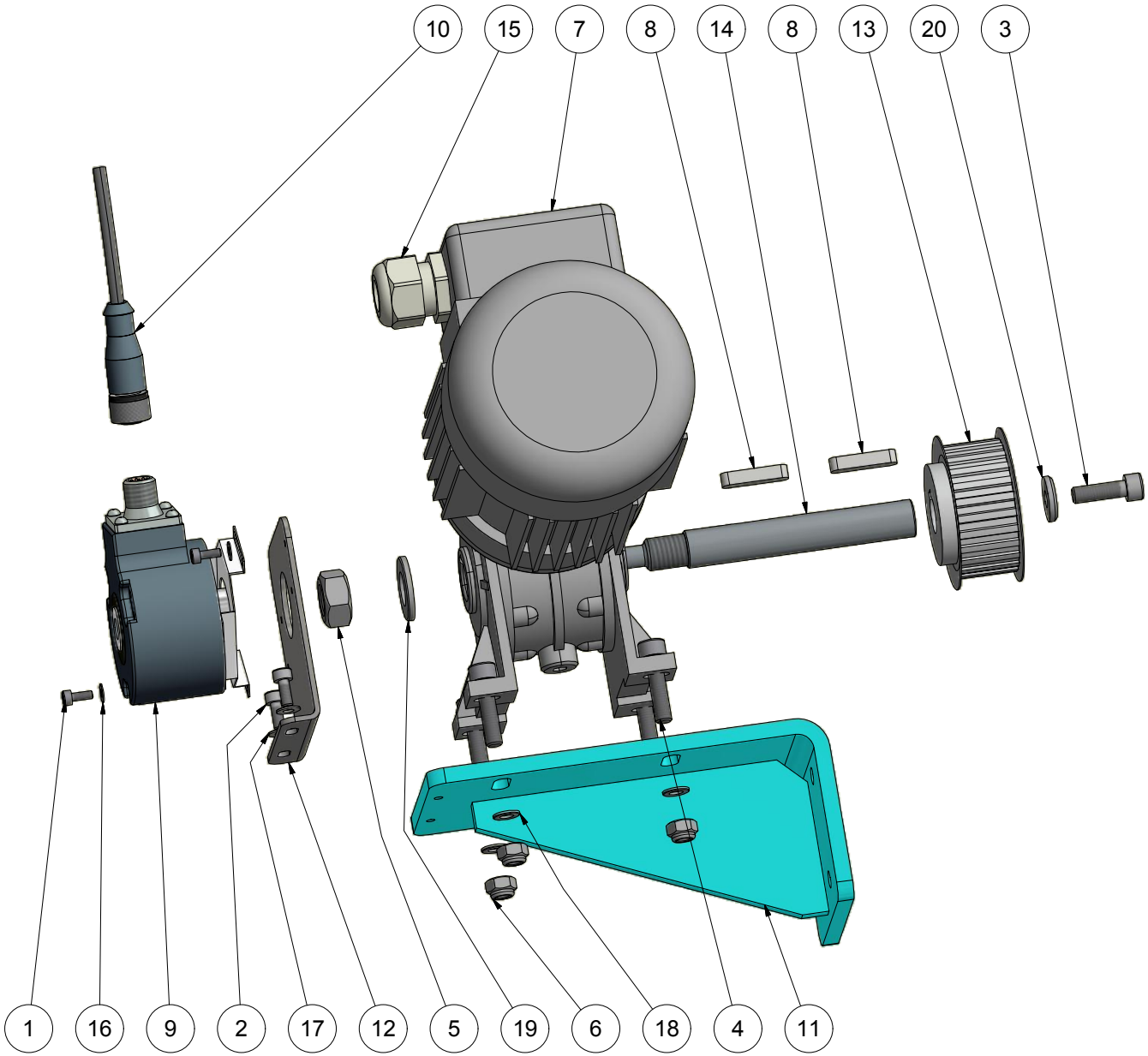

Parts List			
ITEM	QTY	PART NUMBER	DESCRIPTION
1	2	10203008	Hexagon cylinder head M3x08 FZB
2	2	10204010	Hexagon cylinder head M4x10 FZB
3	1	10206020	Hexagon cylinder head M6x20 FZB
4	4	10206025	Hexagon cylinder head M6x25 FZB
5	1	1512000	Nut M12 FZB
6	4	17906000	Self-locking nut M6 FZB
7	1	207903	Gearmotor STM RMI28S 1:10 M6
8	2	207946	Key 5x5x25mm DIN-6885A
9	1	207956	Encoder Ø8 hole 500p
10	1	207957	Cable w. plug M12 8P 5M
11	1	30144	Small engine bracket
12	1	30173	Bracket for encoder
13	1	30600	Pulley AT5 Z32 gear side
14	1	30780	Shaft for crosscut knife
15	1	600455	Cabel gland M20 Ø5-12
16	2	82103000	Washer M3 FZB
17	2	82104000	Washer M4 FZB
18	8	82105900	Washer M5 FZB
19	1	82112000	Washer M12 FZB
20	1	87606000	Washer Ø6,4x17x3 FZB

Break all edges

Revision:	Approved	Date:	Revision Description
1	HG	27-09-2015	Revision changed to numeric

The document is strictly confidential and can in no account be copied or discloses to any third person.
HEDENSTED GRUPPEN A/S

HEDENSTED GRUPPEN

Scale: 1 : 1,7	Not specificed tolerance according to: DS/ISO 2768-m		Sheet size: A3
	Surface properties:		Sheet: 1 /2
Part No.: 207959	Material:		
Description 1: Gear for crossent knife 2010			
Description 2:			

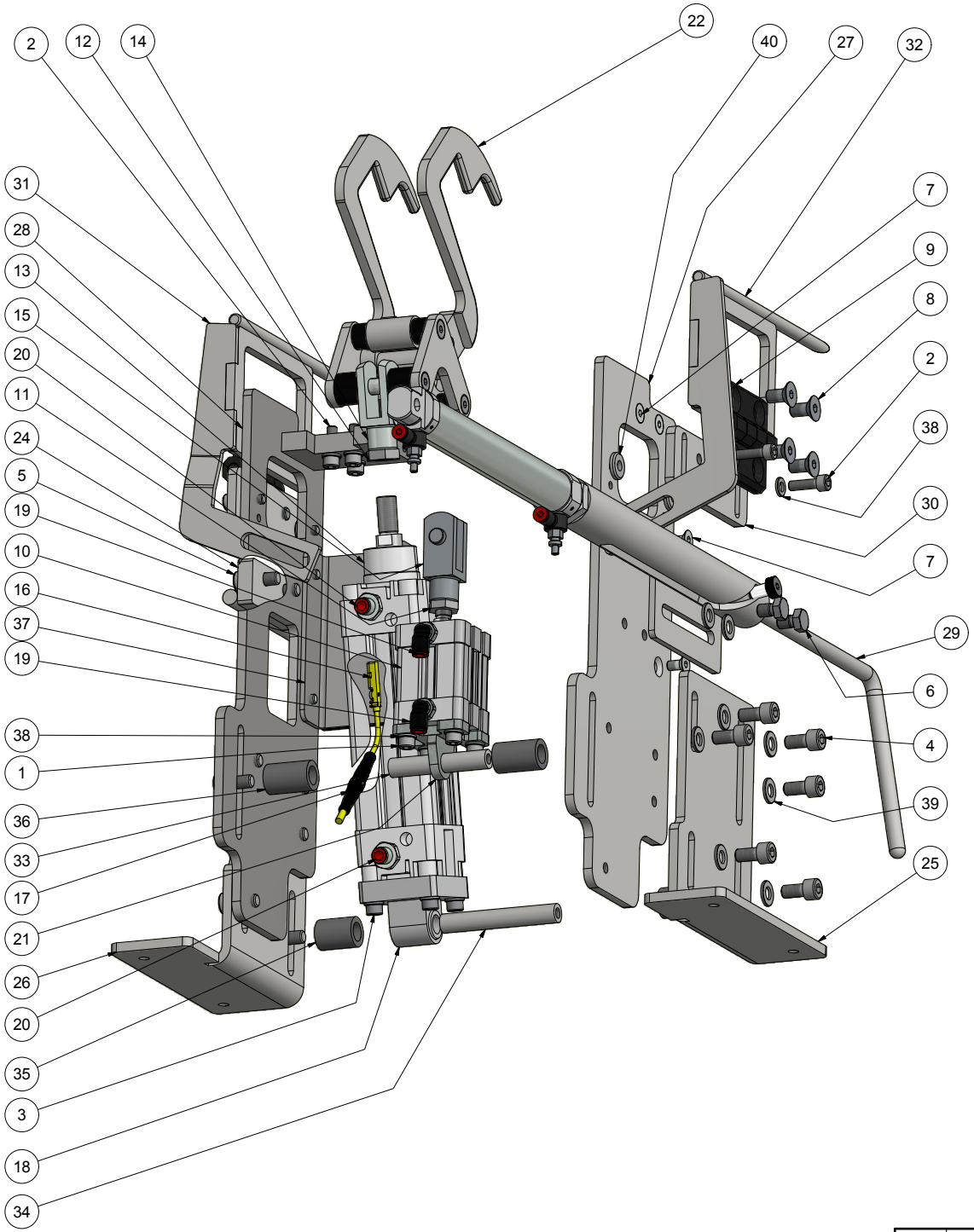

Parts List			
ITEM	QTY	PART NUMBER	DESCRIPTION
1	4	10206016	Hexagon cylinder head M6x16 FZB
2	7	10206020	Hexagon cylinder head M6x20 FZB
3	4	10206025	Hexagon cylinder head M6x25 FZB
4	12	10208016	Hexagon cylinder head M8x16 FZB
5	2	10208020	Hexagon cylinder head M8x20FZB
6	2	11408012	Hexagon bolt M8x12 FZB
7	8	20406012	Hexagon countersunk head M6x12 FZB
8	8	20408016	Hexagon countersunk head M8x16 FZB
9	2	207940	Hinge 60 x 60mm alu
10	1	210330	Cylinder RA/192032/M/20
11	1	210427	Lock nut M10x1,25 FZB
12	1	210428	Lock nut M12x1,25 FZB
13	1	212123	Cylinder PRA/182040/M/80
14	1	214108	F-Bracket QM/57040/25
15	1	214115	F-Bracket QM/8025/25
16	1	214312	Reed inductive sensor (yellow)
17	1	214314	Cable w. plug M8 3P 3M
18	1	214905	R-Bracket QA/8040/27
19	2	215760	Elbow swirvel Ø6 x 1/8"
20	2	215930	Straight connector Ø6 x 1/4"
21	1	30641	Assembly bracket f.
22	1	30667	Ass. unit excentric bodyholder
23	1	30675	Bottom part f bodyhook
24	1	30702	Stop axle complete
25	1	30705	Body holder for outer plate
26	1	30706	Body holder for outer plate
27	1	30710	Body holder for inner plate
28	1	30711	Body holder for inner plate
29	1	30718	Assembly bodyholder QC
30	2	30740	Lower plate for tigh-support
31	1	30756	Assembly tigh-support right
32	1	30757	Assembly tigh-support left
33	1	30760	Axle for cylinder Ø32
34	1	30761	Axle for cylinder Ø40
35	2	30762	Spacer 19 x 12 x 24,8
36	2	30763	Spacer 19 x 12 x 29,7
37	1	30768	Plate for bodyholder w. rubber
38	15	82106000	Washer M6 FZB
39	16	82108000	Washer M8 FZB
40	4	87606000	Washer Ø6,4x17x3 FZB

Break all edges

Revision:	Approved	Date:	Revision Description
2	KL	19-05-2017	Lower bodyholder changed to 30718

This document is the property of HEDENSTED GRUPPEN A/S. It must not be copied or disclosed to third parties without written consent.

HEDENSTED GRUPPEN

Scale: 1 : 2	Not specified tolerance according to: DS/ISO 2768-m		Sheet size: A2
	Surface properties:		Sheet: 1 /3
Part No.: 207967	Material:		
Description 1: Assembly complete body holder			
Description 2:			

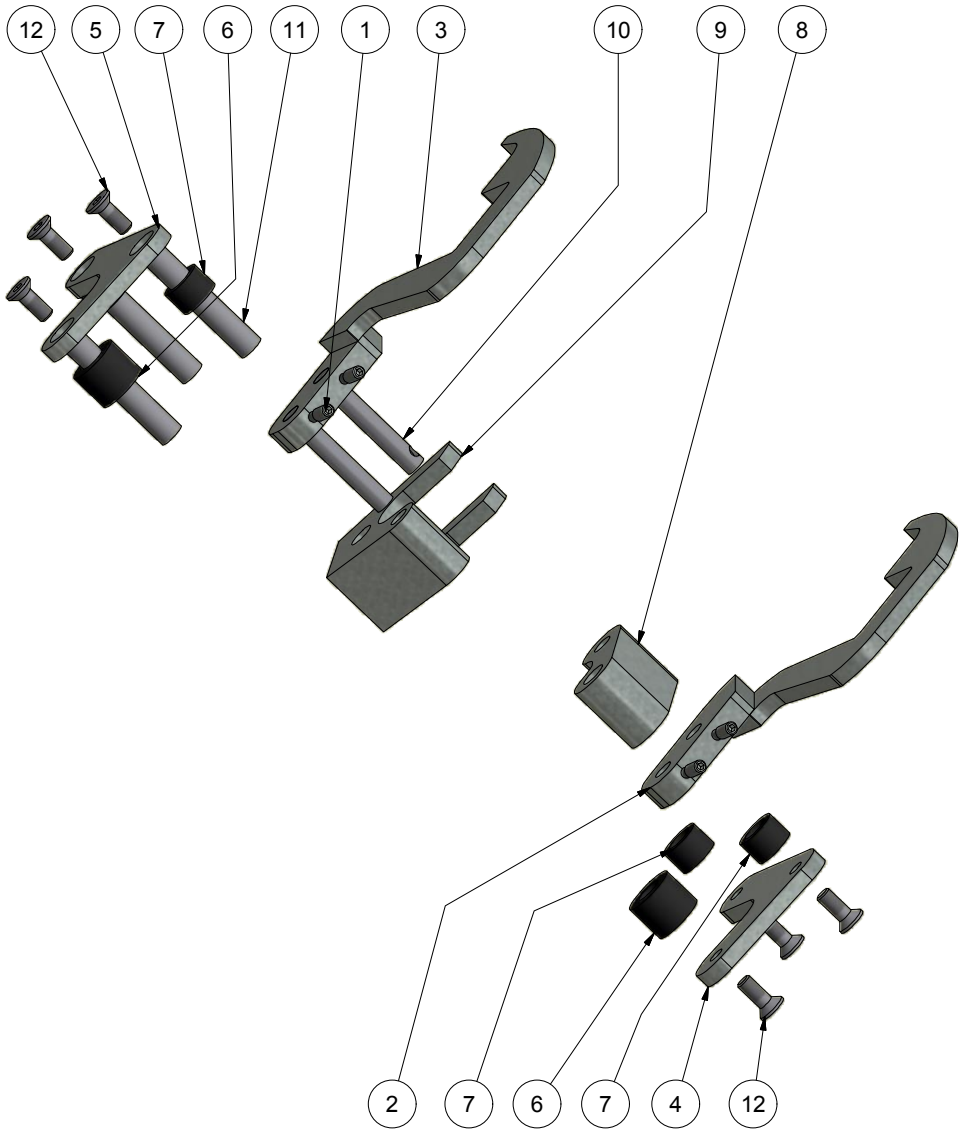

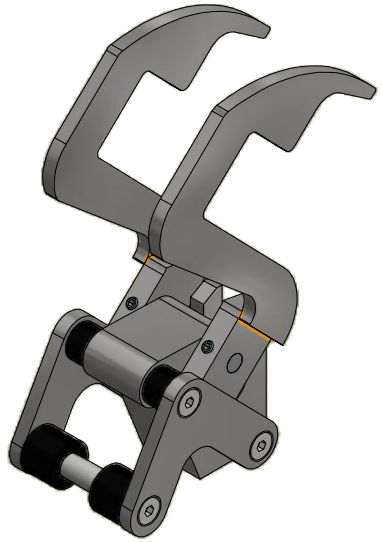

Parts List

ITEM	QTY	PART NUMBER	DESCRIPTION
1	4	20905010	Stop screw M5x10-F
2	1	30665	Body holder hook left
3	1	30666	Body holder hook right
4	1	30670	Brace for cylinder
5	1	30671	Brace for cylinder
6	2	30680	Bushing for body hook
7	4	30682	Bushing for body hook
8	1	30685	Eccentric for bodyholdsystem
9	1	30690	Bracket f. bodysholdsystem
10	2	30731	Axel for body holder system
11	3	30732	Axel for body holder system
12	6	53406016	Hexagon countersunk head M6x16 12.9

Break all edges

Revision:	Approved	Date:	Revision Description
1	HG	27-09-2015	Revision changed to numeric

The document is strictly confidential and may not be in no account be copied or discloses to any third person.

HEDENSTED GRUPPEN A/S

HEDENSTED GRUPPEN

Scale: 1 : 2

Not specificed tolerance according to: DS/ISO 2768-m

Sheet size: A3

Surface properties:

Sheet: 1 /2

Part No.: 30667

Material:

Description 1: Ass. unit excentric bodyholder

Description 2: (drawing 30667)

Parts List			
ITEM	QTY	PART NUMBER	DESCRIPTION
1	1	20206012	Fitting bolt M6-8x12
2	2	20905005	Stop screw M5x5-F
3	1	210427	Lock nut M10x1,25 FZB
4	1	211010	Cylinder RM/8026/M/160
5	2	215985	Flow control banjo Ø4 x 1/8"
6	1	30725	Axle f. pipe - bodyholder lock
7	1	M100551	Guide for bodyholder - QC
8	1	M100552	Roundbar for lock - QC

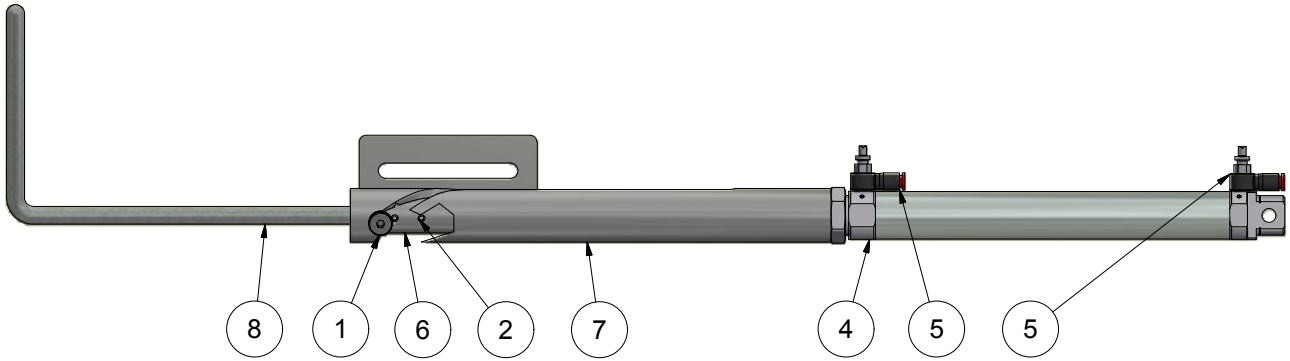

Break all edges

Revision:	Approved	Date:	Revision Description
1	HG	28-09-2015	Revision changed to numeric

This document is strictly confidential and may no account be copied or disclosed to any third person HEDENSTED GRUPPEN A/S

HEDENSTED GRUPPEN

Scale: 1 : 3	Not specificed tolerance according to: DS/ISO 2768-m		Sheet size: A3
	Surface properties:		Sheet: 1 /2
Part No.: 30718	Material: Welded Steel Mild		
Description 1: Assembly bodyholder QC			
Description 2: For Quick Cut			

PARTS LIST			
ITEM	QTY	PART NUMBER	DESCRIPTION
1	4	10206020	Hexagon cylinder head M6x20 FZB
2	1	212110	Cylinder PRA/182032/M/320
3	1	214115	F-Joint QM-8025-25
4	1	214158	L-Joint QA-8032-24
5	1	215655	Flow control banjo Ø6 x 1-8" CYL IN
6	1	215760	Elbow swirvel Ø6 x 1/8"

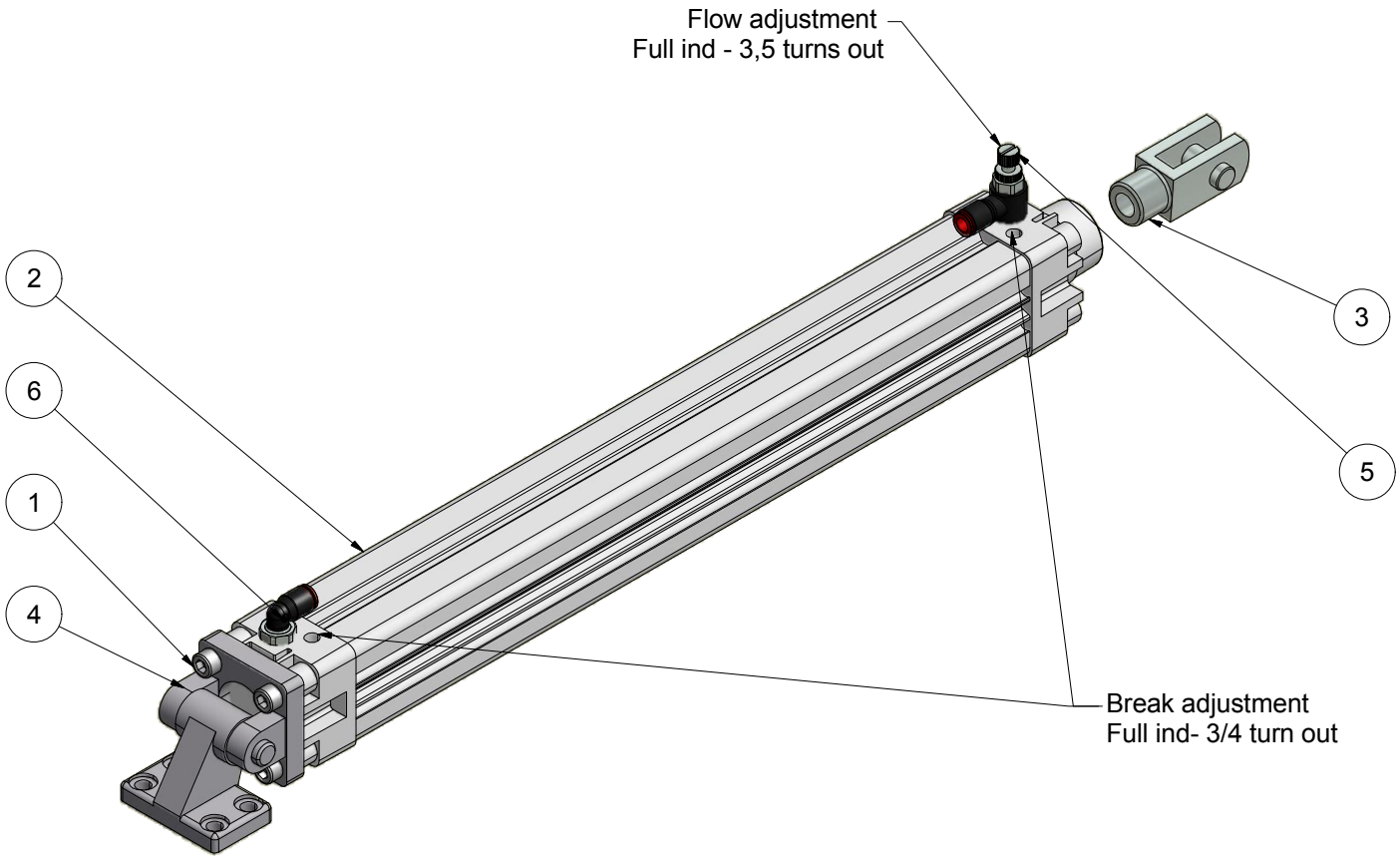

Break all edges

Revision:	Approved	Date:	Revision Description
1	HG	28-09-2015	Revision changed to numeric

The document is strictly confidential and may in no account be copied or discloses to any third person.
HEDENSTED GRUPPEN A/S

HEDENSTED GRUPPEN

Scale: 1 : 2	Not specificed tolerance according to: DS/ISO 2768-m	Sheet size: A3
	Surface properties: No	Sheet: 1 /1
Part No.: 210179	Material:	
Description 1: Cylinder for paw stretch		
Description 2: Combi cut		

Parts List			
ITEM	QTY	PART NUMBER	DESCRIPTION
1	2	10203008	Hexagon cylinder head M3x08 FZB
2	3	10205020	Hexagon cylinder head M5x20 FZB
3	1	10506010	Stop screw M6x10-B
4	4	20406012	Hexagon countersunk head M6x12 FZB
5	1	207956	Encoder Ø8 hole 500p
6	1	207957	Cable w. plug M12 8P 5M
7	1	30171	Shaft for encoder
8	1	30174	Bracket for encoder
9	1	30260	Pulley AT5-Z48
10	1	30261	Hub for encoder
11	1	30269	Mountingplate for AT5 Pulley
12	1	30300	Flange for AT5 pulley
13	1	473038	Bearing Ø20xØ47x14
14	2	82103000	Washer M3 FZB
15	3	82105900	Washer M5 FZB
16	1	89720000	Seeger ring for shaft Ø20
17	1	89847000	Seeger ring for hole Ø47

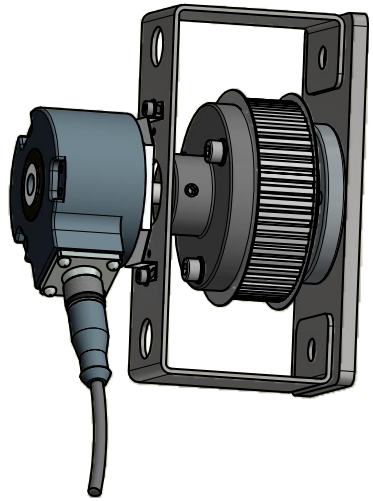

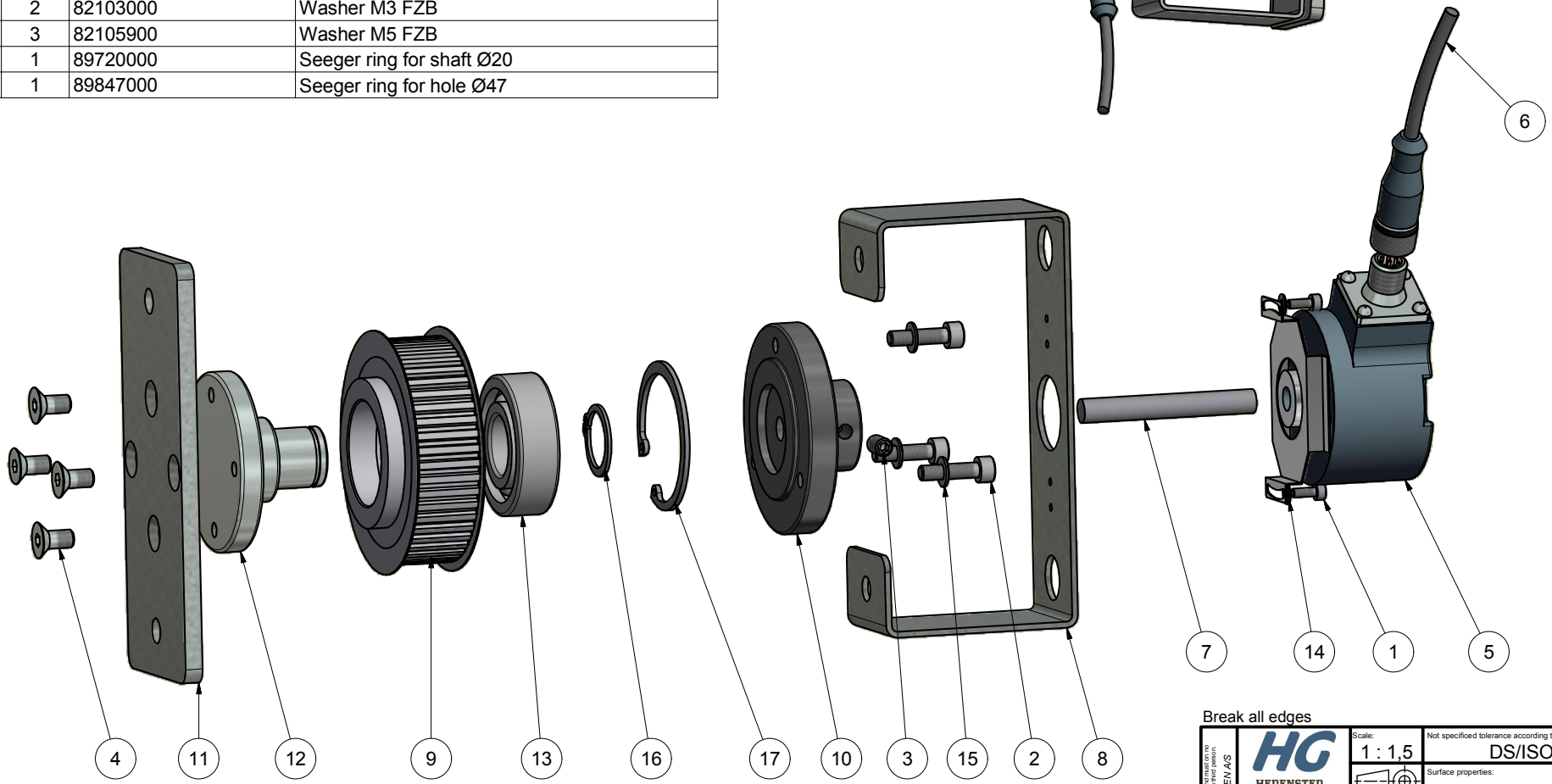

Break all edges

Revision:	Approved	Date:	Revision Description
1	HG	27-09-2015	Revision changed to numeric

The document is strictly confidential and may not be in no account be copied or discloses to any third person.
HEDENSTED GRUPPEN A/S

HEDENSTED GRUPPEN

Scale: 1 : 1,5	Not specificed tolerance according to: DS/ISO 2768-m	Sheet size: A3
	Surface properties:	Sheet: 1 /2
Part No.: 30262	Material:	
Description 1: Assembly AT5 pulley		
Description 2: fixed end		

Parts List			
ITEM	QTY	PART NUMBER	DESCRIPTION
1	4	20406012	Hexagon countersunk head M6x12 FZB
2	1	30260	Pulley AT5-Z48
3	1	30275	Mounting plate for AT5 pulley
4	1	30300	Flange for AT5 pulley
5	1	473038	Bearing 6204 2 RS1
6	1	89720000	Seeger ring for shaft Ø20 din 471
7	1	89847000	Seeger ring for bore Ø47 din 472

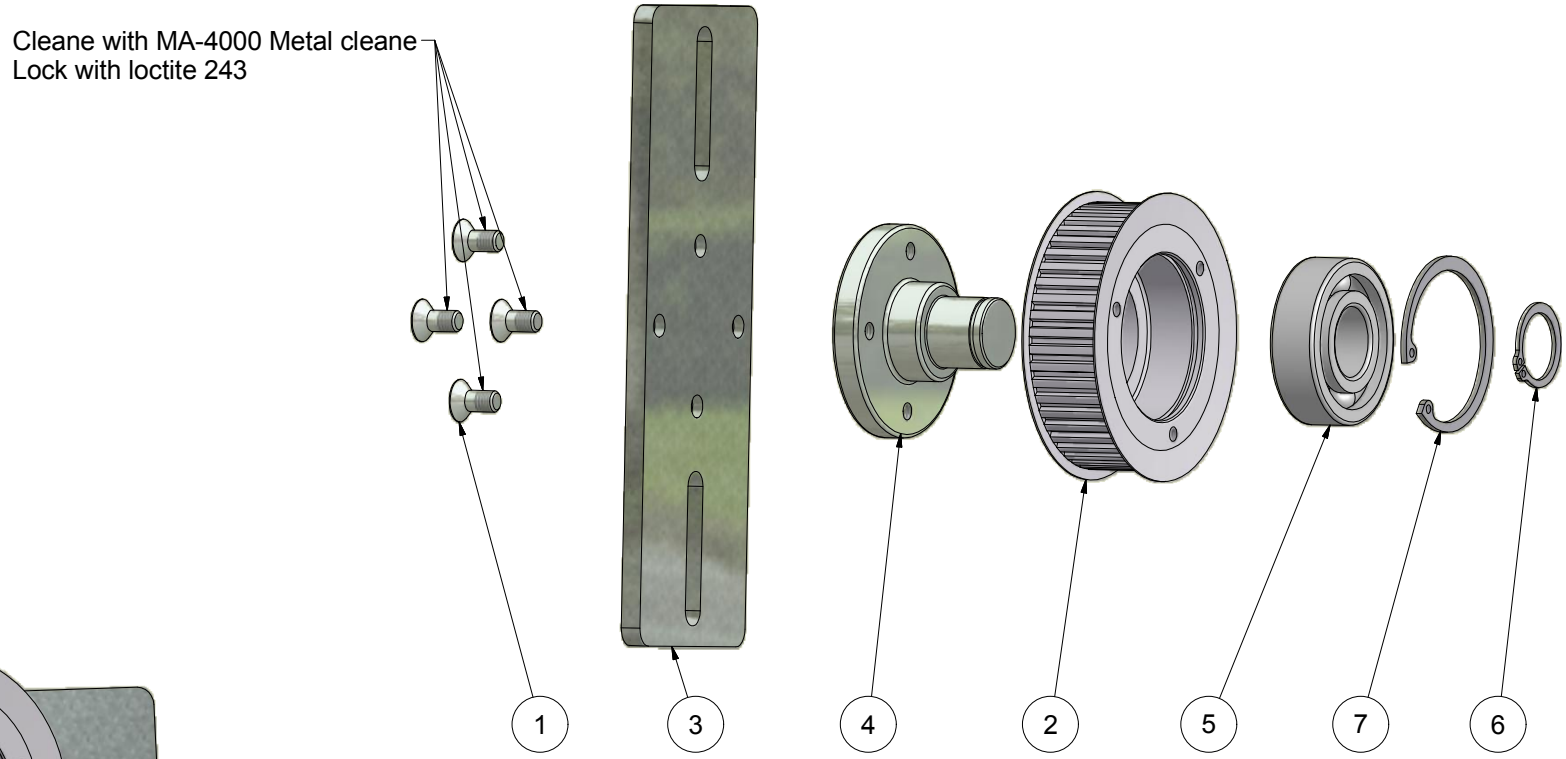

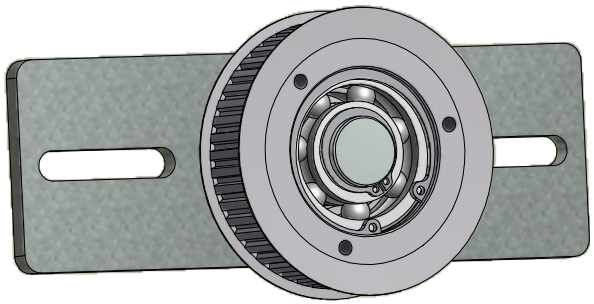

Break all edges

Revision:	Approved	Date:	Revision Description
1	HG	28-09-2015	Revision changed to numeric

The document is strictly confidential and may in no account be copied or discloses to any third person.
HEDENSTED GRUPPEN A/S

HEDENSTED GRUPPEN

Scale: 1 : 1,5	Not specificed tolerance according to: DS/ISO 2768-m		Sheet size: A3
	Surface properties:		Sheet: 1 /1
Part No.: 30263	Material:		
Description 1: Assembly pulley AT5			
Description 2:			

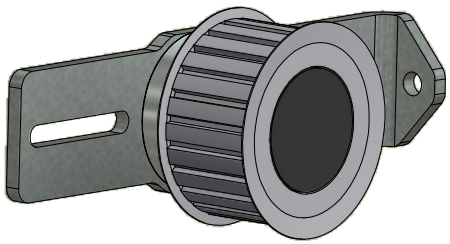

Parts List			
ITEM	QTY	PART NUMBER	DESCRIPTION
1	4	20406012	Hexagon countersunk head M6x12 FZB
2	1	207938	Cover for bearing 47-7 NBR
3	1	30264	Adjustable plate for vertical
4	1	30273	Pulley 50AT10/24-2
5	1	30305	Flange for AT10 pulley
6	1	473320	Double-row bearing 4204
7	1	89720000	Seeger ring for shaft Ø20 din 471
8	1	89847000	Seeger ring for bore Ø47 din 472

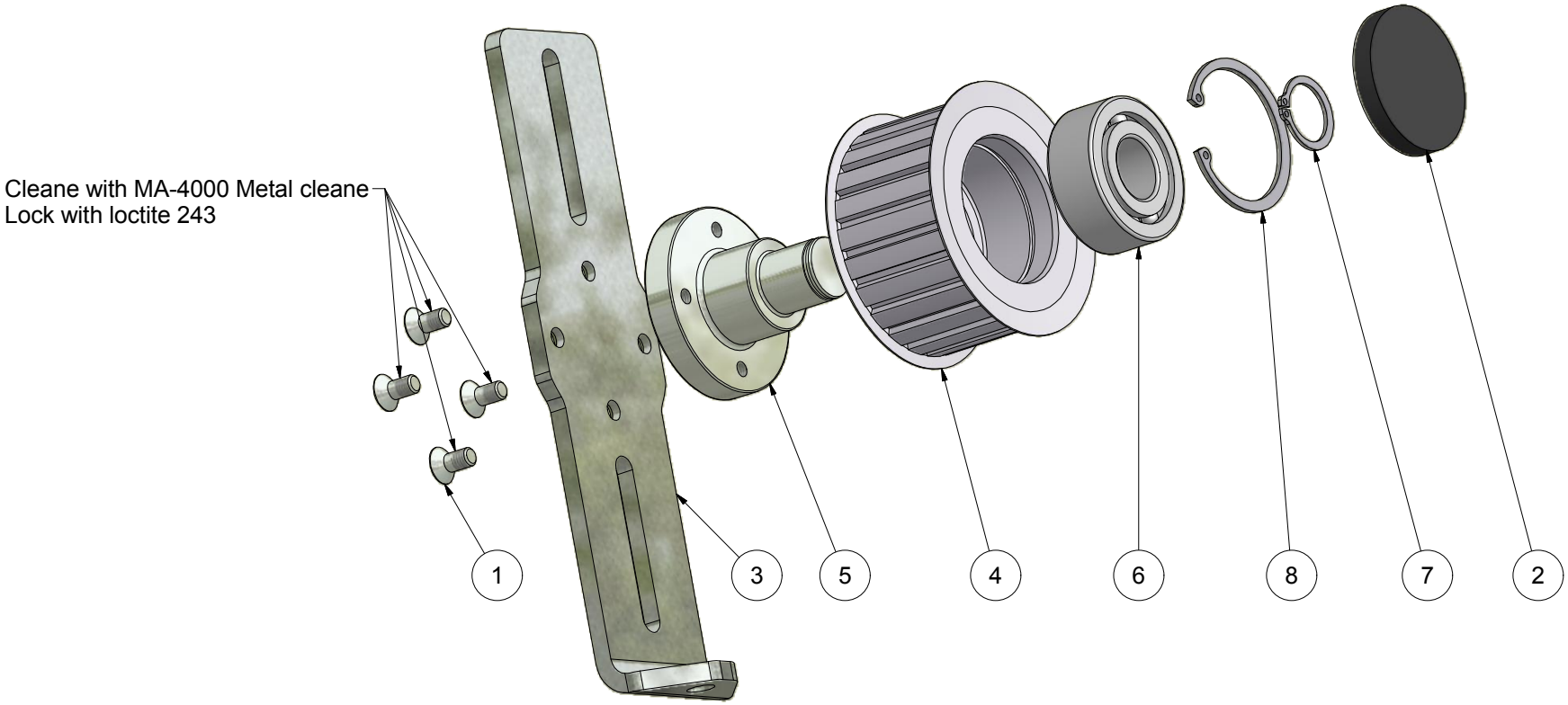

Break all edges

Revision:	Approved	Date:	Revision Description
1	HG	28-09-2015	Revision changed to numeric

The document is strictly confidential and may in no account be copied or discloses to any third person.
HEDENSTED GRUPPEN A/S

HEDENSTED GRUPPEN

Scale: 1 : 1,5	Not specificed tolerance according to: DS/ISO 2768-m		Sheet size: A3
	Surface properties:		Sheet: 1 /1
Part No.: 30270	Material:		
Description 1: Assembly AT10 pulley			
Description 2:			

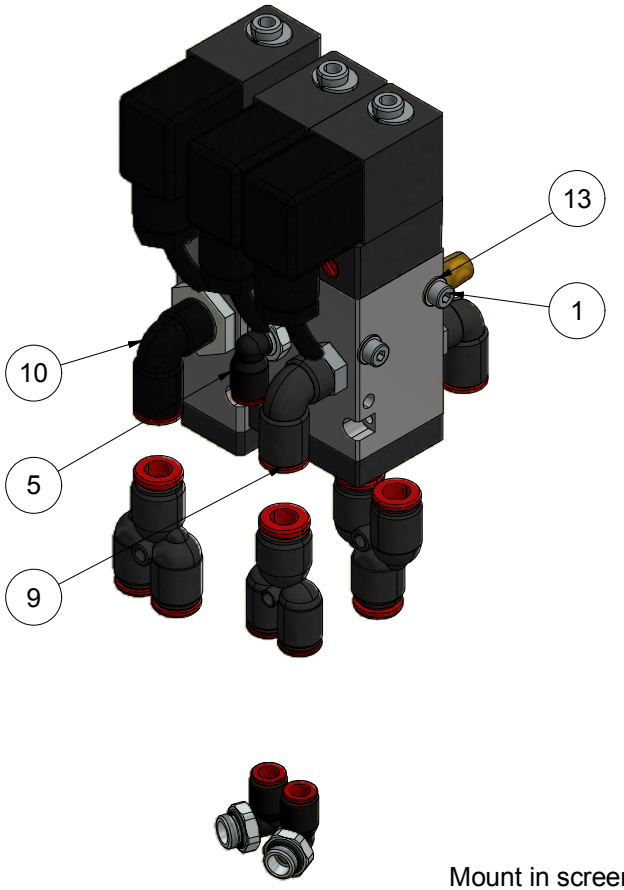

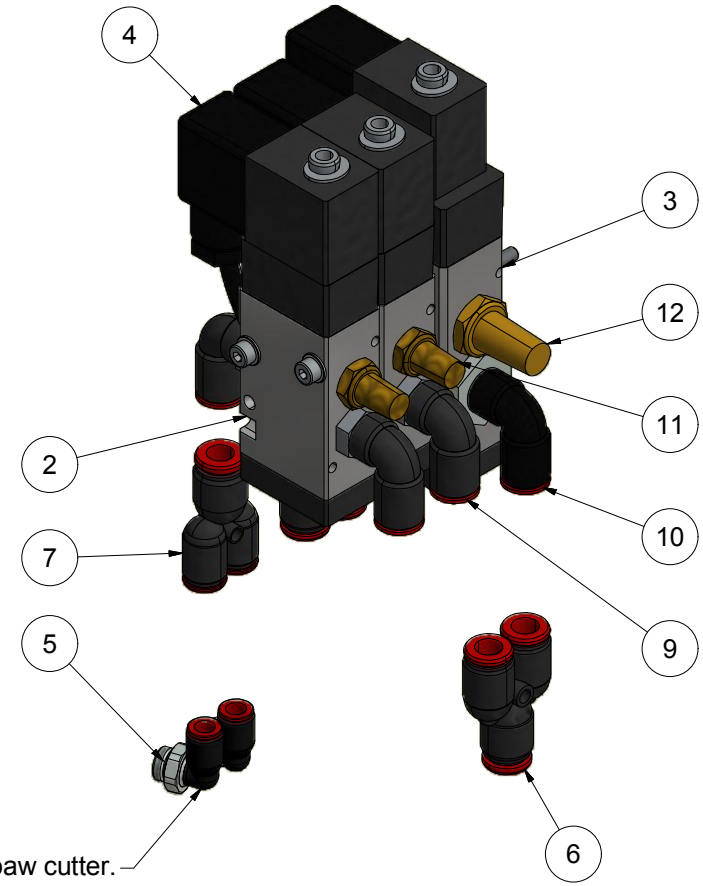

Mount in screen on paw cutter.

216424 is cut to 4x 150mm
Connect between fittings

PARTS LIST

ITEM	QTY	PART NUMBER	DESCRIPTION
1	2	11104080	Hexagon cylinder head M4x80 FZB
2	2	215040	Valve 3/2 1/8" 24VDC/Spring
3	1	215047	Valve 3/2 1/4" 24VDC/Spring
4	3	215184	Cable w. elbow plug 22mm 3P 3M 250v
5	3	215760	Elbow swirvel Ø6 x 1/8"
6	2	215870	Y-connector 2xØ8 x Ø8
7	1	215875	Y-connector 2xØ6 x Ø8
8	0,6 m	216124	Air hose Ø8mm PUR Blue
9	3	216536	Elbow swivel Ø8 x 1/8"
10	2	216537	Elbow swivel Ø8 x 1/4"
11	2	216796	Filter sintered 1/8”
12	1	216797	Filter sintered 1/4"
13	2	82104000	Washer M4 FZB

Break all edges

Revision:	Approved	Date:	Revision Description
1	HG	27-09-2015	Revision changed to numeric

The document is strictly confidential and may in no account be copied or discloses to any third person.
HEDENSTED GRUPPEN A/S

HEDENSTED GRUPPEN

Scale: 1 : 1,5	Not specificed tolerance according to: DS/ISO 2768-m		Sheet size: A3
	Surface properties: No		Sheet: 1 /1
Part No.: 210183	Material:		
Description 1: Valve assembly			
Description 2: valves for combi cut			

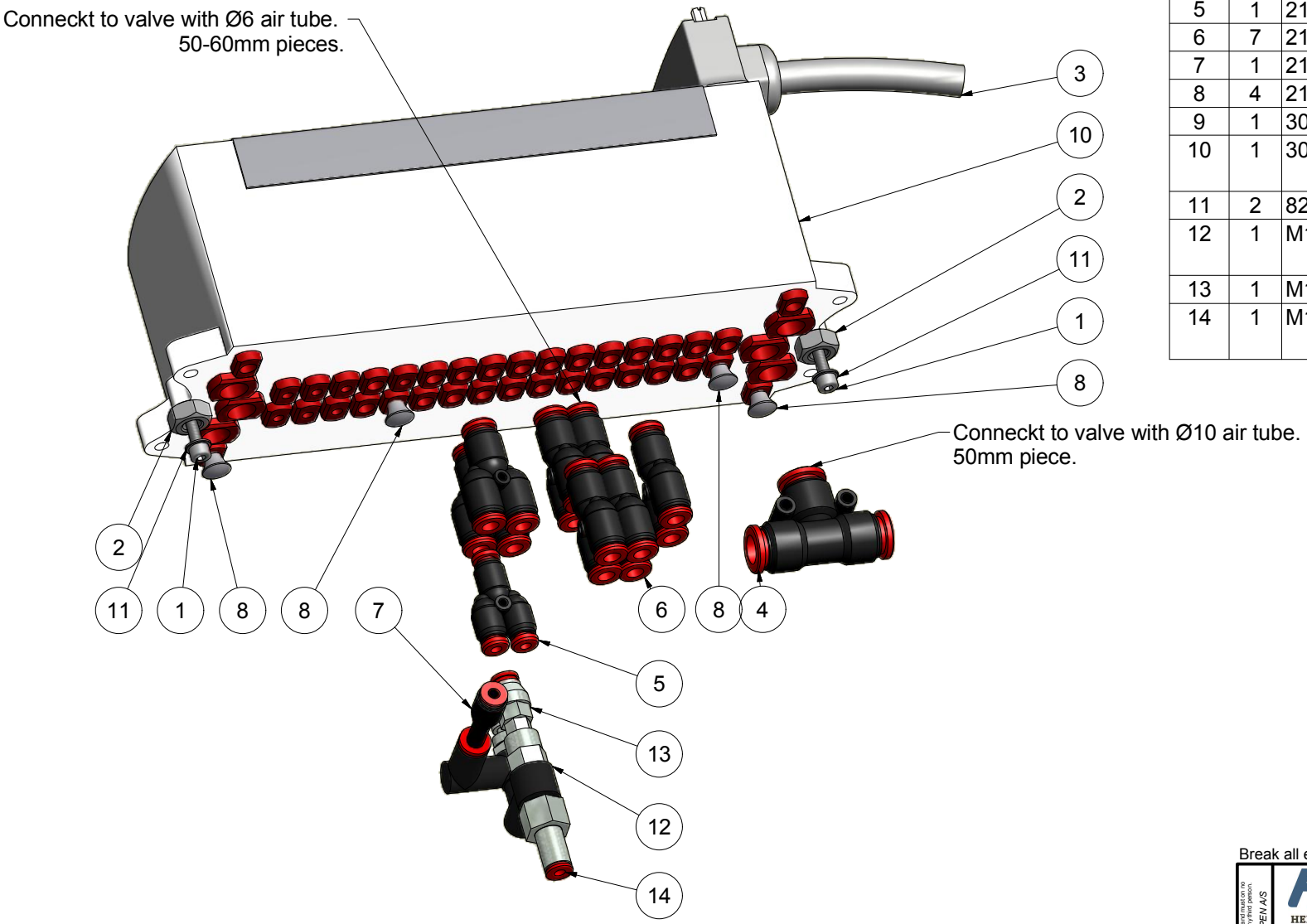

PARTS LIST			
ITEM	QTY	PART NUMBER	DESCRIPTION
1	2	10204016	Hexagon cylinder head M4x16 FZB
2	2	1508000	Nut M8 FZB
3	1	215172	Cable with plug 3m VM10, Sub44, 90gr
4	1	215855	Tee Ø10 x Ø10 x Ø10
5	1	215857	Y-connector 2xØ4 x Ø4
6	7	215860	Y-connector 2xØ6 x Ø6
7	1	216684	Reduction stem Ø6 pipe x Ø4
8	4	216748	Plug Ø6 mm
9	1	30168	Shield for VM10 valve
10	1	30302	Valve block VM10 24VDC 16-valves
11	2	82104000	Washer M4 FZB
12	1	M102017	Valve no-return, pilot opreated, Ø6 x 1/8"t
13	1	M102029	Straight connector Ø4 x M5
14	1	M102030	Straight connector Ø4 x female 1/8"

Break all edges

Revision:	Approved	Date:	Revision Description
2	KL	25-04-2016	No-return valve added for cross cut

The document is strictly confidential and may in no account be copied or discloses to any third person HEDENSTED GRUPPEN A/S

HEDENSTED GRUPPEN

Scale: 1 : 1,5	Not specificed tolerance according to: DS/ISO 2768-m	Sheet size: A3
	Surface properties: No	Sheet: 1 /1
Part No.: 210184	Material:	
Description 1: Assembly VM10 valve for CC2010		
Description 2:		

PARTS LIST			
ITEM	QTY	PART NUMBER	DESCRIPTION
1	1	210189	Brace for filter
2	1	210191	Air filter 0,01My
3	1	216682	Reduction stem Ø10 - Ø8
4	1	216386	Tee Ø10 x 3/8" xØ10
5	1	215780	Elbow swirvel Ø10 x 3/8"

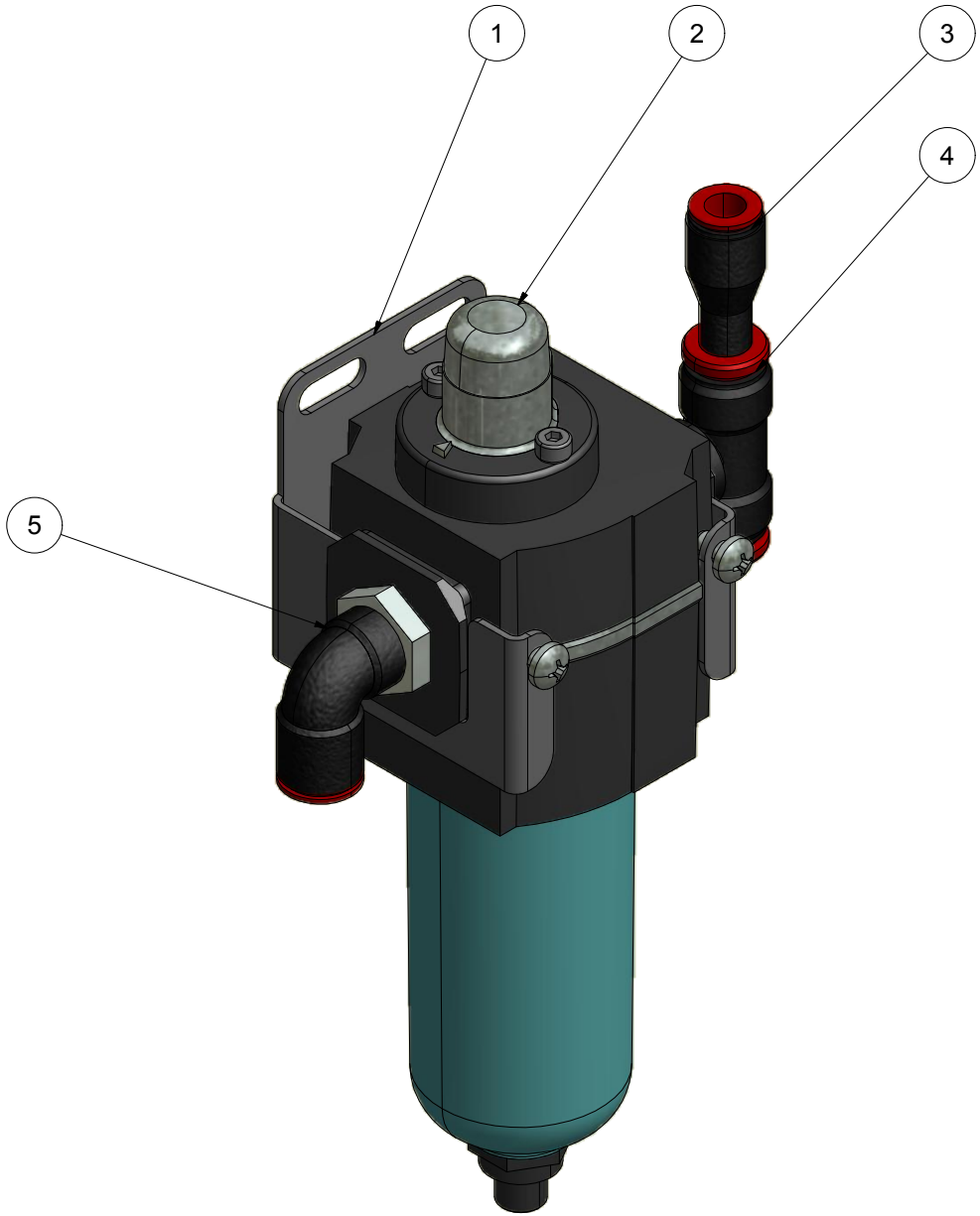

Break all edges

Revision:	Approved	Date:	Revision Description
1	HG	28-09-2015	Revision changed to numeric

The document is strictly confidential and may on no account be copied or disclosed to any third person.
HEDENSTED GRUPPEN A/S

HEDENSTED GRUPPEN

Scale: 1 : 1	Not specificed tolerance according to: DS/ISO 2768-m		Sheet size: A3
	Surface properties: No		Sheet: 1 /1
Part No.: 210187	Material:		
Description 1: Filter assembly			
Description 2: Combi cut			

Parts List			
ITEM	QTY	PART NUMBER	DESCRIPTION
1	1	30385	Guide for pawholder
2	1	30380	Angle bracket for
3	2	11408020	Hexagon bolt M8x20 FZB
4	2	82108000	Chamfered Washer M8 FZB

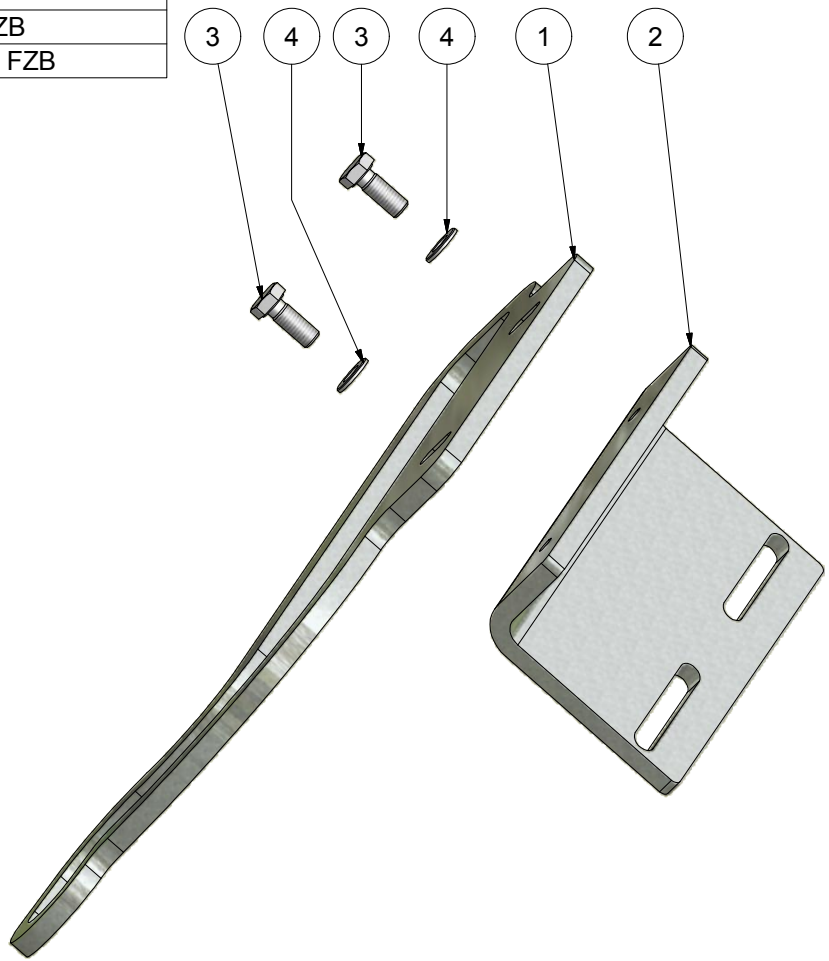

Break all edges

Revision:	Approved	Date:	Revision Description
1	HG	28-09-2015	Revision changed to numeric

The document is strictly confidential and can in no account be copied or discloses to any third person.
HEDENSTED GRUPPEN A/S

HEDENSTED GRUPPEN

Scale: 1 : 2	Not specificed tolerance according to: DS/ISO 2768-m		Sheet size: A3
	Surface properties:		Sheet: 1 /1
Part No.: 30381	Material:		
Description 1: Assembly curve for pawholder			
Description 2: left			

Parts List			
ITEM	QTY	PART NUMBER	DESCRIPTION
1	1	30380	Angle bracket for
2	1	30385	Guide for pawholder
3	2	82108000	Chamfered Washer M8 FZB
4	2	11408020	Hexagon bolt M8x20 FZB

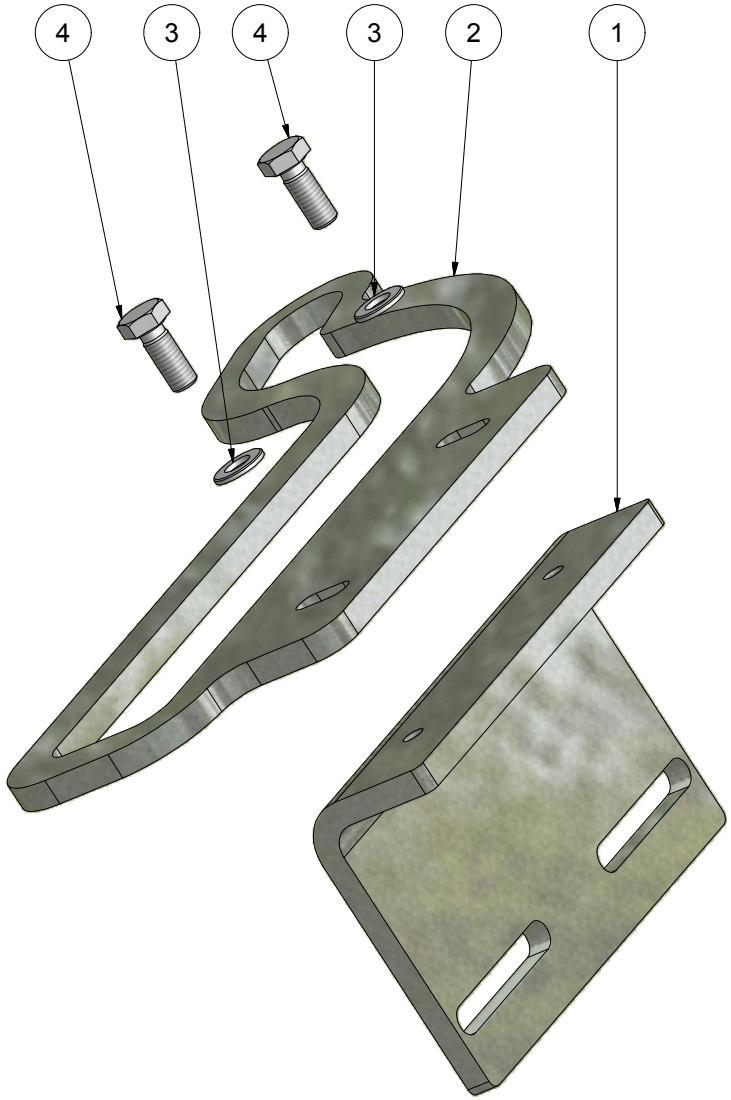

Break all edges

Revision:	Approved	Date:	Revision Description
1	HG	28-09-2015	Revision changed to numeric

The document is strictly confidential and can in no account be copied or discloses to any third person.
HEDENSTED GRUPPEN A/S

HEDENSTED GRUPPEN

Scale: 1 : 1,5	Not specificed tolerance according to: DS/ISO 2768-m		Sheet size: A3
	Surface properties:		Sheet: 1 /1
Part No.: 30382	Material:		
Description 1: Assembly curve for pawholder			
Description 2: right			

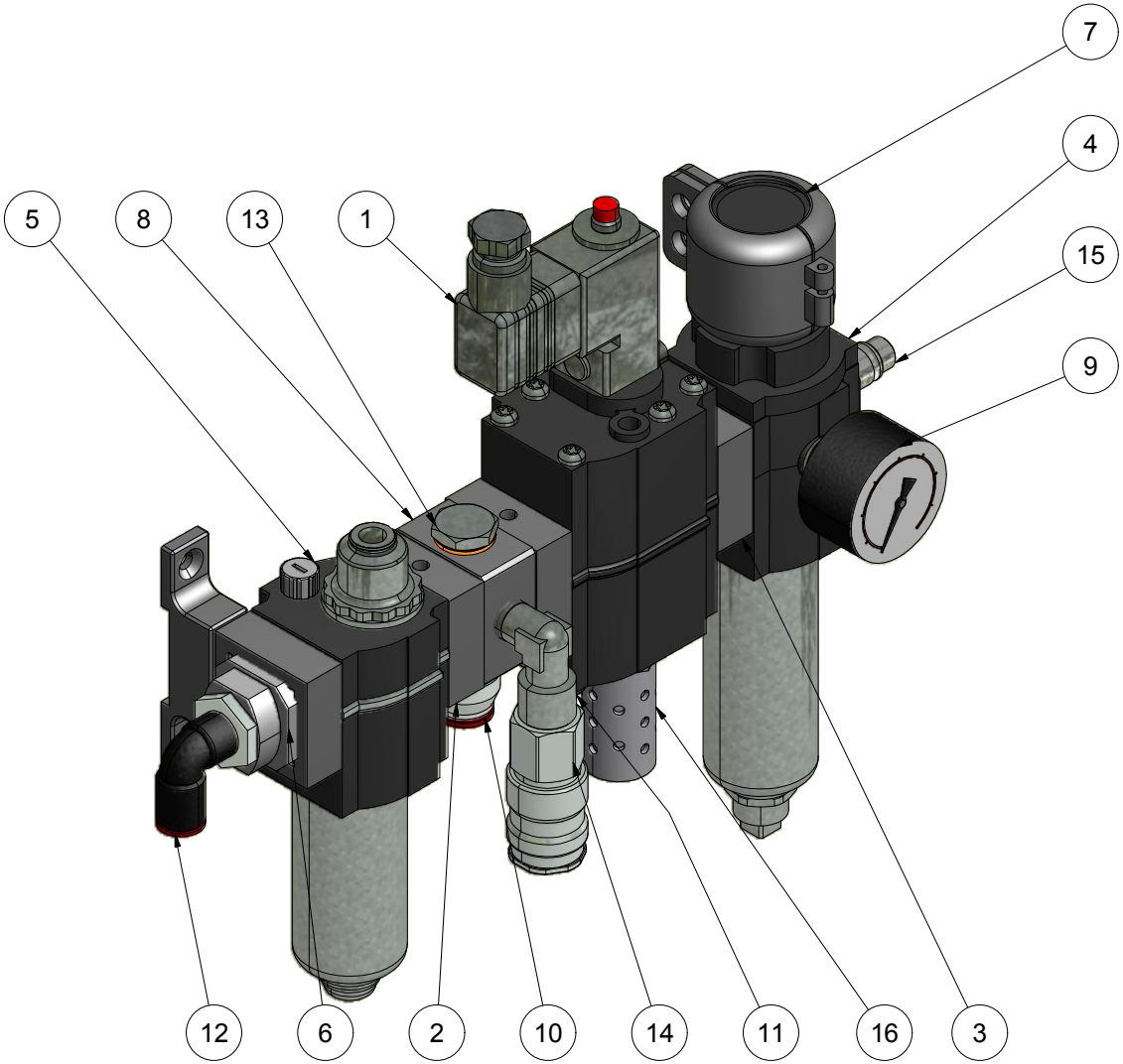

PARTS LIST

ITEM	QTY	PART NUMBER	DESCRIPTION
1	1	197322	Valve Soft starter 1/4" 24VDC
2	2	210175	Quick clamp 72 series
3	2	210176	Wall bracket with clamp 72 series
4	1	210178	Regulator with filter 1/4" 0,3-10 bar (AutoDrain)
5	1	210185	Sight feed lubricator 1/4"
6	1	210195	Connection block 1/4" for B72 serie
7	1	210196	Cover for regulator
8	1	210198	Connection block for B72 serie
9	1	215550	Gauge 0-10 bar 1/8" Ø40
10	1	215940	Straight connector Ø10 x 1/4"
11	1	216358	Elbow 1/4"t x 1/4" (M/F)
12	1	216537	Elbow swivel Ø8 x 1/4"
13	1	216739	Plug flange 1/4" w. gasket
14	1	217020	Quick release coupling Socket 1/4" male
15	1	217051	Quick release coupling Plug 1/4" male
16	1	M102031	Filter silencer 1/4"

Break all edges

Revision:	Approved	Date:	Revision Description
2	KL	13-04-2016	Made

The document is strictly confidential and may in no account be copied or disclosed to any third person.
HEDENSTED GRUPPEN A/S

HEDENSTED GRUPPEN

Scale: 1 : 1,5

Not specificed tolerance according to: DS/ISO 2768-m

Sheet size: A3

Surface properties: No

Sheet: 1 /1

Part No.: M102016

Material:

Description 1: Air connection unit CC & QC 2016

Description 2: Filter, oiler, softstart and reduc. manom

PARTS LIST			
ITEM	QTY	PART NUMBER	DESCRIPTION
1	1	30119	Electric mount CC 2010
2	1	30834	Labels for Combi 2010
3	1	600100	Push button Emergency stop
4	1	600164	Push botton red ZB4BA4
5	1	600176	Switch block 1NO ZB4BZ101
6	1	600302	Box metal 300x400x150
7	1	600335	Push button yellow 1NO XB4BA51
8	1	600340	Push button blue 1NO XB4BA61
9	1	600355	Light 24VAC/DC white XB4BVB1
10	1	600358	Main switch VBF-01 20A 3P Black
11	1	600359	Main switch zero terminal VZ-11
12	1	600367	Cabel for T-series HMI, CAB103/3M
13	1	600369	Main switch ground terminall VZ-14
14	1	600375	Switch block ZB4BZ104 2NC
15	4	600465	Cable gland M25 Ø7-14
16	4	600480	Cable gland nut polyamid M25
17	8	600550	Terminal block WDU_2,5
18	2	600555	End plate WAP 2,5-10
19	2	600585	Terminal block WPE 2,5
20	2	600590	End bracket EW 35
21	1	600926	Panel, touch 7" X2 Base 7 - F2

Mounting:
1) Remove the lock from the lid.
2) Mount the label. Hole for lock in label and lid must be in line.
3) Mount the lock again.
4) Make the holes in the lid according to the markings on the label, and other holes according to drawing.
5) Mount the components.

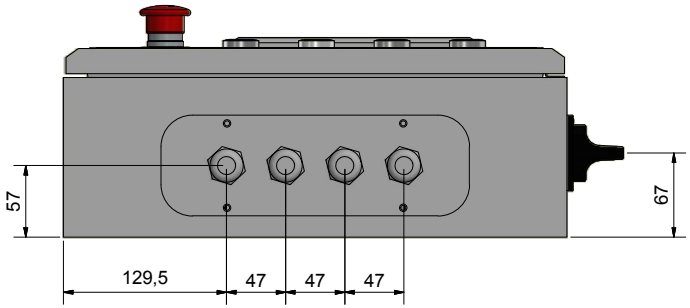

C-C (1 : 3)

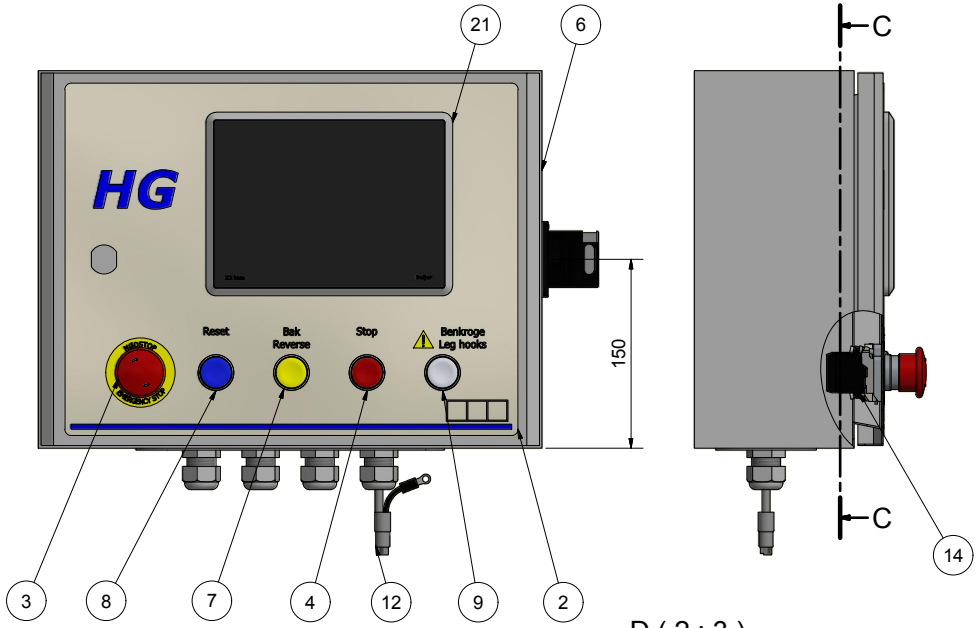

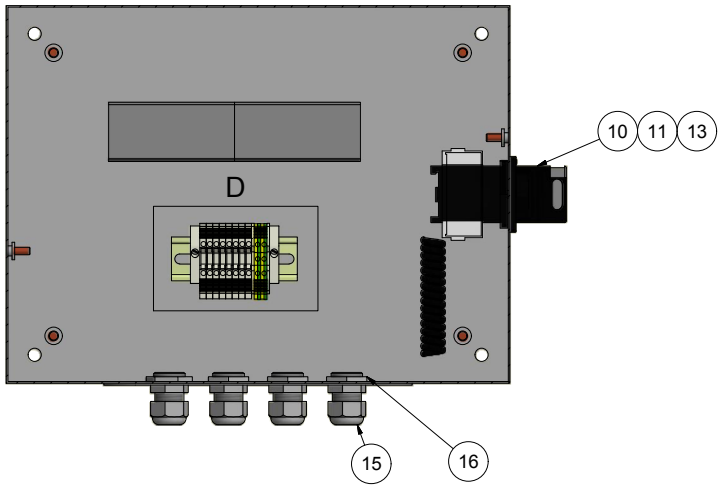

D (2 : 3)

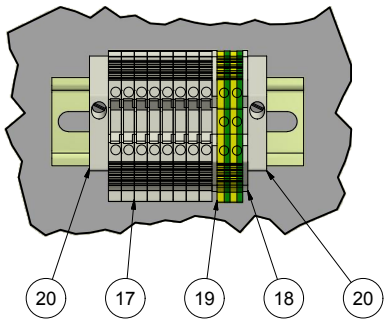

Break all edges

Revision:	Approved	Date:	Revision Description
3	KKS	04-07-2017	Part List Updated

This drawing is strictly confidential and must not be copied or disclosed to third parties without written consent of HEDENSTED GRUPPEN A/S

HEDENSTED GRUPPEN

Scale: 1 : 3	Not specified tolerance according to: DS/ISO 2768-m	Sheet size: A2
	Surface properties: No	Sheet: 1 /2
Part No.: 600303	Material:	
Description 1: Cabinet assembly 300x400x150		
Description 2: Combi cut		

PARTS LIST			
ITEM	QTY	PART NUMBER	DESCRIPTION
1	1	206731	Safety controller 24VAC/DC Cat3
2	1	30109	Electricity instalation CC2010
3	17	600112	Terminal block DLD 2.5/35
4	1	600125	End plate AP-DLD nr 131766
5	4	600130	Cross connector Q10 no131310
6	1,1 m	600155	Din rail with Holes
7	2	600156	Bracket 45° for DIN rail
8	2	600288	Contactor LP1K1201BD 24VDC
9	1	600305	Box metal 700x500x250
10	1	600313	PLC Mitsubishi, FX3G-40MR/ES
11	1	600314	PLC ext. module, 8 tr. output, FX2N-8EYT-ESS/UL
12	1	600408	PLC ext. module, 2 analog out, FX2N-2DA
13	1	600420	Socket for DIN rail 3P/16A/240V
14	23	600460	Cable gland M16 Ø2,5-8
15	7	600465	Cable gland M25 Ø7-14
16	23	600470	Cable gland nut polyamid M16
17	7	600480	Cable gland nut polyamid M25
18	1,7 m	600485	Cable duct H85xW47 grey
19	50,0 m	600490	Wire H05V2-K 1x0,75mm² Dark Blue
20	12,0 m	600495	Wire H05V2-K 1x0,75mm² White
21	8,0 m	600500	Wire H07V2-K 1x1,5mm² Black
22	5,0 m	600502	Wire H07V2-K 1x1,5mm² Blue
23	7,0 m	600510	Wire H07V2-K 1x1,5mm² Yellow/Green
24	13,0 m	600515	Wire H07V2-K 1x2,5mm² Black
25	2,0 m	600520	Wire H07V2-K 1x2,5mm² Light Blue
26	3,0 m	600525	Wire H07V2-K 1x2,5mm² Yellow/Green
27	500	600530	Pin 0,75mm² white isolation (on strip)
28	40	600540	Pin 1,5mm² Red isolation (on strip)
29	15	600545	Pin 2,5mm² Blue isolation (on strip)
30	18	600550	Terminal block WDU_2,5
31	3	600555	End plate WAP 2,5-10
32	18	600560	Terminal block WDK 2,5
33	1	600565	End plate WAP DK 2,5
34	2	600580	Cross connector WQV 2,5/10 10P
35	2	600585	Terminal block WPE 2,5
36	6	600590	End bracket EW 35
37	1	600615	CEE Wall intake 5P/16A/400V.
38	1	600620	CEE Wall outlet 5P/16A/400V
39	6	600632	Cable shoe 1,5-2,5mm² x Ø6 Blue isolation
40	1	600665	Terminal block PE KM11E
41	204	600685	Label Panduit for Laser
42	4	600812	Label sheet 5-0 47339 blue
43	2	600814	Label sheet 0-5 47339 red
44	2	600930	Socket for RXM2, RXZE2S108M
45	2	600935	Relay 12A 2C/0 w. led RMX2
46	2	600940	Label sheet 5-FWZ 52306 1-10A
47	2	600945	Label sheet 11-20 5-FWZ 52306
48	2	600947	Label sheet 52306 MRK21-30A
49	1	600982	Label sheet 5- L1L2L3+N+PE
50	3	600990	Label sheet 5MM X
51	2	600992	Label sheet 5MM Y
52	1	600993	Label sheet 5MM U1 V1 W1
53	2	601035	Automatic fuse 16A C 1P+N
54	1	601040	Automatic fuse 6A C 1P+N
55	1	601100	Automatic fuse16A C 3P+N
56	1	601275	Power supply 1P 24V 2,5A
57	1	M101746	Freq. inverter 0,37kW 1x230V Emerson
58	2	M101747	Low Leak filter for M200-01
59	1	M102014	Freq. inverter 0,75kW 1x230V Emerson
60	2	M102015	Breake resistance for M200-012 00042A

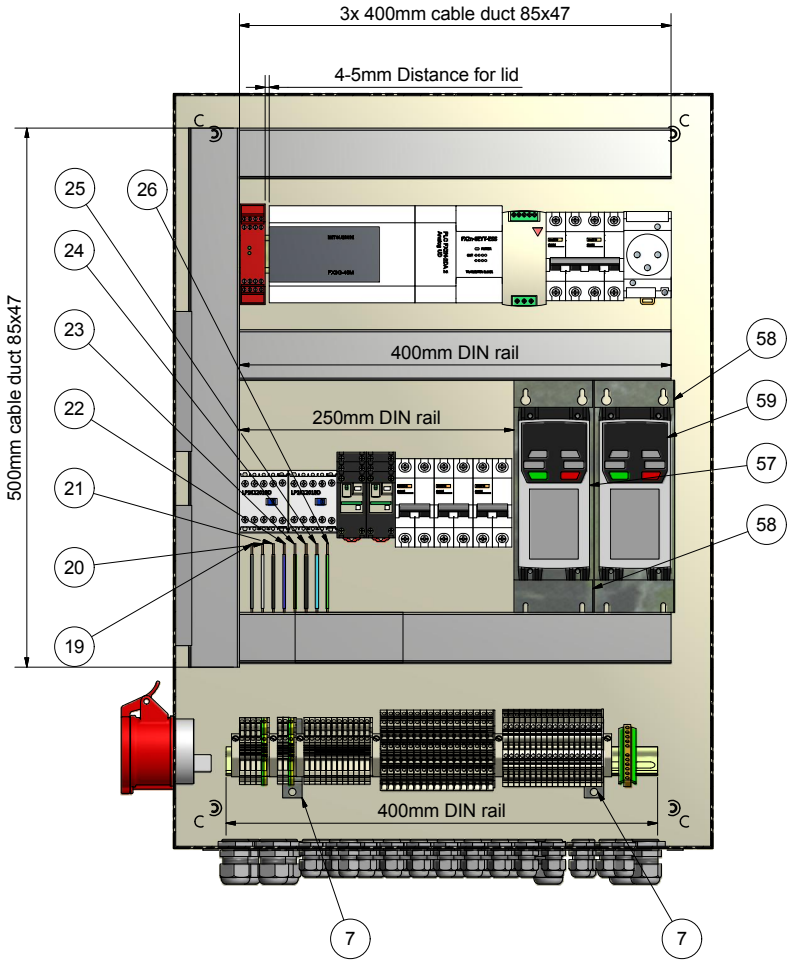

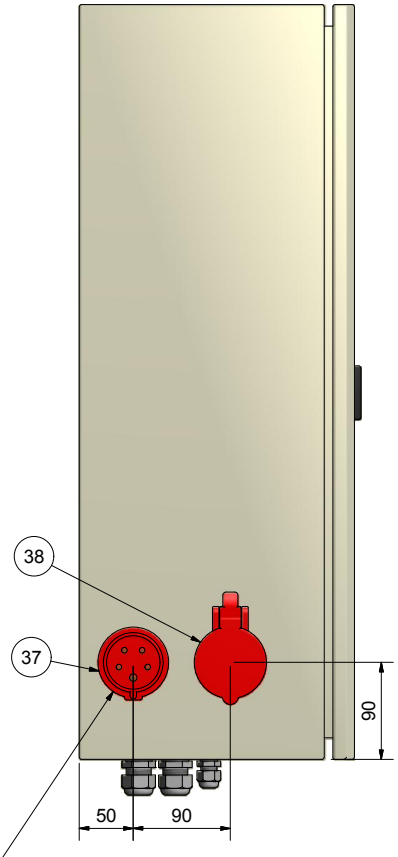

Deliver wall intake loss in box.
Is mounted when cables are connected.

Break all edges

Revision:	Approved	Date:	Revision Description
2	KL	13-04-2016	Inverter changed to M200 + Softstarter added

HEDENSTED GRUPPEN

Scale: 1:3,5	Not specified tolerance according to: DS/ISO 2768-m	Sheet size: A2
	Surface properties: No	Sheet: 1 /3
Part No.: 600932	Material:	
Description 1: Cabinet assembly		
Description 2: Combi cut		

This document is the property of HEDENSTED GRUPPEN A/S. It may not be copied or distributed without written permission.

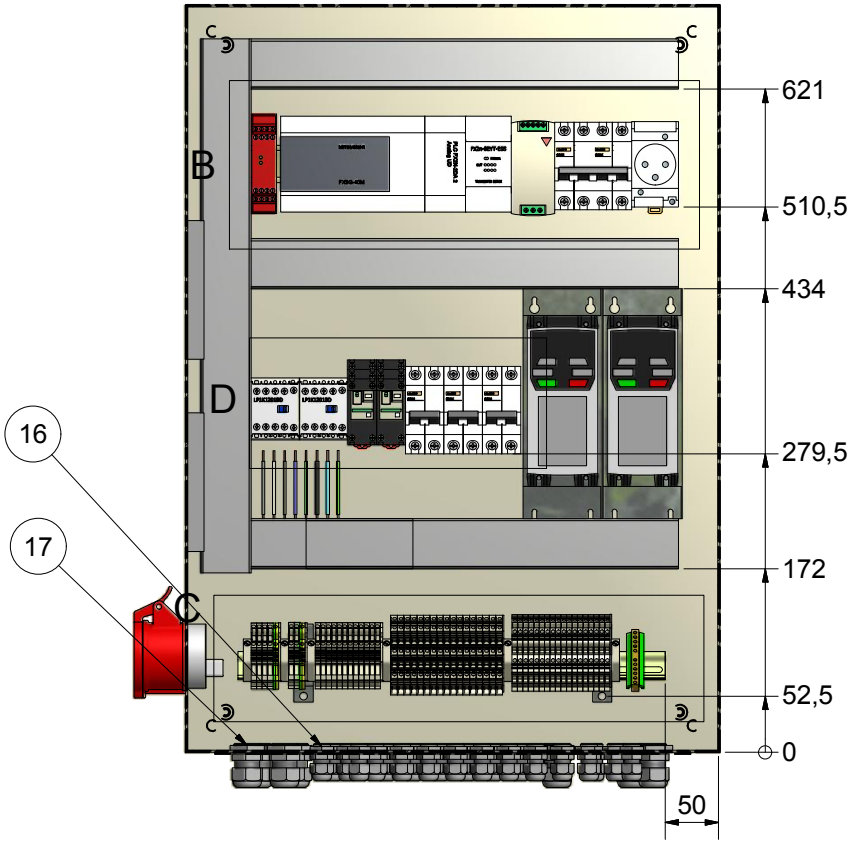

B (1 : 3)

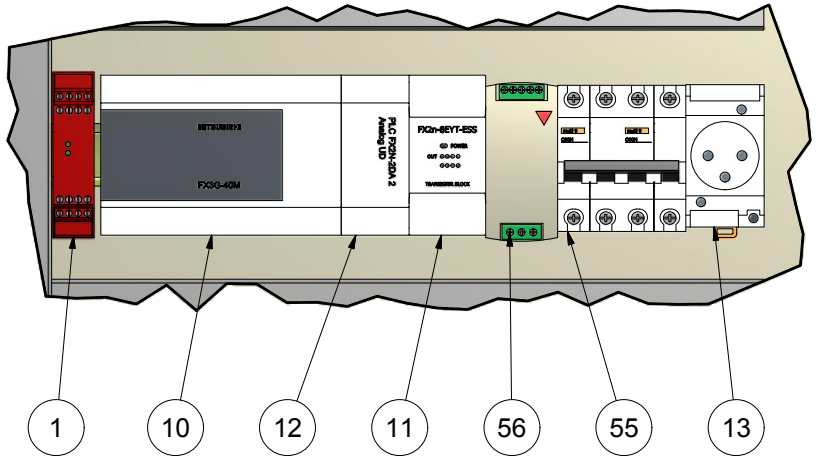

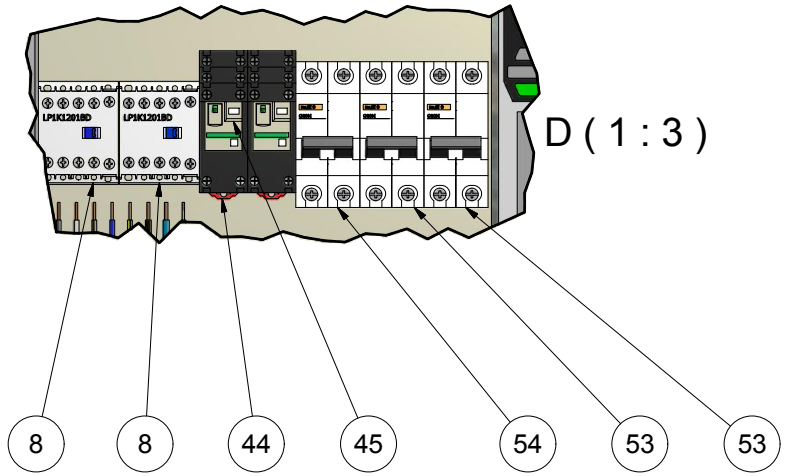

D (1 : 3)

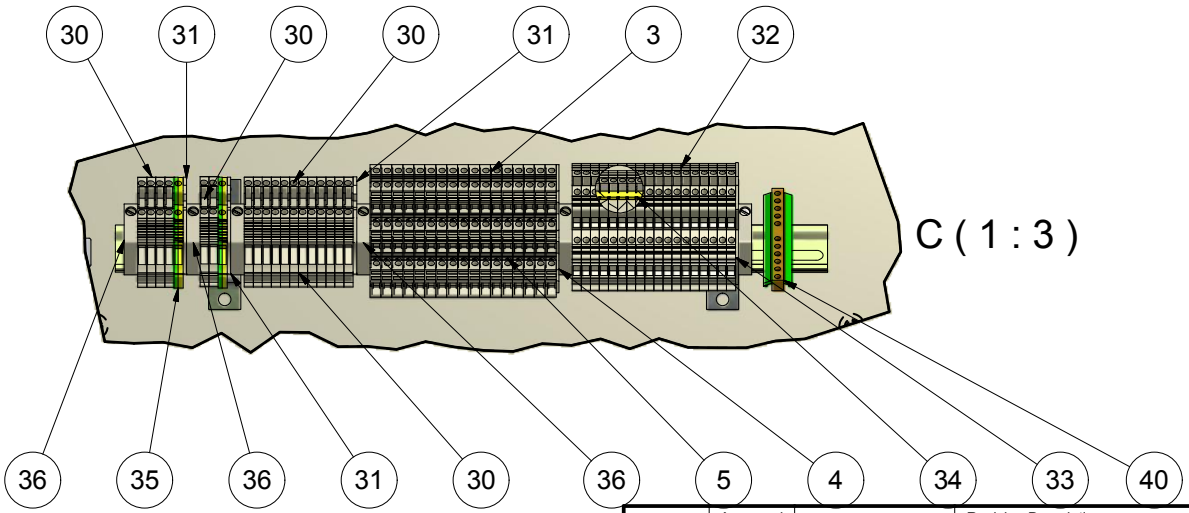

C (1 : 3)

Break all edges

Revision:	Approved	Date:	Revision Description
2	KL	13-04-2016	Inverter changed to M200 + Softstarter added

The document is strictly confidential and may not on no account be copied or discloses to any third person HEDENSTED GRUPPEN A/S

HEDENSTED GRUPPEN

Scale: 1:3,5	Not specificed tolerance according to: DS/ISO 2768-m		Sheet size: A3
	Surface properties: No		Sheet: 2 /3
Part No.: 600932	Material:		
Description 1: Cabinet assembly			
Description 2: Combi cut			

Break resistance mount
(1:5)

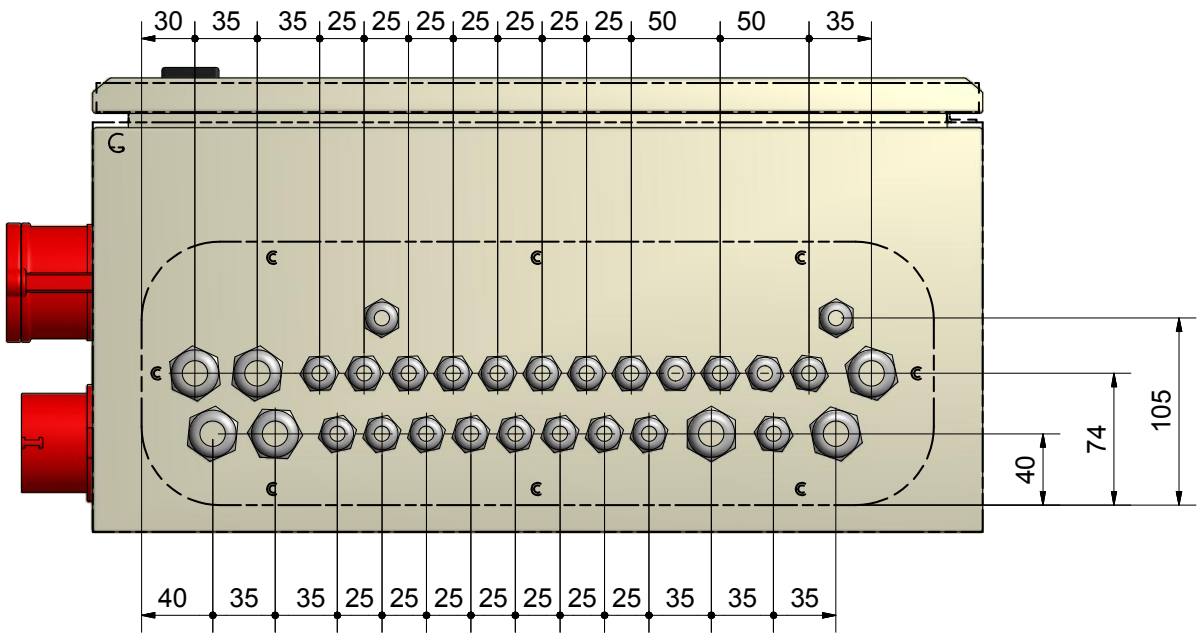

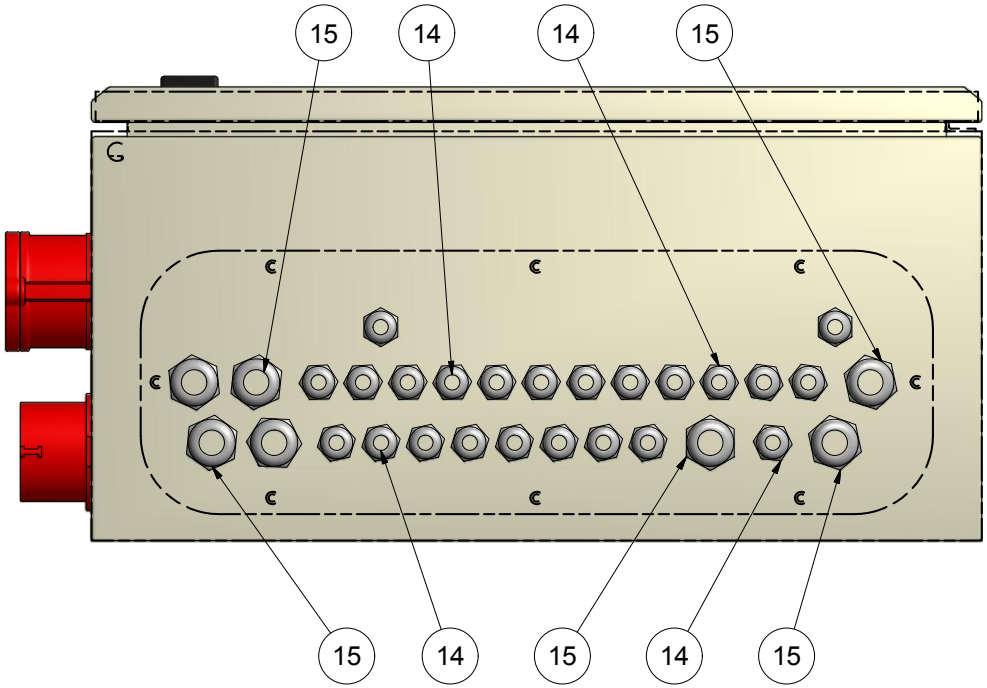

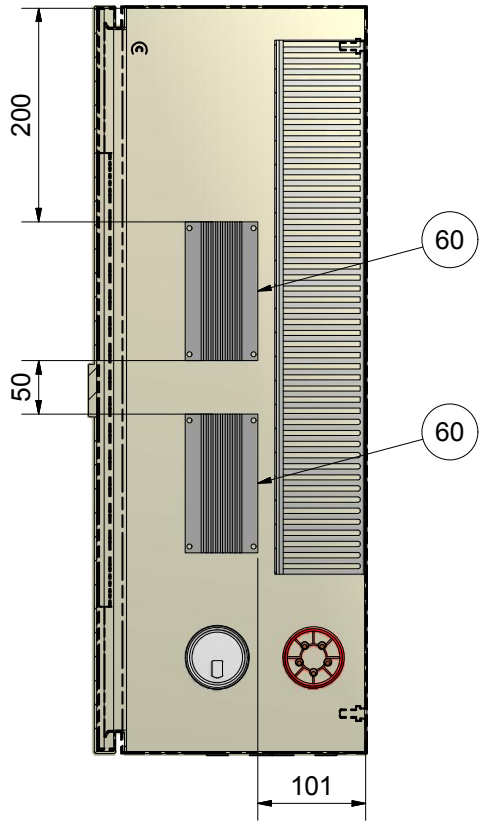

Break all edges

Revision:	Approved	Date:	Revision Description
2	KL	13-04-2016	Inverter changed to M200 + Softstarter added

The document is strictly confidential and may in no account be copied or disclosed to any third person.

HEDENSTED GRUPPEN

HEDENSTED GRUPPEN A/S

Scale: 1:3,5	Not specificed tolerance according to: DS/ISO 2768-m		Sheet size: A3
	Surface properties: No		Sheet: 3 /3
Part No.: 600932	Material:		
Description 1: Cabinet assembly			
Description 2: Combi cut			

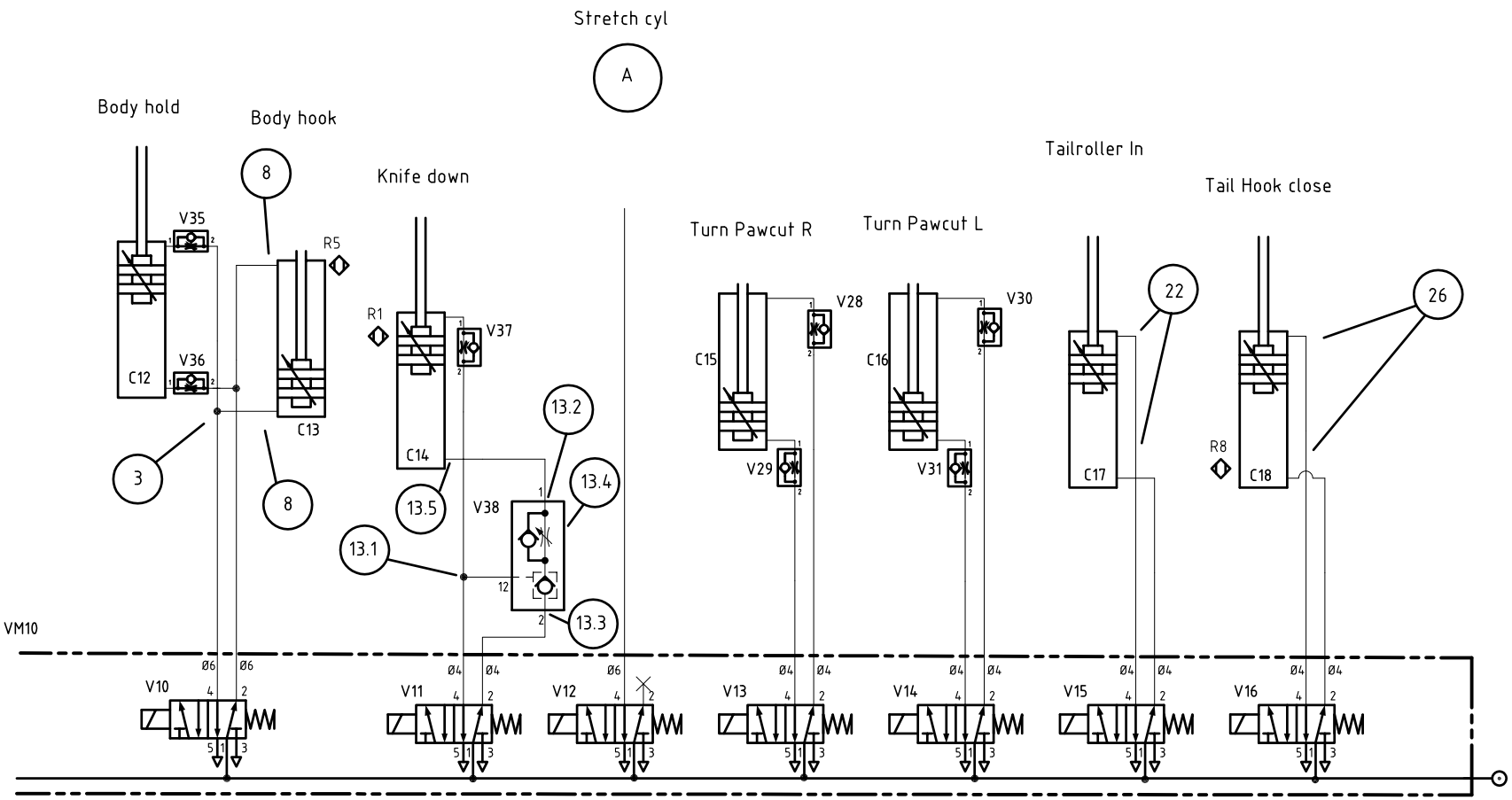

NORGREN
VESTERLUNDVEJ 18 2730 HERLEV 44914166
ANELYSTPARKEN 43C 8381 TILST. 86160111
HVIDKÆRVEJ 31 5250 ODENSE SV. 66139333

Målforh.			
	Tegn.	1-6-10	PD
	Rett.	29-6-10	PD
	Rett.	27-10-10	PD
	Rett.	26-4-2016	njo

Erst. for: A3-9395D

Tegn. nr.

ODS-0566-35714-A2

Erst. af

Combicut 2010

Parts of list ODS-0566-S2

- et selskab i IMI plc IMI

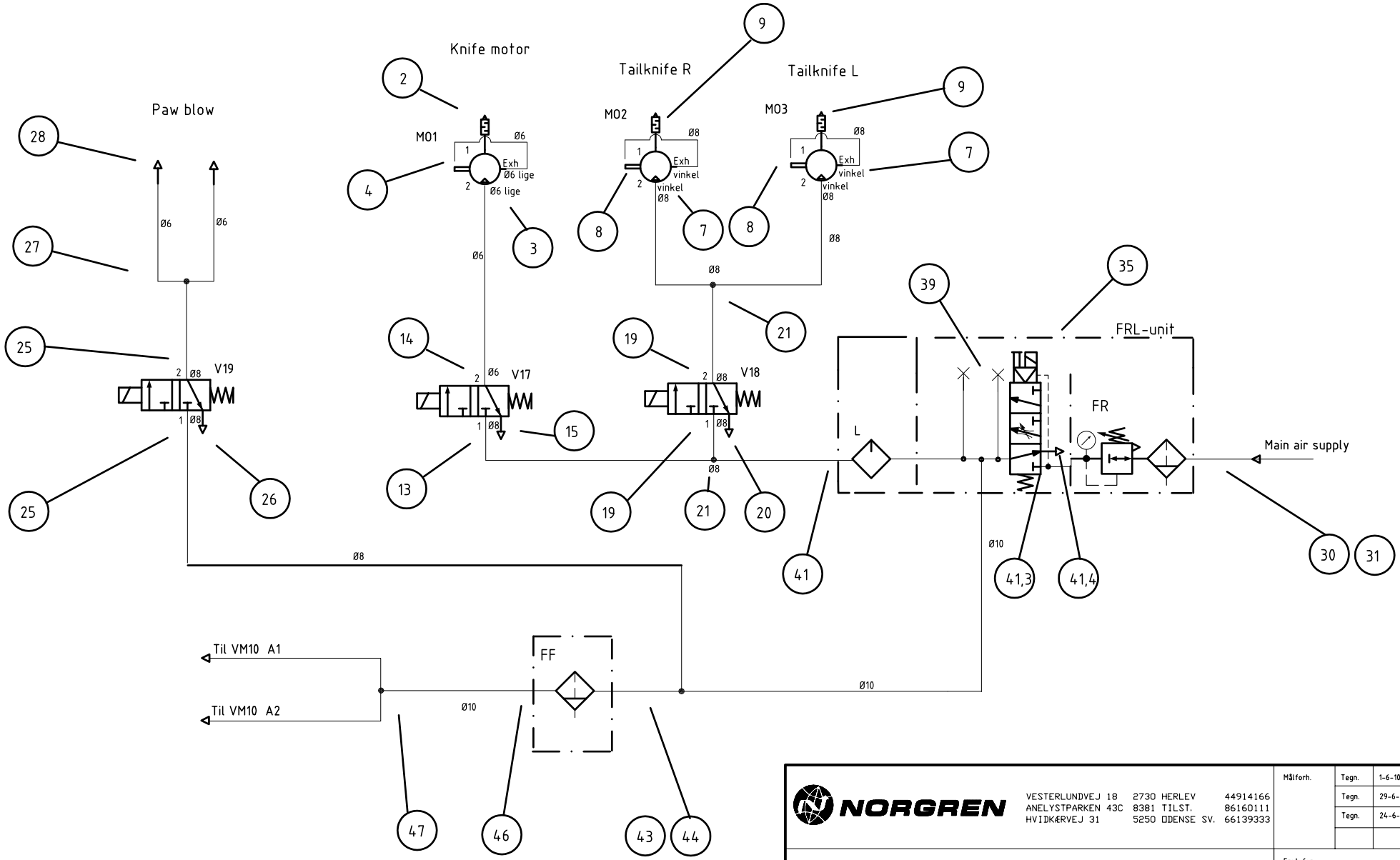

NORGREN

VESTERLUNDVEJ 18 2730 HERLEV 44914166
ANELYSTPARKEN 43C 8381 TILST. 86160111
HVIDKÆRVEJ 31 5250 ODENSE SV. 66139333

Målforh.			
	Tegn.	1-6-10	PD
	Tegn.	29-6-10	PD
	Tegn.	24-6-16	njo

Combicut 2010

Parts of list ODS-0566-S3

Erst. for:

Tegn. nr.

ODS-0566-35714-A3

Erst. af

- et selskab i IMI plc IMI

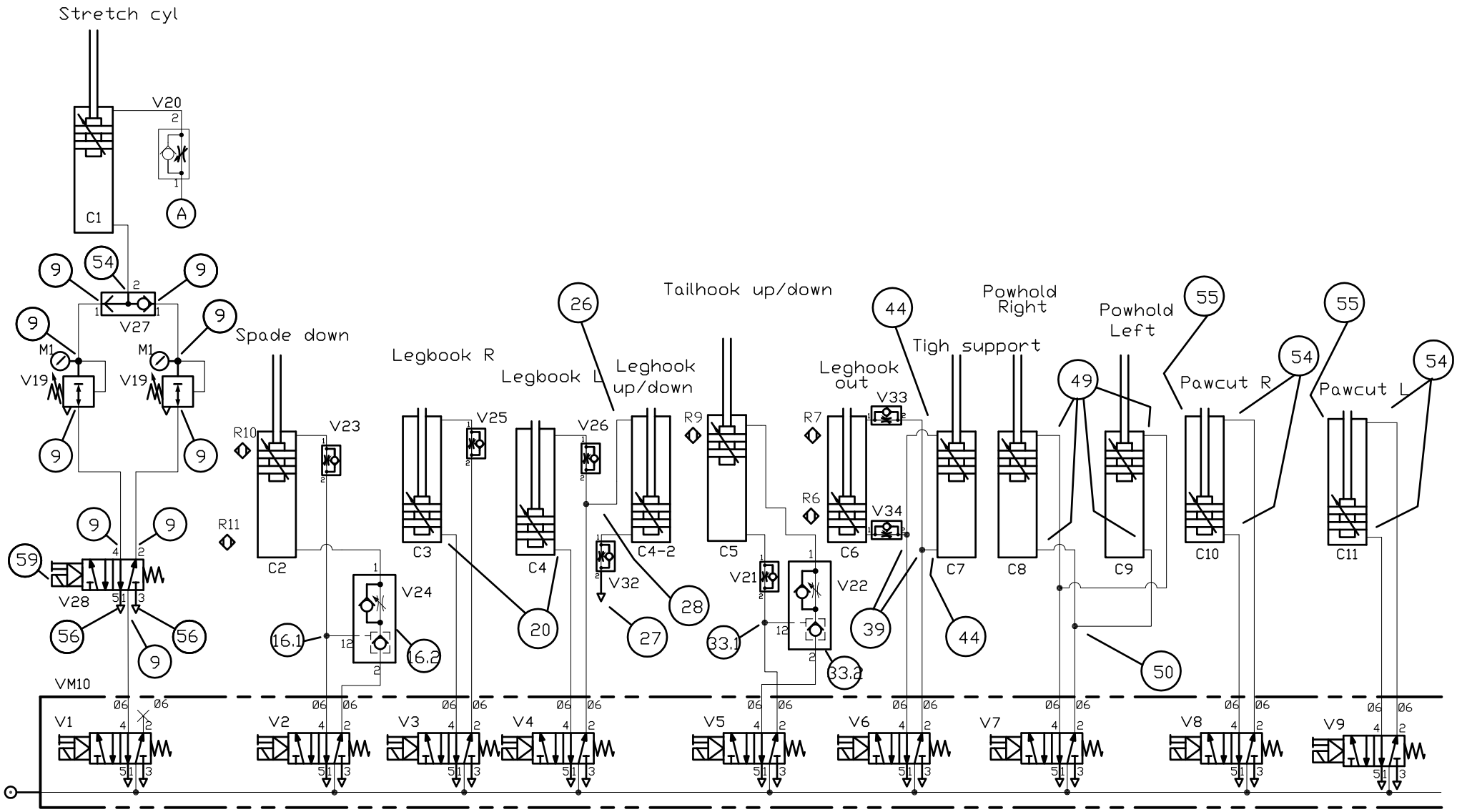

Combicut 2010

Parts list ØDS-0566-35314-S4

Material:	Scale:	First angel
Drawn by: njo	Date: 24.06.2016	
Drawing no.: ØDS-0566-35314-A4		
Supersedes:		

NORGREN
VESTERLUNDVEJ 18 2730 HERLEV +45 44914166
HVIDKÆRVEJ 31A 5250 ØDENSE SV +45 66139333

- et selskab i IMI plc IMI

		Hedensted Gruppen A/S		
Drawing no.		ODS-0566-35314-A2		Date: 26-4-2016
Parts of list		ODS-0566-S2		Design: Bjarne Stærkær
Drawing		Combicut 2010		A4-10774
Item	No.	Descreption		Norgren Ident. no.
1	1	Cyl	C12	RM/8026/M/125
2	2	Banjo flow control	V35-V36	C0K510618
3	2	Swivel Y adaptor		C00820600
4				
5	1	Cyl	C13	PRA/182040/M/80
6	1	F-Mounting		QM/57040/25
7	1	R-Mounting		QA/8040/27
8	2	Straight adaptor		C02250628
9				
10	1	Cyl	C14	RA/192020/M/25
11	1	Nut		M/P1501/60
12	1	Banjo flow control	V37	C0K510405
13	1	valve no-return,pilot oporated ø6x1/8"		C01GN0618
13,1	1	y-connector 2 x ø4 x ø4		C00820400
13,2	1	Straight connector ø4 x female 1/8"		C02260418
13,3	1	Reduction stem ø6 pipe x ø4		C00230604
13,4	1	Straight connector ø4 x M5		C02250405
13,5	1	Elbow swivel ø4 x M5		C02470405
14	2	Cyl	C15-16	RA/192032/M/80
15	2	F-Mounting		QM/8025/25
16	2	Nut		M/P1501/89
17	4	Banjo flow control	V28-V31	C0K510418
18				
19	1	Cyl	C17	RA/192025/M/25
20	1	F-Mounting		QM/8020/25
21	1	Nut		M/P1501/60
22	2	Swivel		C02470405
23				
24	1	Cyl	C18	RA/192032/M/50
25	2	Nut		M/P1501/89
26	2	Swivel		C02470418

NORGREN

		Hedensted Gruppen A/S		
Drawing no.		ODS-0566-35314-A3		Date: 26-4-2016
Parts of list		ODS-0566-S3		Design: Bjarne Stærkær
Drawing		Combicut 2010		A4-10774
Item	No.	Descreption		Norgren Ident. no.
1	1	Air Motor	M01	LZB22A049-55
2	1	Silencer		T40C1800
3	2	Straight adaptor		C02250618
4	1	Straight union		C00200600
5				
6	2	Air Motor	M02-M03	LZB22A049-55
7	4	Swivel		C02470818
8	2	Swivel		C02470828
9	2	Silencer		T40C1800
10				
11	1	Valve	V17	V60A413A-A313J
12	1	Connector		M/P43313/3
13	1	Swivel		C02470818
14	1	Swivel		C02470618
15	1	Silencer		T40C1800
16				
17	1	Valve	V18	V61B413A-A313J
18	1	Connector		M/P43313/3
19	2	Swivel		C02470828
20	1	Silencer		T40C2800
21	2	Swivel Y adaptor		C00820800
22				
23	1	Valve	V19	V60A413A-A313J
24	1	Connector		M/P43313/3
25	2	Swivel		C02470818
26	1	Silencer		T40C1800
27	1	Swivel Y adaptor		C00820806
28	2	Swivel		C02470618
29				
30	1	Plug Male		234110028
31	1	Adaptor		4215-08
32	1	Filterregulator	FR	B72G-2GK-AL3-RMN
33	1	Tamper resistant		4255-51
34	1	Gauge		18-013-989
35	1	Plug Male		160050028
36	2	Quikclamp and Wall mount		4214-52
37	2	Quikclamp		4214-51
38	1	Porting blok		4216-52
39	1	Straight adaptor		C02251028
40	1	Lubricator		L72M-2GP-ETN
41	1	Swivel		C02470828
41,1	1	Elbow male 1/4" female 1/4"		150430028
41,2	1	Quick coupling female 1/4"		40208
41,3	1	valve softstarter 1/4" 24vdc		P72F-2GC-PFA
41,4	1	Filter silence 1/4"		MB002B
42				
43	1	Swivel Tee adaptor		C02671038
44	1	Stem reducer		C00231008
45	1	Oil removal filter	FF	F73C-3GD-AT0
46	1	Swivel		C02471038
47	1	Union Tee		C00601000
48	1	wall mounting bracket		4424-50
49				
50	1	Valve	V1-V16	VM101602172
51	2	Plug Ø6		110040600
52	1	Cabel 3 m D Sub 90gr.		V12088-E03

NORGREN

		Hedensted Gruppen A/S		
Drawing no.		ODS-0566-35314-A4		Date: 26-4-2016
Parts of list		ODS-0566-S4		Design: Bjarne Stærkær
Drawing		Combicut 2010		A4-10774
Item	No.	Descreption		Norgren Ident. no.
1	1	Cyl	C1	PRA/182032/M/320
2	1	F-Mounting		QM/8025/25
3	1	L-Mounting		QA/8032/24
4	1	Swivel		C02470618
5	1	Banjo flow control	V20	C0L510618
6	2	Valve	V19	R07-100-RNKG
7	2	Bracket		M/P71273/3
8	2	Gauge	M1	18-013-011
9	9	Swivel		C02470618
10	2	Mounting nut		2962-04
11				
12	1	Cyl	C2	PRA/182040/M/500
13	1	F-Mounting		QM/8040/25
14	1	L-Mounting		QA/8040/24
15	1	Banjo flow control	V23	C0K510628
16	1	valve no-return,pilotoperated ø6 x 1/4"	V24	C01GN0628
16,1	1	tee ø6 x ø6 x ø6		C00600600
16,2	1	Elbow swirvel ø6 x 1/8"		C01470618
17	2	Cyl	C3-C4	RT/57225/M/50
18	2	F Mounting		HG NO 207856
19	2	Nut		M/P1501/89
20	2	Straight adaptor		C01250618
21	2	Banjo flow control	V25	C0TA00618
22				
23	1	Cyl	C4-2	RM/8026/M/80
24	1	F Mounting		QM/8025/25
25	1	Banjo flow control	V32	C0K510618
26	1	Swivel		C02470618
27	1	Silencer		100110600
28	1	Swivwl y adaptor		C00820600
29				
30	1	Cyl	C5	RA/192032/M/80
31	1	Nut		M/P1501/89
32	1	Banjo flow control	V22	C0K510618
33	1	valve no-return,pilotoperated ø6 x 1/4"	V21	C01GN0618
33,1	1	Elbow swirvel ø6 x M5		C02470605
33,2	1	Y-connector 2 x ø6x ø6		C00820600
34	1	Cyl	C6	RT/57225/M/50
35	1	Nut		M/P1501/89
36	1	UF-Mounting		QM/8025/32
37	1	L-Mounting		QM/57025/24
38	2	Banjo flow control	V33-V34	C0TA00618
39	2	Swivel Y adaptor		C00820600
40				
41	1	Cyl	C7	RA/192032/M/20
42	1	F Mounting		QM/8025/25
43	1	Nut		M/P1501/89
44	2	Swivel		C02470618
45				
46	2	Cyl	C8-C9	RA/192032/M/25
47	2	F Mounting		QM/8025/25
48	2	Nut		M/P1501/89
49	4	Swivel		C02470618
50	2	Swivel Y adaptor		C00820600
51				
52	2	Cyl	C10-C11	RA/192032/M/20
53	4	Nut		M/P1501/89
54	5	Straight adaptor		C02250618
55	16	Mounting brace		M/P72816
56	2	1/8 silencer		T40C1800
57	1	1/8" switch valve	v27	T65C1800
58	1	1/8" solenoid 5/2 valve	v28	V60A513A-A313J
59	1	socket 22mm		M/P43313/3

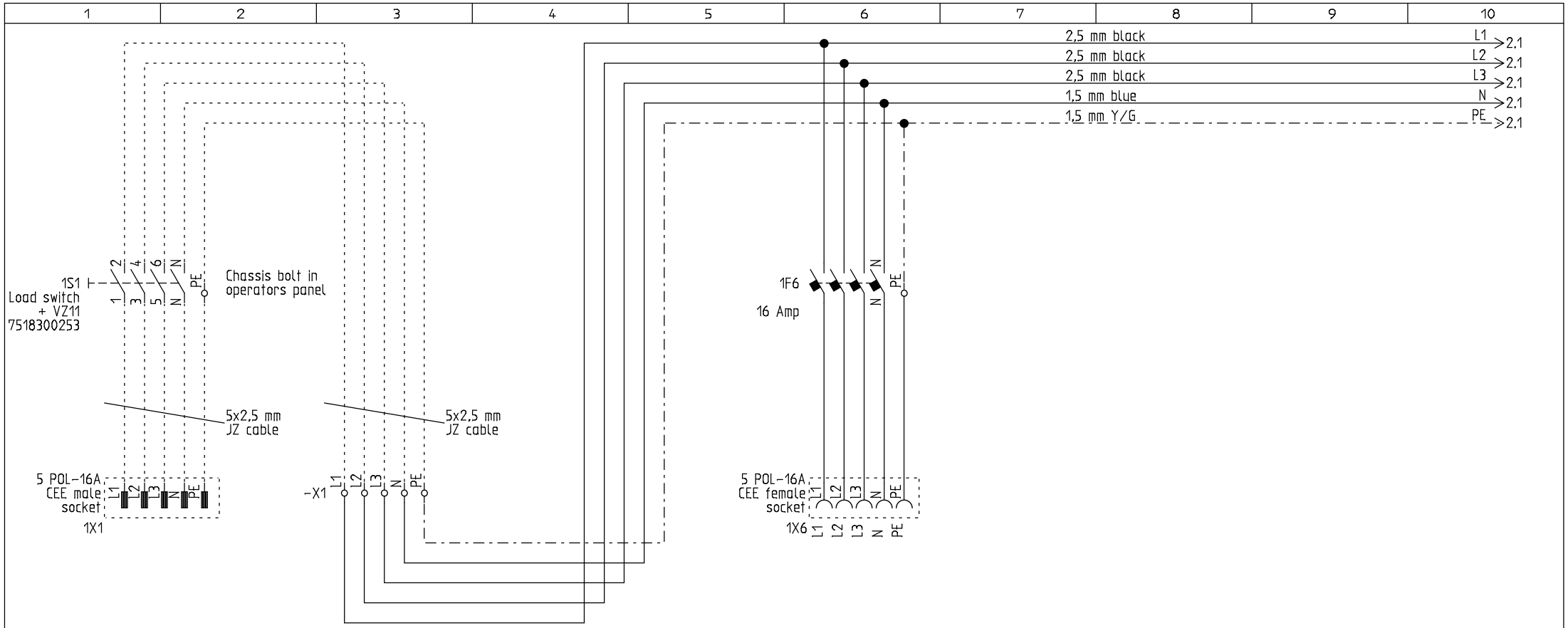

HEDENSTED GRUPPEN
Vejlevej 15, DK-8722 HEDENSTED
(+45) 75891244 - Fax: (+45) 75891180

Power supply

Projektnavn: Combi_Cut_2015_02_FX3G			Tegnet: KL
			Rettet: 27-05-2016
Næste Side: 2	Printdato:	Side nr.: 1	Side af: 26
Opr: 05-12-2014	02-06-2010		

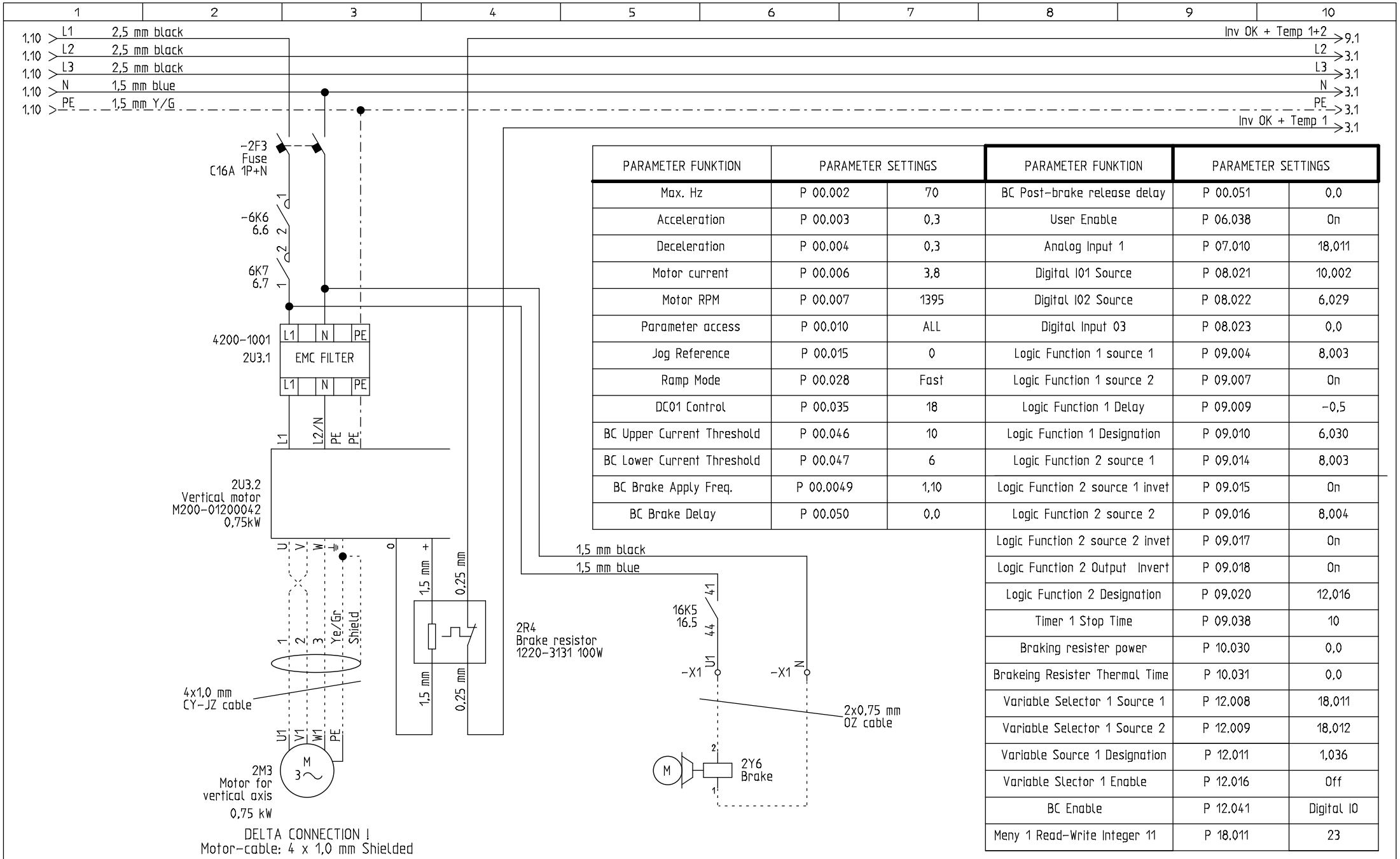

PARAMETER FUNKTION	PARAMETER SETTINGS		PARAMETER FUNKTION	PARAMETER SETTINGS	
Max. Hz	P 00.002	70	BC Post-brake release delay	P 00.051	0,0
Acceleration	P 00.003	0,3	User Enable	P 06.038	On
Deceleration	P 00.004	0,3	Analog Input 1	P 07.010	18,011
Motor current	P 00.006	3,8	Digital I01 Source	P 08.021	10,002
Motor RPM	P 00.007	1395	Digital I02 Source	P 08.022	6,029
Parameter access	P 00.010	ALL	Digital Input 03	P 08.023	0,0
Jog Reference	P 00.015	0	Logic Function 1 source 1	P 09.004	8,003
Ramp Mode	P 00.028	Fast	Logic Function 1 source 2	P 09.007	On
DC01 Control	P 00.035	18	Logic Function 1 Delay	P 09.009	-0,5
BC Upper Current Threshold	P 00.046	10	Logic Function 1 Designation	P 09.010	6,030
BC Lower Current Threshold	P 00.047	6	Logic Function 2 source 1	P 09.014	8,003
BC Brake Apply Freq.	P 00.0049	1,10	Logic Function 2 source 1 invet	P 09.015	On
BC Brake Delay	P 00.050	0,0	Logic Function 2 source 2	P 09.016	8,004
			Logic Function 2 source 2 invet	P 09.017	On
			Logic Function 2 Output Invert	P 09.018	On
			Logic Function 2 Designation	P 09.020	12,016
			Timer 1 Stop Time	P 09.038	10
			Braking resister power	P 10.030	0,0
			Brakeing Resister Thermal Time	P 10.031	0,0
			Variable Selector 1 Source 1	P 12.008	18,011
			Variable Selector 1 Source 2	P 12.009	18,012
			Variable Source 1 Designation	P 12.011	1,036
			Variable Slector 1 Enable	P 12.016	Off
			BC Enable	P 12.041	Digital I0
			Meny 1 Read-Write Integer 11	P 18.011	23

HEDENSTED GRUPPEN
Vejlevej 15, DK-8722 HEDENSTED
(+45) 75891244 - Fax: (+45) 75891180

Mains vertical

Projektnavn: Combi_Cut_2015_02_FX3G

Tegnet: KL
Rettet: 27-05-2016

Næste Side: 3
Opr: 05-12-2014
Printdato: 01-03-2011
Side nr.: 2
Side af: 26

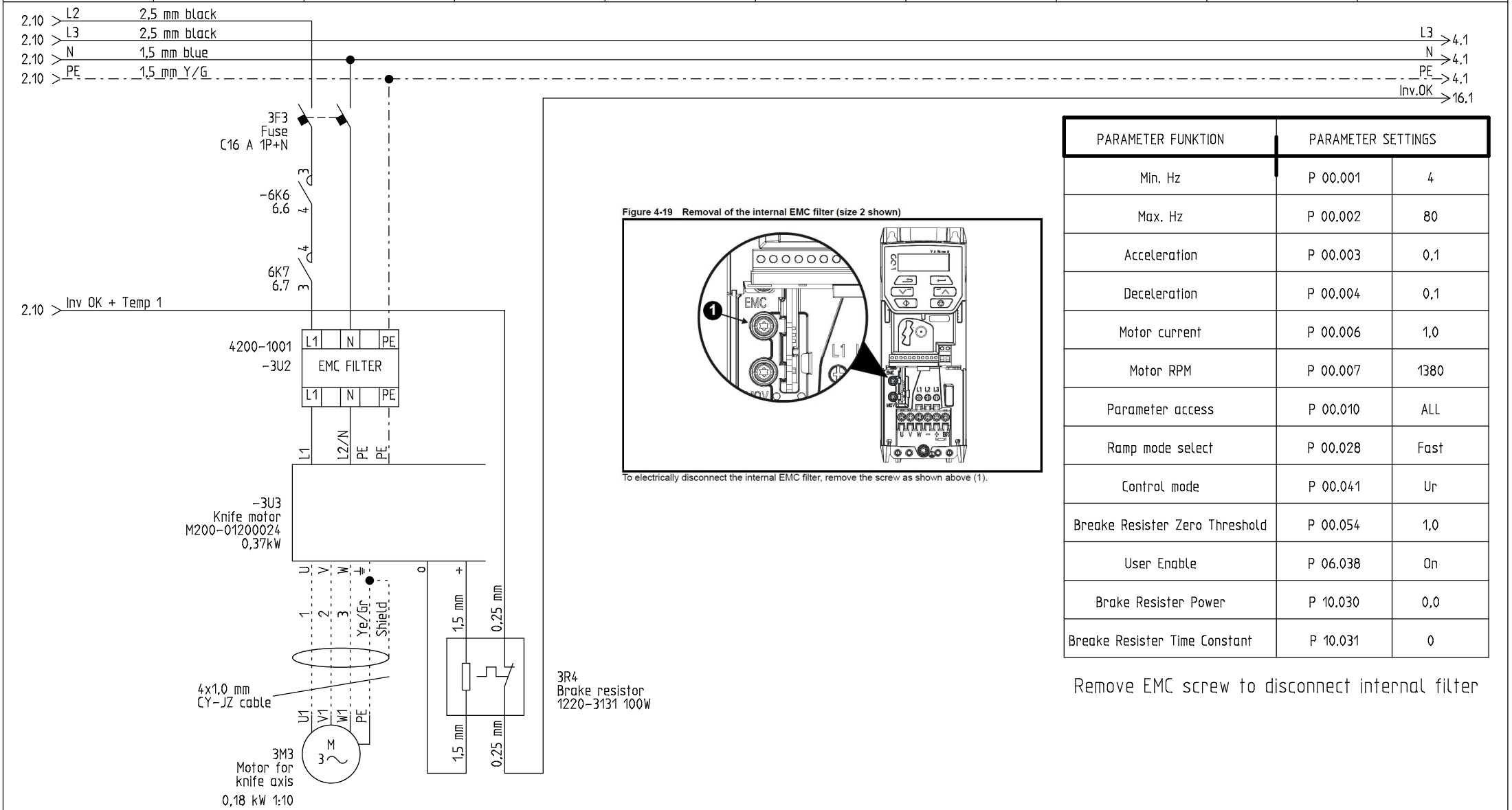

Figure 4-19 Removal of the internal EMC filter (size 2 shown)

To electrically disconnect the internal EMC filter, remove the screw as shown above (1).

PARAMETER FUNKTION	PARAMETER SETTINGS	
Min. Hz	P 00.001	4
Max. Hz	P 00.002	80
Acceleration	P 00.003	0,1
Deceleration	P 00.004	0,1
Motor current	P 00.006	1,0
Motor RPM	P 00.007	1380
Parameter access	P 00.010	ALL
Ramp mode select	P 00.028	Fast
Control mode	P 00.041	Ur
Breake Resister Zero Threshold	P 00.054	1,0
User Enable	P 06.038	On
Brake Resister Power	P 10.030	0,0
Breake Resister Time Constant	P 10.031	0

Remove EMC screw to disconnect internal filter

HEDENSTED GRUPPEN
Vejlevej 15, DK-8722 HEDENSTED
(+45) 75891244 - Fax: (+45) 75891180

Mains knife

Projektnavn: Combi_Cut_2015_02_FX3G

Tegnet: KL
Rettet: 27-05-2016

Næste Side: 4
Opr: 05-12-2014
Printdato: 01-03-2011
Side nr.: 3
Side af: 26

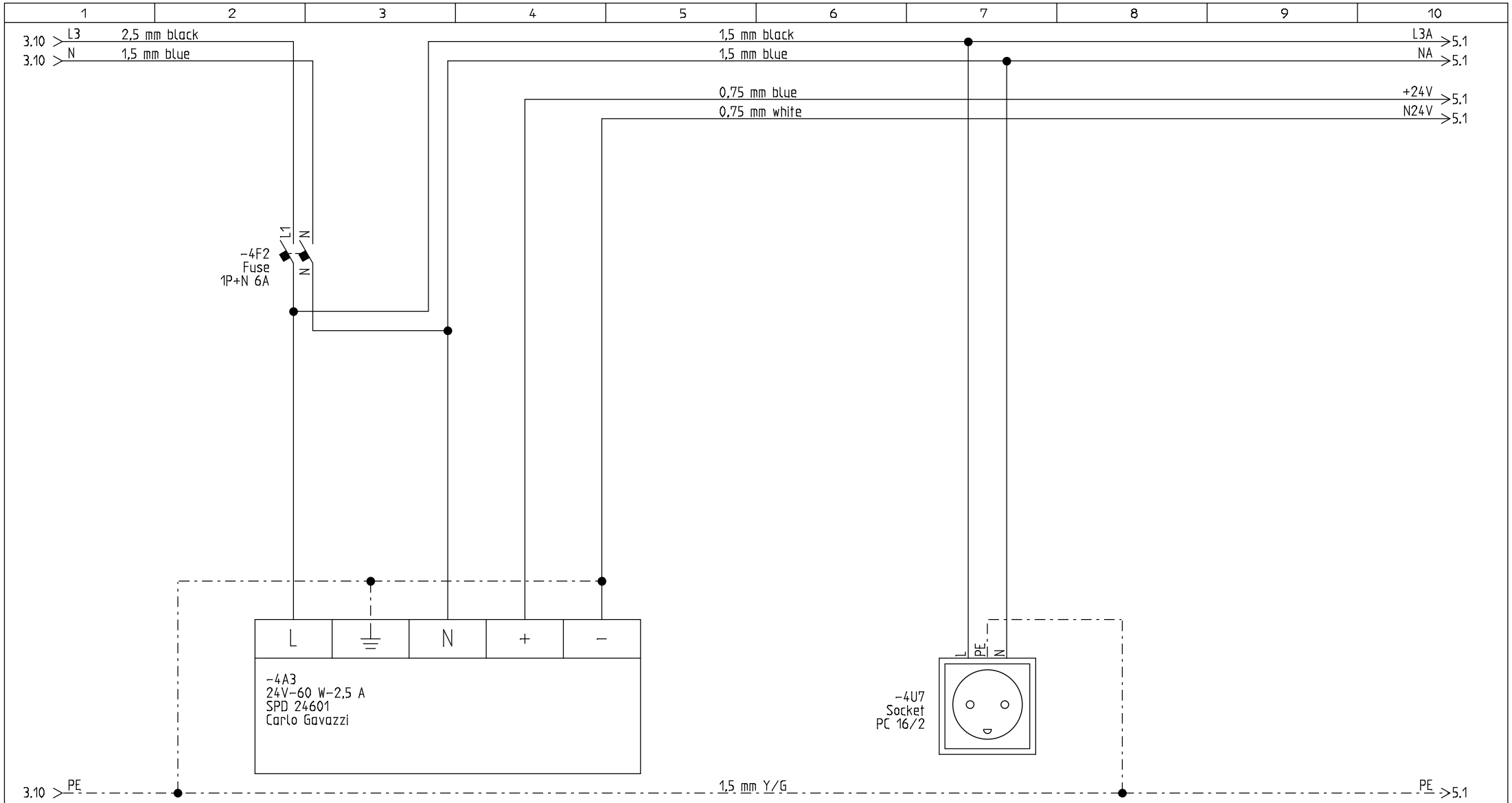

HEDENSTED GRUPPEN
Vejlevej 15, DK-8722 HEDENSTED
(+45) 75891244 - Fax: (+45) 75891180

24 VDC power

Projektnavn:
Combi_Cut_2015_02_FX3G

Tegnet: KL
Rettet: 25-04-2016

Næste Side: 5
Opr: 05-12-2014
Printdato: 02-06-2010
Side nr.: 4
Side af: 26

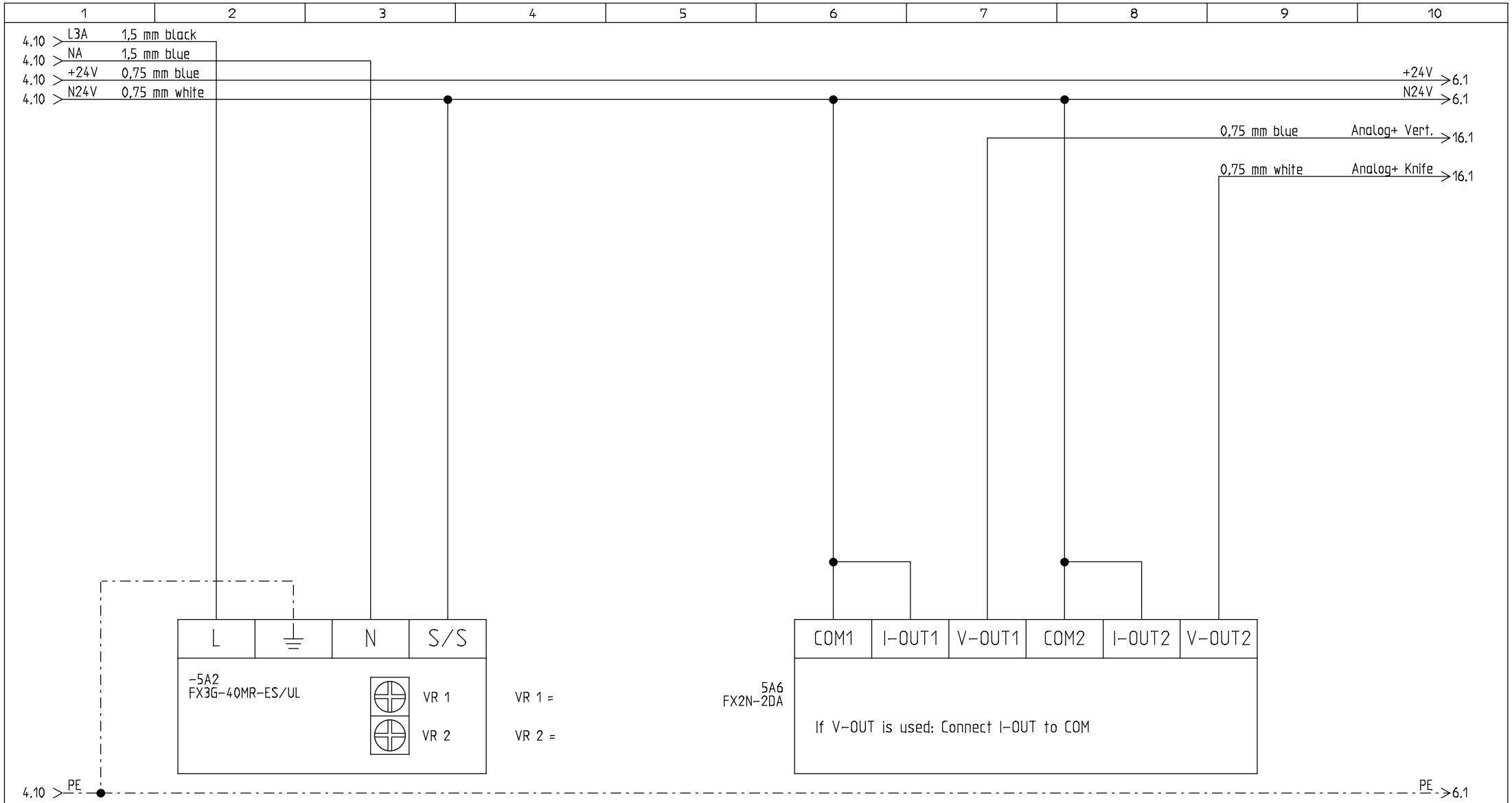

HEDENSTED GRUPPEN
Vejlevej 15, DK-8722 HEDENSTED
(+45) 75891244 - Fax: (+45) 75891180

PLC supply

Projektnavn: Combi_Cut_2015_02_FX3G

Tegnet: KL

Rettet: 27-05-2016

Næste Side: 6

Opr: 05-12-2014

Printdato: 02-06-2010

Side nr.: 5

Side af: 26

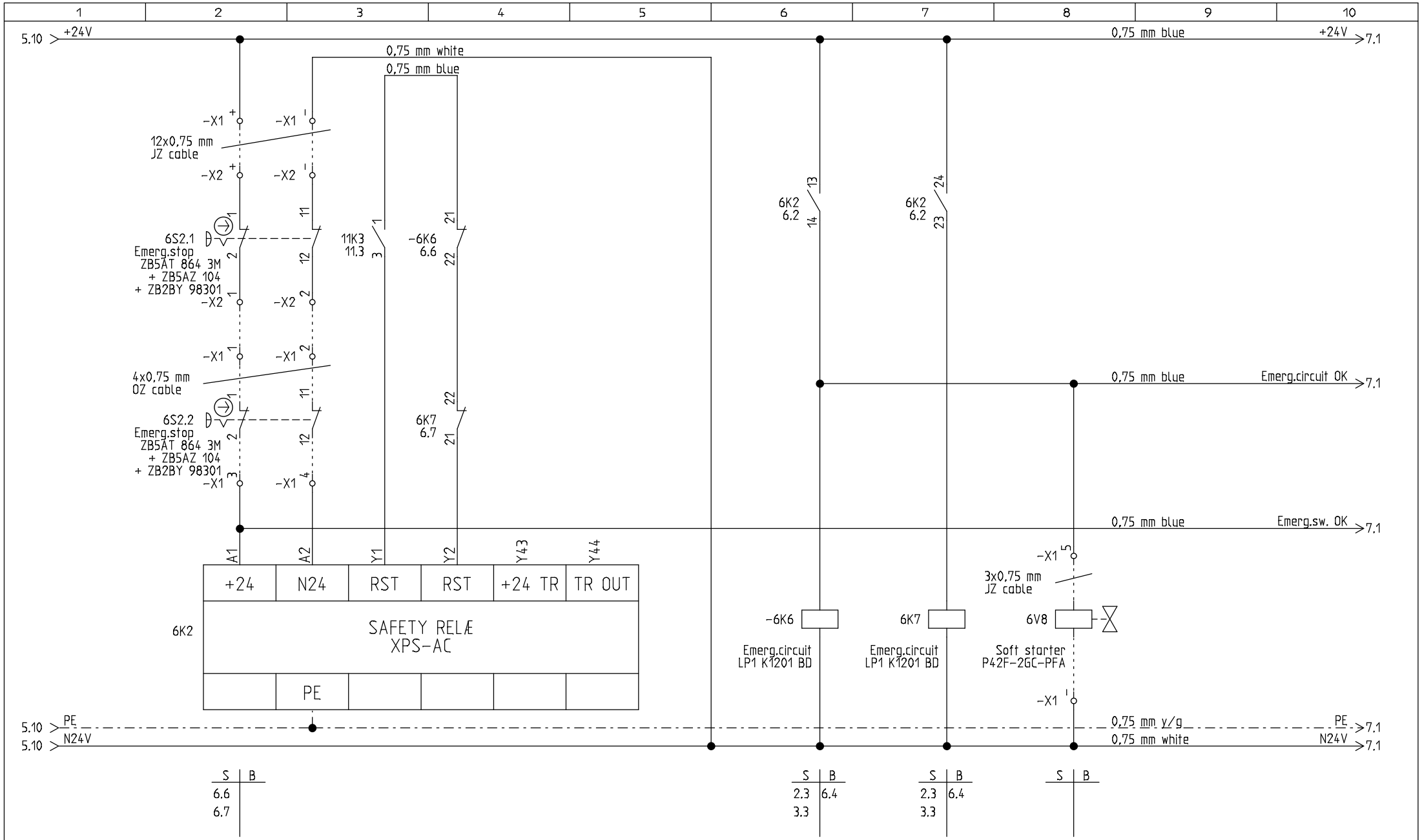

HEDENSTED GRUPPEN
Vejlevej 15, DK-8722 HEDENSTED
(+45) 75891244 - Fax: (+45) 75891180

Emergency circuit

Projektnavn:
Combi_Cut_2015_02_FX3G

Tegnet: KL
Rettet: 27-05-2016

Næste Side: 7
Opr: 05-12-2014
Printdato: 02-06-2010
Side nr.: 6
Side af: 26

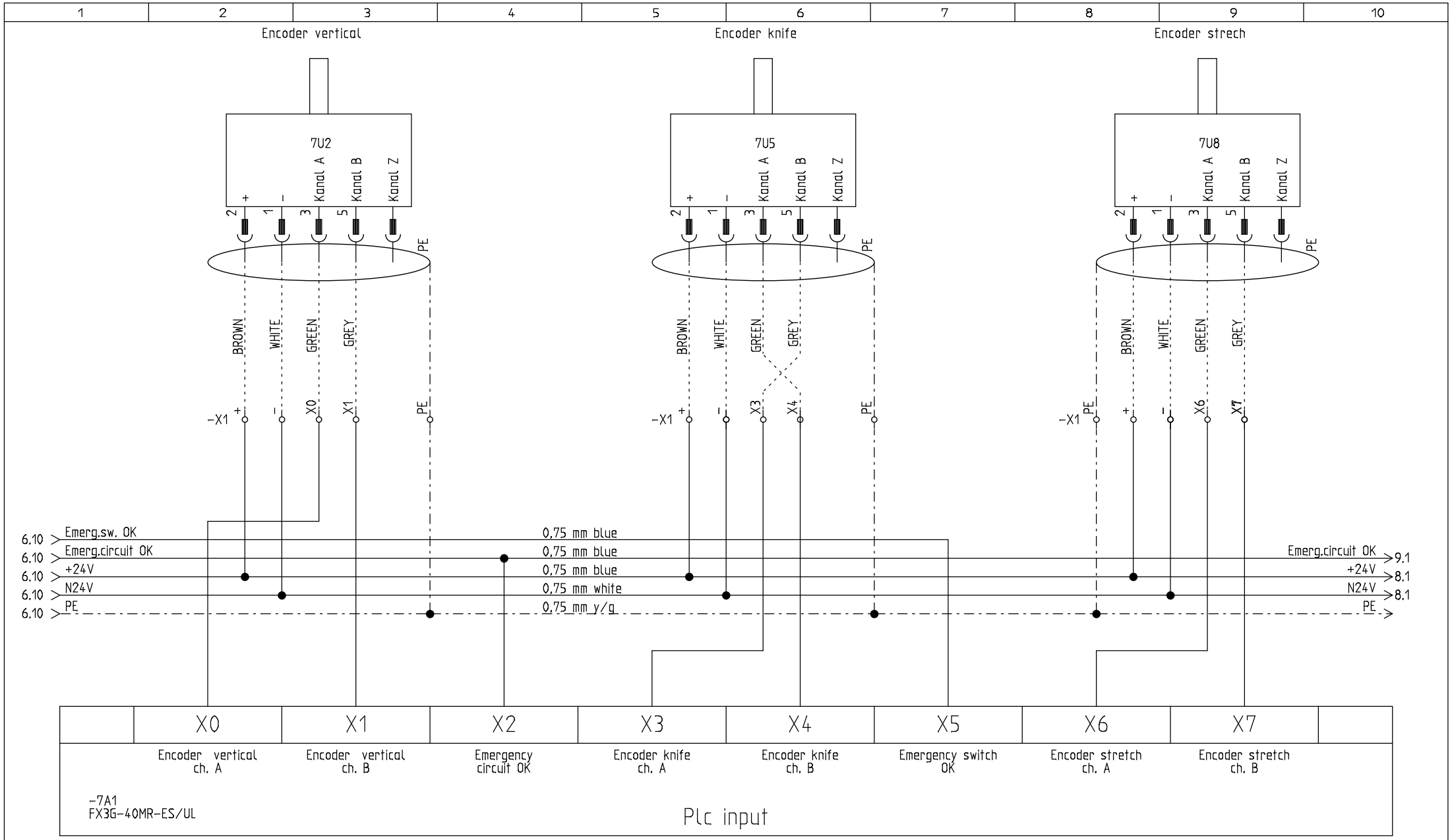

HEDENSTED GRUPPEN
Vejlevej 15, DK-8722 HEDENSTED
(+45) 75891244 - Fax: (+45) 75891180

PLC Inputs X0-X7

Projektnavn: Combi_Cut_2015_02_FX3G

Tegnet: KL

Rettet: 27-05-2016

Næste Side: 8

Opr: 05-12-2014

Printdato: 02-06-2010

Side nr.: 7

Side af: 26

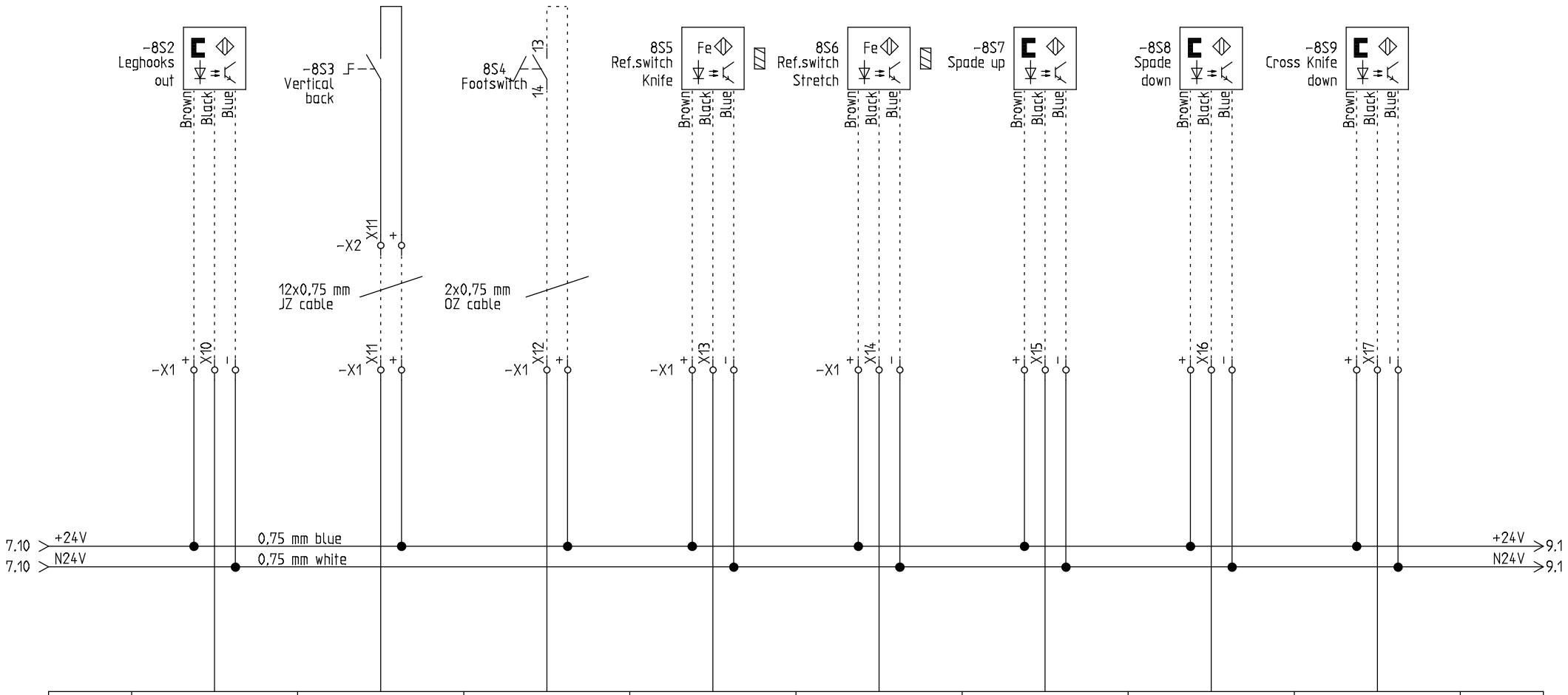

	X10	X11	X12	X13	X14	X15	X16	X17	
	Leghooks out	Vertical reverse pushbutton	Footswitch	Reference Knife	Reference Stretch	Spade up	Spade down	Cross Knife down	

-8A1
FX3G-40MR-ES/UL

Plc input

HEDENSTED GRUPPEN
Vejlevej 15, DK-8722 HEDENSTED
(+45) 75891244 - Fax: (+45) 75891180

PLC Inputs X10-X17

Projektnavn: Combi_Cut_2015_02_FX3G

Tegnet: KL
Rettet: 27-05-2016

Næste Side: 9
Opr: 05-12-2014
Printdato: 02-06-2010
Side nr.: 8
Side af: 26

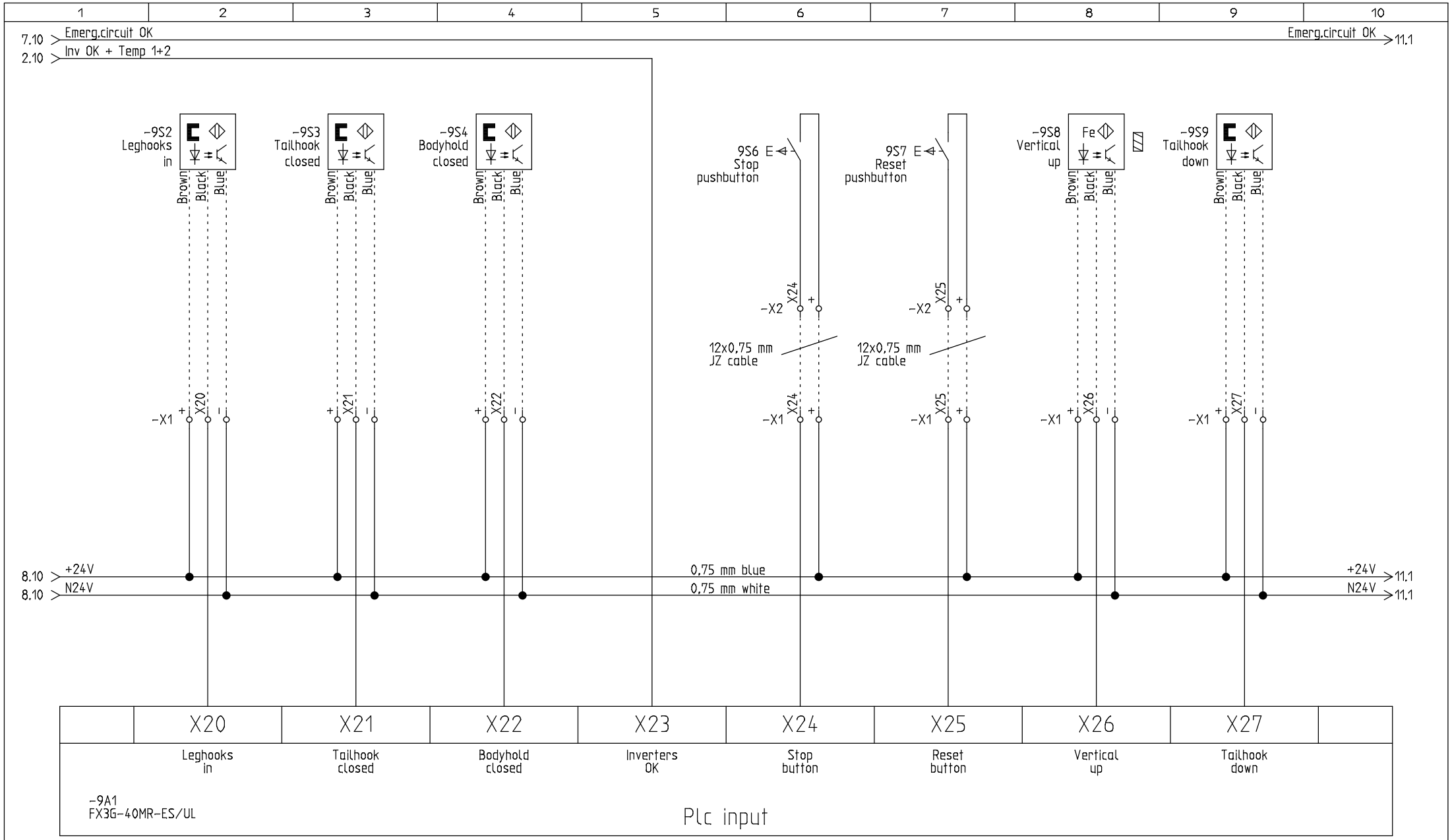

HEDENSTED GRUPPEN
Vejlevej 15, DK-8722 HEDENSTED
(+45) 75891244 - Fax: (+45) 75891180

PLC Inputs X20-X27

Projektnavn:
Combi_Cut_2015_02_FX3G

Tegnet: KL
Rettet: 27-05-2016

Næste Side: 10
Opr: 05-12-2014
Printdato: 02-06-2010
Side nr.: 9
Side af: 26

1	2	3	4	5	6	7	8	9	10

HEDENSTED GRUPPEN
Vejlevej 15, DK-8722 HEDENSTED
(+45) 75891244 - Fax: (+45) 75891180

Empty page

Projektnavn:
Combi_Cut_2015_02_FX3G

Tegnet: KL
Rettet: 25-04-2016

Næste Side: 11
Opr: 05-12-2014

Printdato: 02-06-2010

Side nr.: 10

Side af: 26

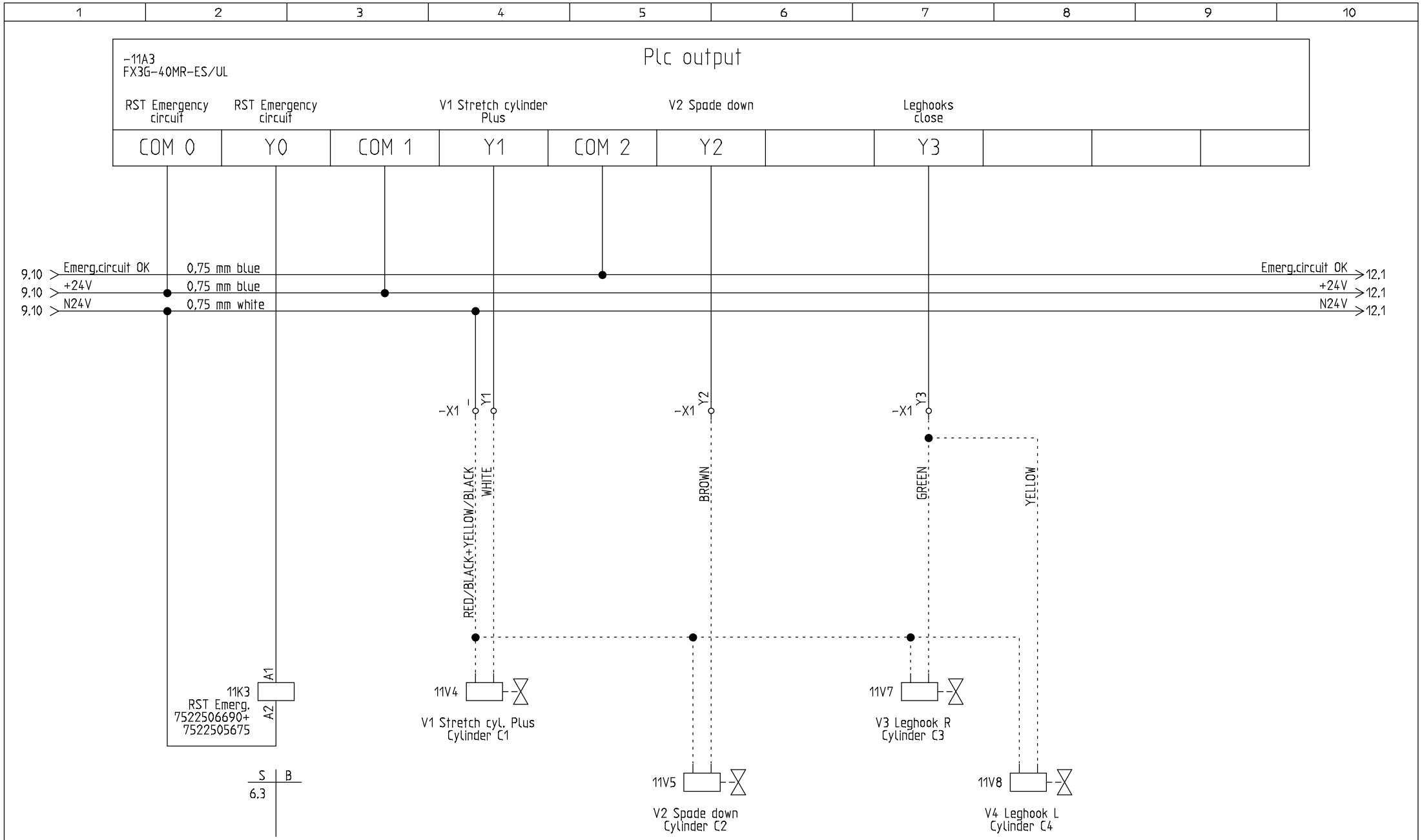

HEDENSTED GRUPPEN
Vejlevej 15, DK-8722 HEDENSTED
(+45) 75891244 - Fax: (+45) 75891180

PLC outputs Y0-Y3

Projektnavn: Combi_Cut_2015_02_FX3G

Tegnet: KL

Rettet: 27-05-2016

Næste Side: 12

Opr: 05-12-2014

Printdato: 27-01-2011

Side nr.: 11

Side af: 26

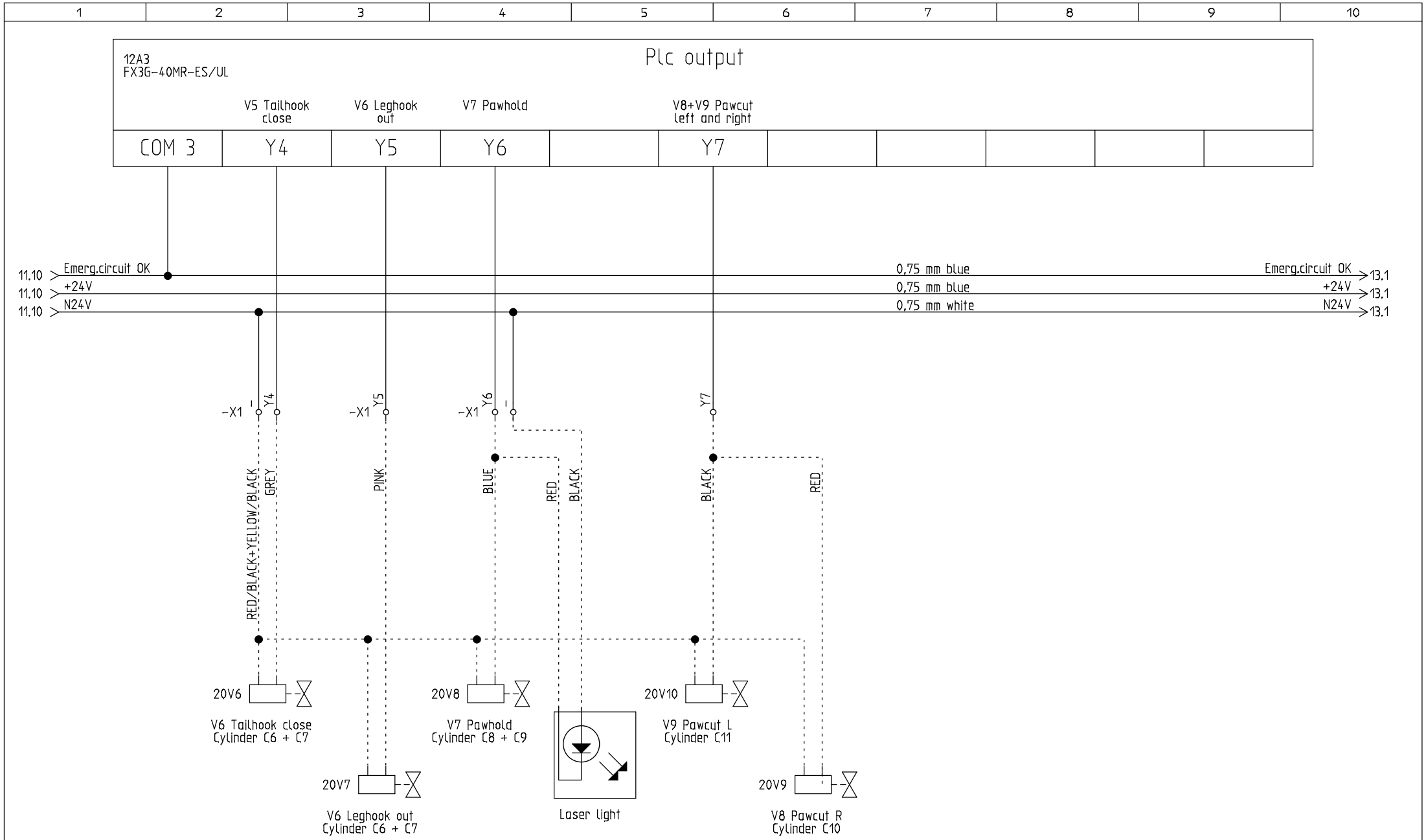

HEDENSTED GRUPPEN
Vejlevej 15, DK-8722 HEDENSTED
(+45) 75891244 - Fax: (+45) 75891180

PLC outputs Y4-Y7

Projektnavn: Combi_Cut_2015_02_FX3G

Tegnet: KL

Rettet: 27-05-2016

Næste Side: 13

Opr: 05-12-2014

Printdato: 27-01-2011

Side nr.: 12

Side af: 26

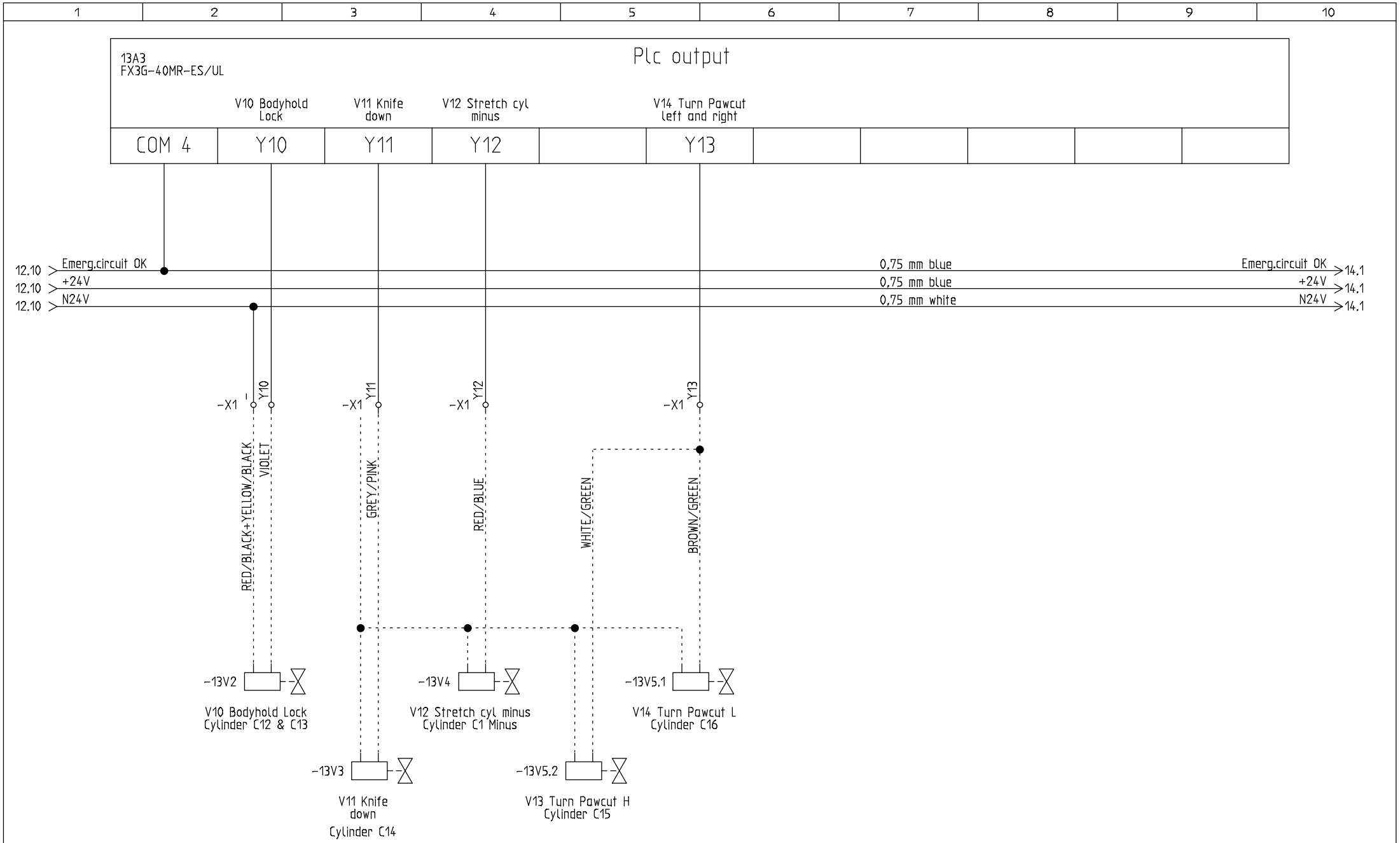

HEDENSTED GRUPPEN
Vejlevej 15, DK-8722 HEDENSTED
(+45) 75891244 - Fax: (+45) 75891180

PLC outputs Y10-Y13

Projektnavn: Combi_Cut_2015_02_FX3G

Tegnet: KL
Rettet: 27-05-2016

Næste Side: 14
Opr: 05-12-2014
Printdato: 27-01-2011
Side nr.: 13
Side af: 26

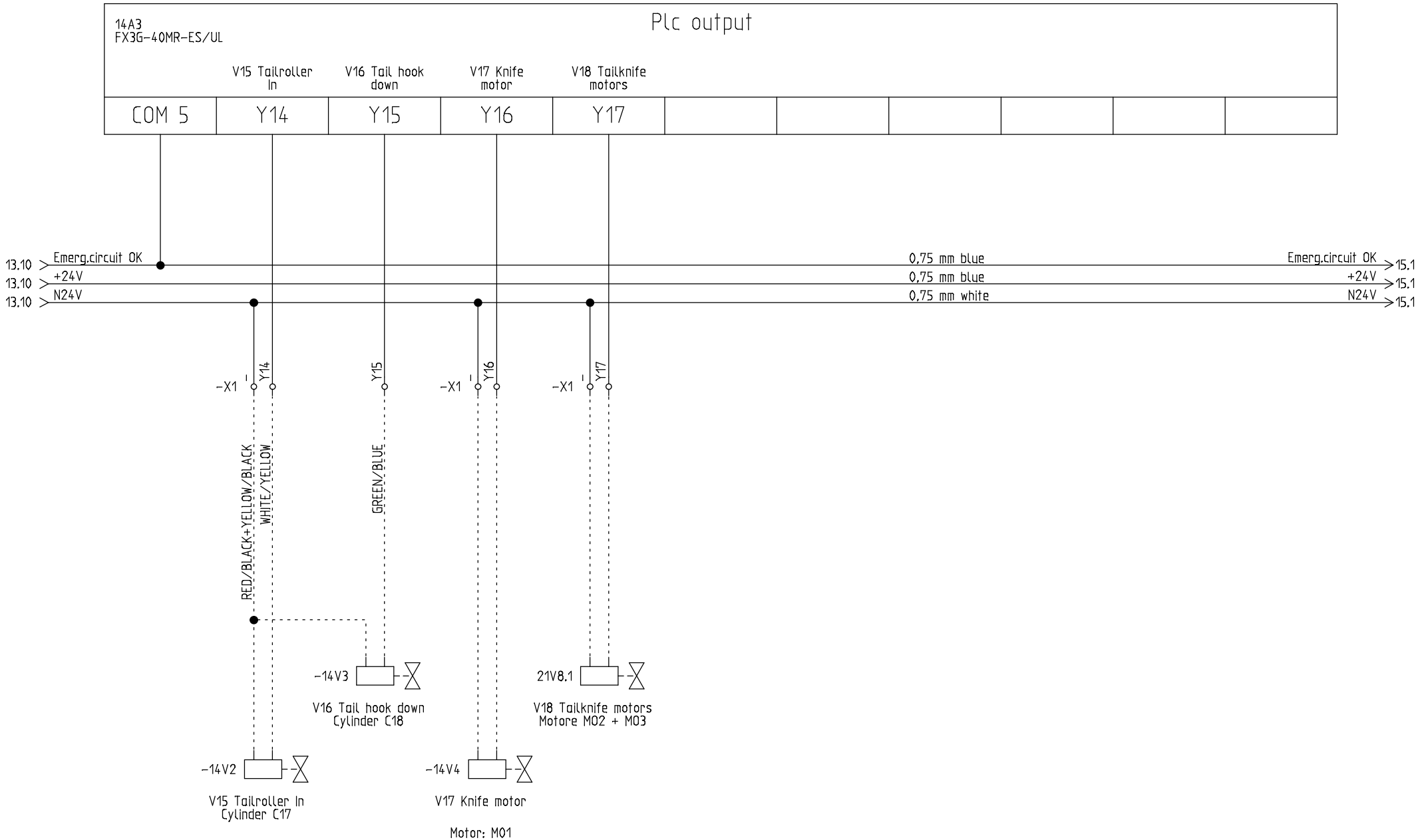

HEDENSTED GRUPPEN
Vejlevej 15, DK-8722 HEDENSTED
(+45) 75891244 - Fax: (+45) 75891180

PLC outputs Y14-Y17

Projektnavn: Combi_Cut_2015_02_FX3G

Tegnet: KL

Rettet: 27-05-2016

Næste Side: 15

Opr: 05-12-2014

Printdato: 27-01-2011

Side nr.: 14

Side af: 26

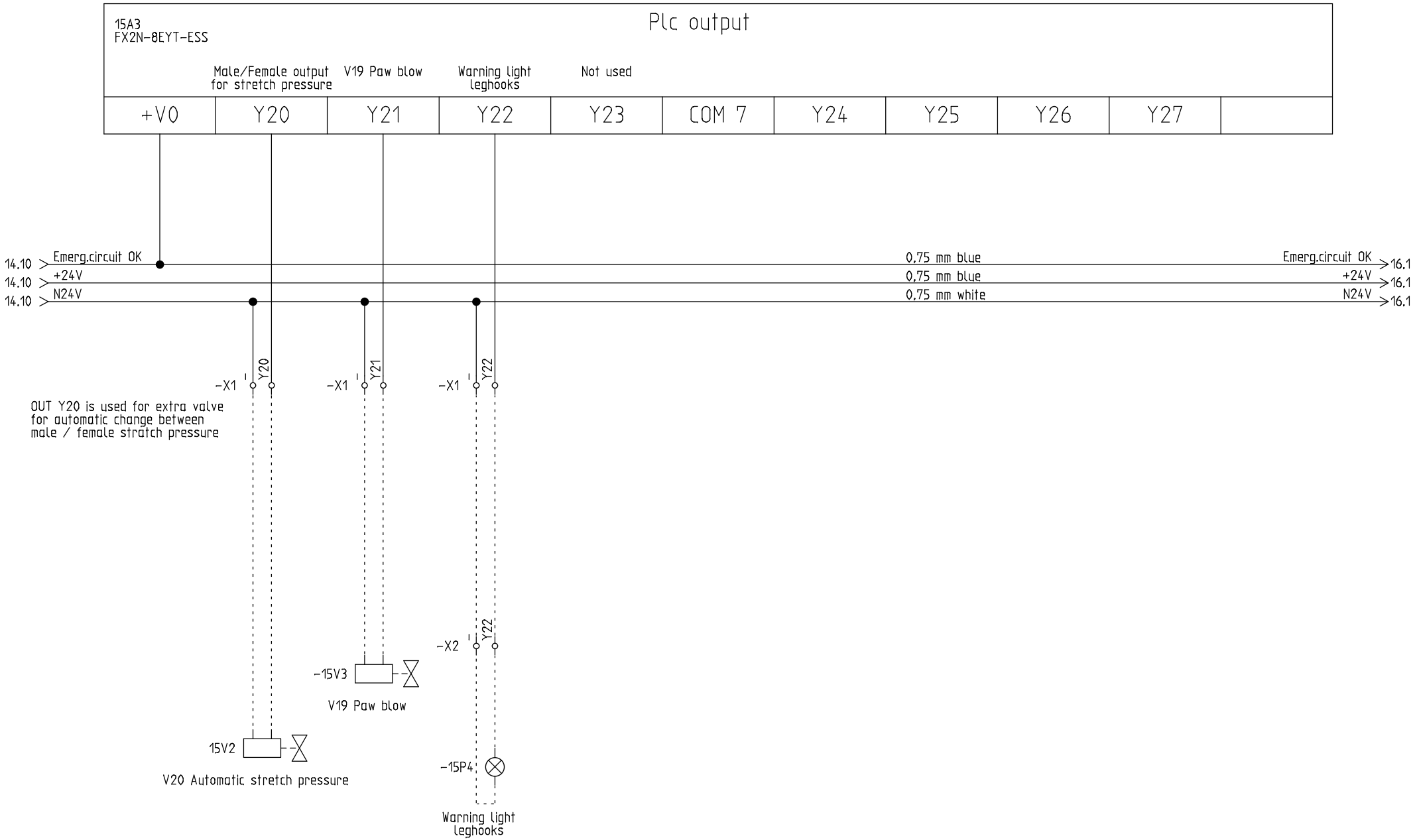

HEDENSTED GRUPPEN
Vejlevej 15, DK-8722 HEDENSTED
(+45) 75891244 - Fax: (+45) 75891180

PLC outputs Y20-Y23

Projektnavn: Combi_Cut_2015_02_FX3G

Tegnet: KL

Rettet: 27-05-2016

Næste Side: 16

Opr: 05-12-2014

Printdato: 27-01-2011

Side nr.: 15

Side af: 26

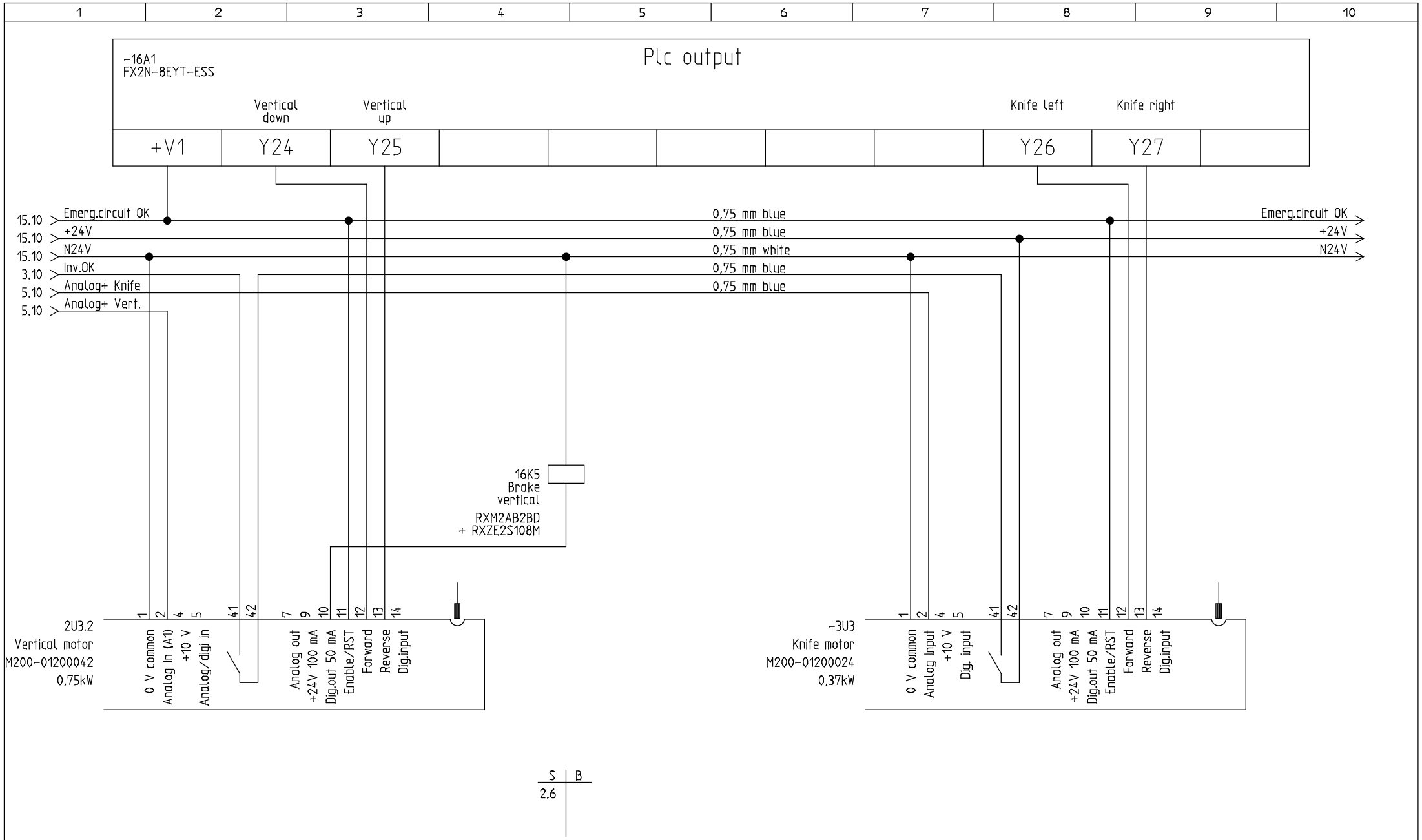

HEDENSTED GRUPPEN
Vejlevej 15, DK-8722 HEDENSTED
(+45) 75891244 - Fax: (+45) 75891180

PLC outputs Y24-Y27

Projektnavn: Combi_Cut_2015_02_FX3G

Tegnet: KL

Rettet: 27-05-2016

Næste Side: 17

Opr: 05-12-2014

Printdato: 02-06-2010

Side nr.: 16

Side af: 26

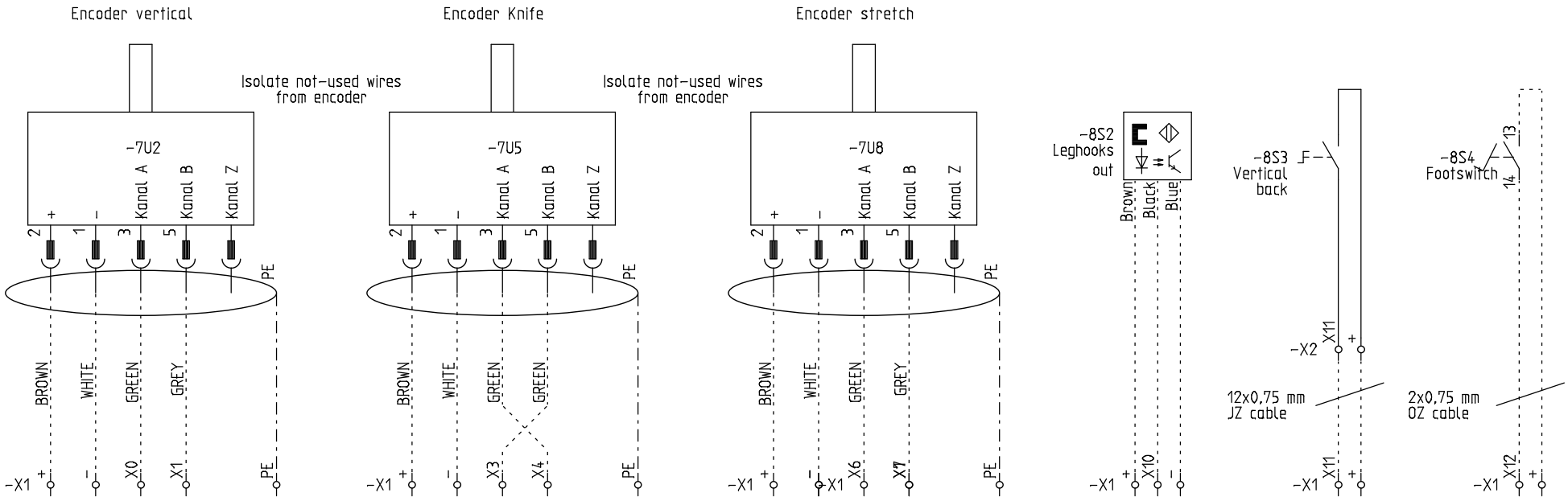

HEDENSTED GRUPPEN
Vejlevej 15, DK-8722 HEDENSTED
(+45) 75891244 - Fax: (+45) 75891180

Ext. connections 1/6

Projektnavn:
Combi_Cut_2015_02_FX3G

Tegnet: KL
Rettet: 27-05-2016

Næste Side: 18
Opr: 05-12-2014
Printdato: 02-06-2010
Side nr.: 17
Side af: 26

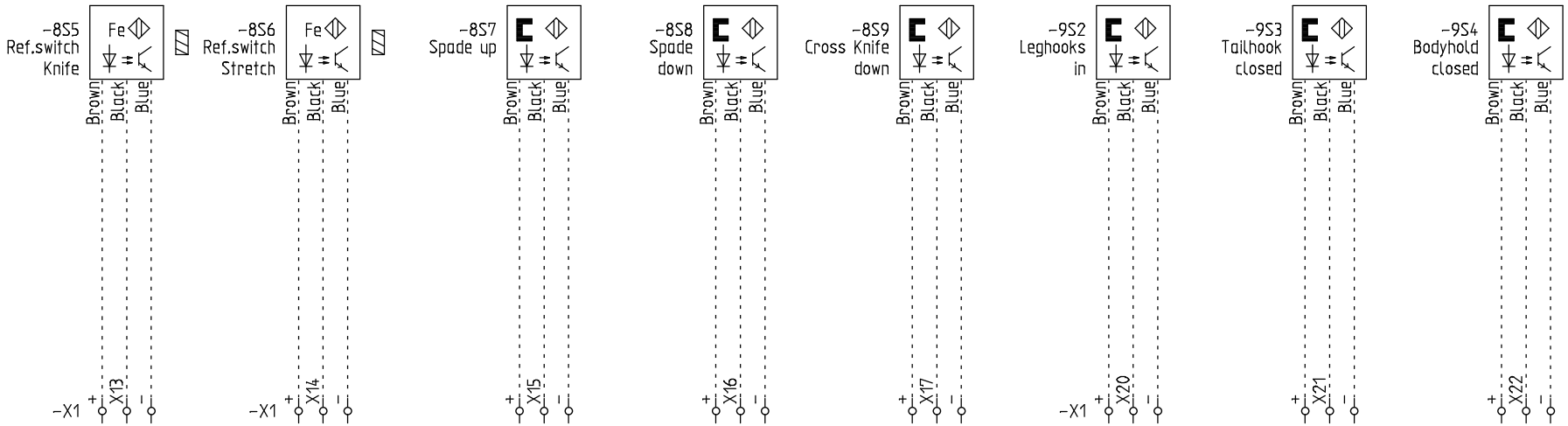

HEDENSTED GRUPPEN
Vejlevej 15, DK-8722 HEDENSTED
(+45) 75891244 - Fax: (+45) 75891180

Ext. connections 2/6

Projektnavn:
Combi_Cut_2015_02_FX3G

Tegnet: KL
Rettet: 27-05-2016

Næste Side: 19
Opr: 05-12-2014
Printdato: 02-06-2010
Side nr.: 18
Side af: 26

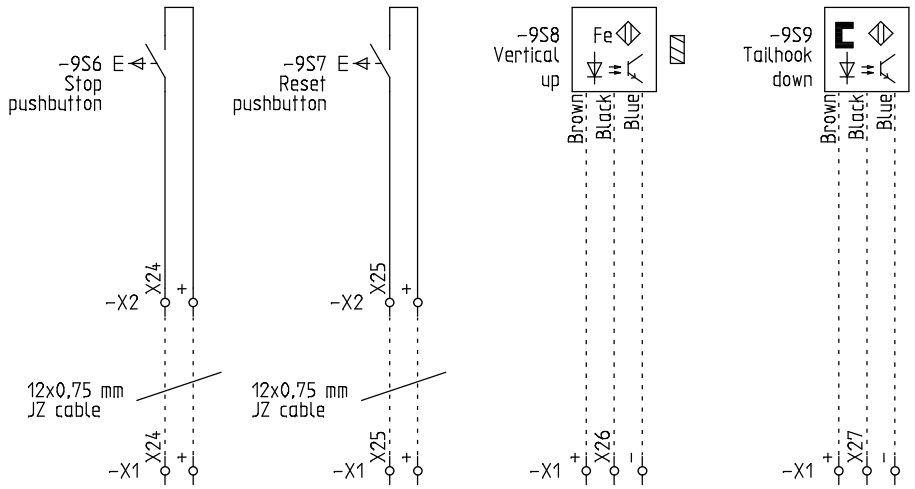

HEDENSTED GRUPPEN
Vejlevej 15, DK-8722 HEDENSTED
(+45) 75891244 - Fax: (+45) 75891180

Ext. connections 3/6

Projektnavn:
Combi_Cut_2015_02_FX3G

Tegnet: KL
Rettet: 27-05-2016

Næste Side: 20
Opr: 05-12-2014
Printdato: 02-06-2010
Side nr.: 19
Side af: 26

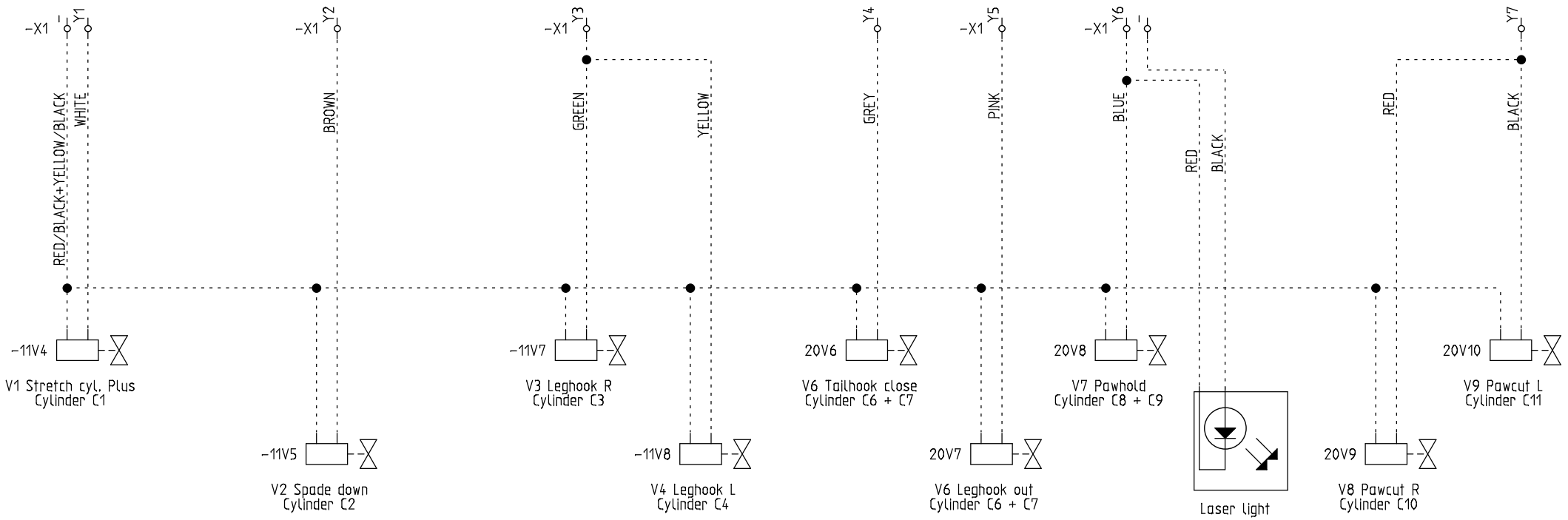

HEDENSTED GRUPPEN
Vejlevej 15, DK-8722 HEDENSTED
(+45) 75891244 - Fax: (+45) 75891180

Ext. connections 4/6

Projektnavn: Combi_Cut_2015_02_FX3G

Tegnet: KL
Rettet: 27-05-2016

Næste Side: 21
Opr: 05-12-2014
Printdato: 02-06-2010
Side nr.: 20
Side af: 26

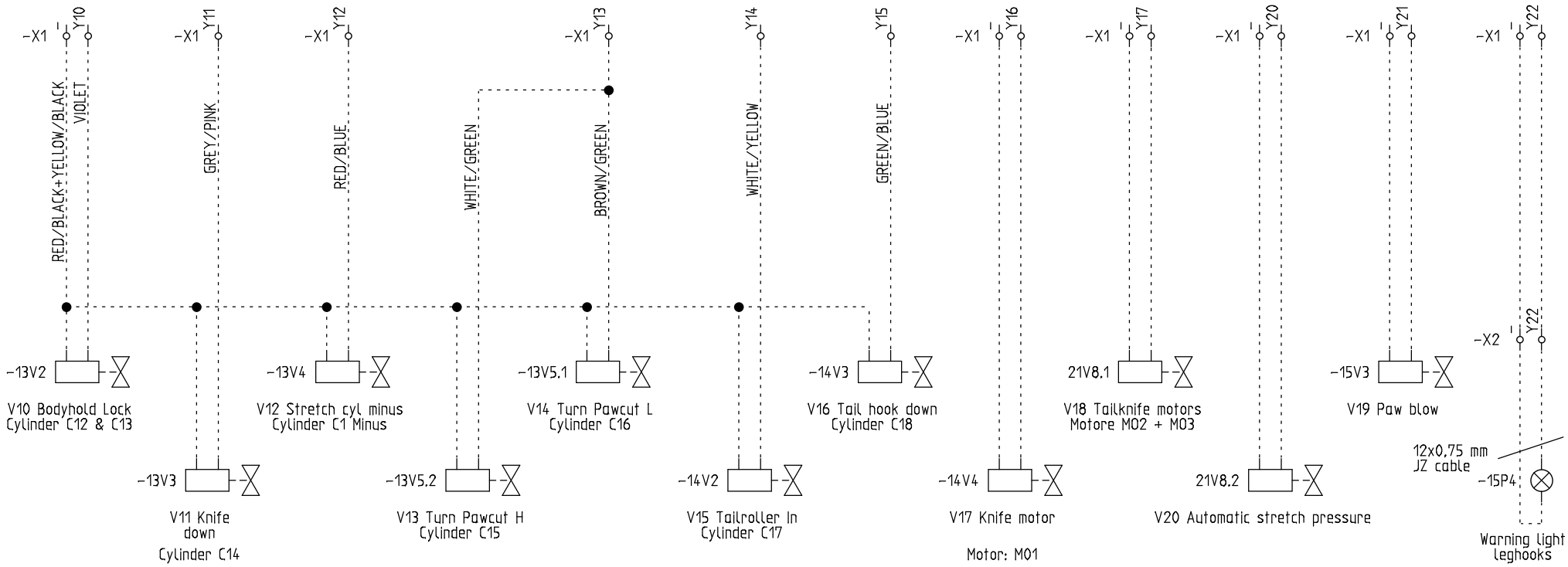

HEDENSTED GRUPPEN
Vejlevej 15, DK-8722 HEDENSTED
(+45) 75891244 - Fax: (+45) 75891180

Ext.connections 5/6

Projektnavn:
Combi_Cut_2015_02_FX3G

Tegnet: KL
Rettet: 27-05-2016

Næste Side: 22
Opr: 05-12-2014
Printdato: 02-06-2010
Side nr.: 21
Side af: 26

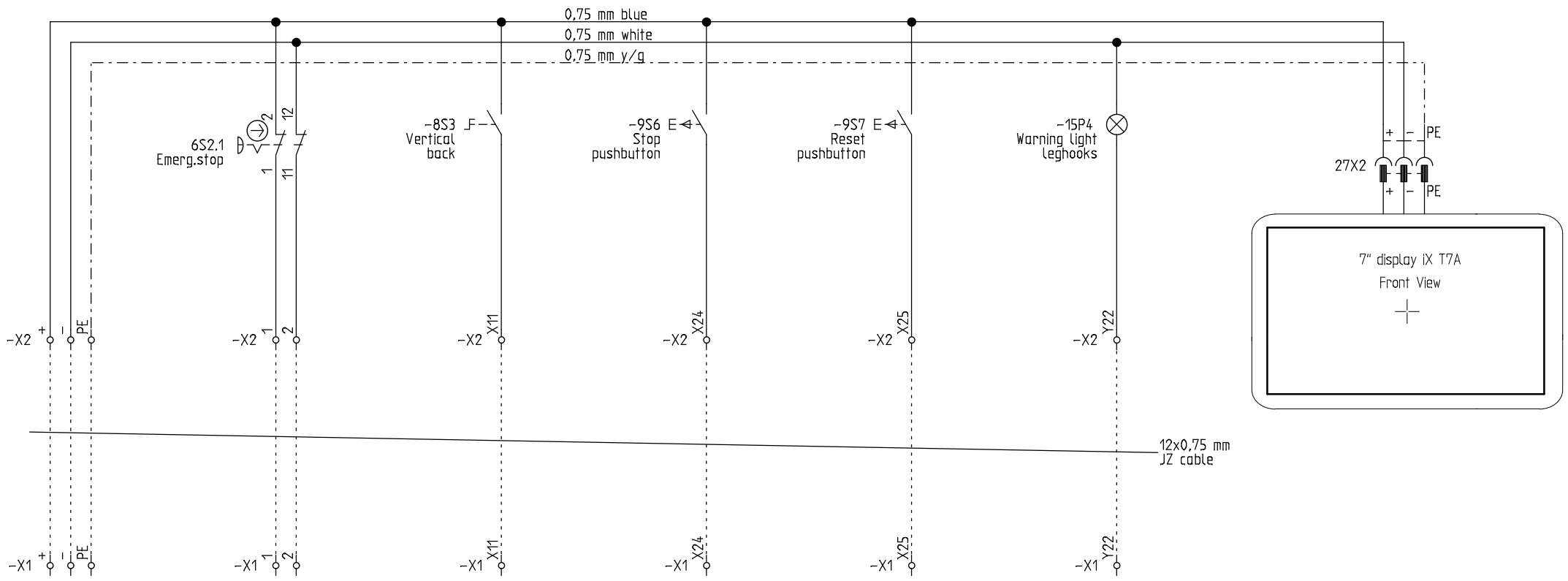

HEDENSTED GRUPPEN
Vejlevej 15, DK-8722 HEDENSTED
(+45) 75891244 - Fax: (+45) 75891180

Ext.Conn. 6/6

Projektnavn: Combi_Cut_2015_02_FX3G

Tegnet: KL

Rettet: 27-05-2016

Næste Side: 23

Opr: 05-12-2014

Printdato: 02-06-2010

Side nr.: 22

Side af: 26

Terinals X1, main panel

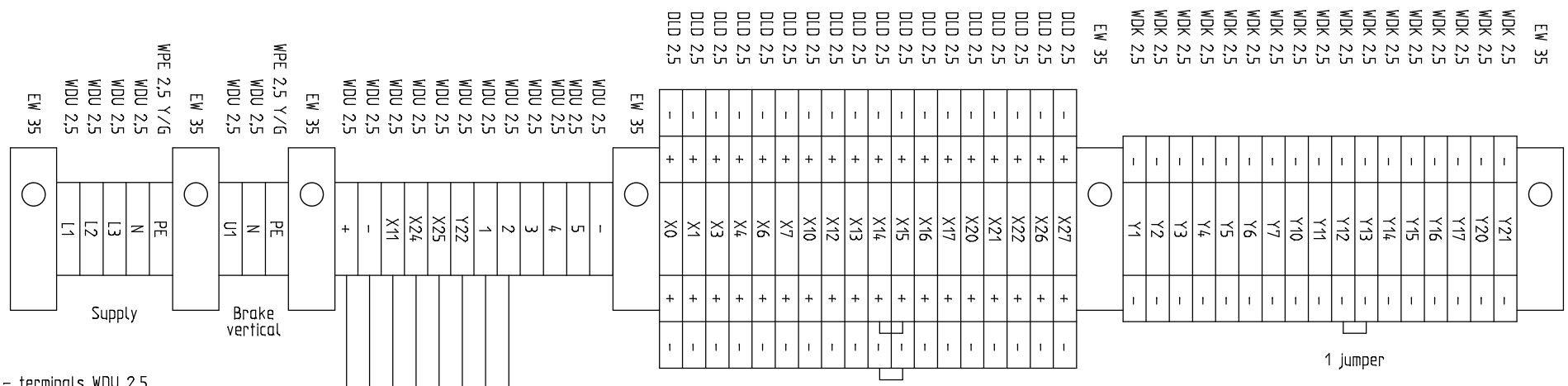

26 - terminals WDU 2,5
40 08 190 099 633

4 - End plates WAP 2,5-10
40 08 190 455 484

2 - earth terminals WPE 2,5 Y/G
40 08 190 143 640

18 - terminals DLD 2,5
40 08 190 091 415

1 - End plate AP DLD
40 08 190 180 508

17 - terminals WDK 2,5
40 08 190 169 527

1 - End plate WAP DK 2,5
40 08 190 101 954

6 - 10-pol cross connector Q10
40 08 190 135 089

8 - end bracket EW35
40 08 190 181 314

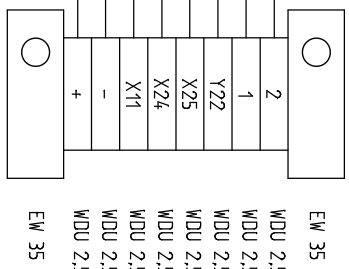

Terminals X2, operators panel

HEDENSTED GRUPPEN
Vejlevej 15, DK-8722 HEDENSTED
(+45) 75891244 - Fax: (+45) 75891180

Terminals

Projektnavn: Combi_Cut_2015_02_FX3G			Tegnet: KL
			Rettet: 25-04-2016
Næste Side: 24	Printdato: 22-06-2011	Side nr.: 23	Side af: 26
Opr: 05-12-2014			

1	2	3	4	5	6	7	8	9	10

HEDENSTED GRUPPEN
Vejlevej 15, DK-8722 HEDENSTED
(+45) 75891244 - Fax: (+45) 75891180

Empty page

Projektnavn:
Combi_Cut_2015_02_FX3G

Tegnet: KL
Rettet: 25-04-2016

Næste Side: 26
Opr: 05-12-2014

Printdato: 21-06-2011

Side nr.: 24

Side af: 26

HEDENSTED GRUPPEN
Vejlevej 15, DK-8722 HEDENSTED
(+45) 75891244 - Fax: (+45) 75891180

X0	Encoder vertical ch. A		Y0	Reset emergency circuit
X1	Encoder vertical ch. B		Y1	Stretch cylinder plus
X2	Emergency circuit OK		Y2	Spade down
X3	Encoder knife ch. A		Y3	Leghooks close
X4	Encoder knife ch. B		Y4	Tailhook close
X5	Emergency switch OK		Y5	Leghook out
X6	Encoder stretch ch. A		Y6	Pawhold close
X7	Encoder stretch ch. B		Y7	Paw cut
X10	Leghooks out		Y10	Close bodyhold
X11	Vertical reverse		Y11	Crossknife down
X12	Foot switch		Y12	Stretch cylinder, minus
X13	Ref.switch knife		Y13	Turn paw cut
X14	Ref.switch stretch		Y14	Tailroller in
X15	Spade up		Y15	Tailhook down
X16	Spade down		Y16	Cross knife motor
X17	Knife down		Y17	Tail knife motors
X20	Leghooks in		Y20	Not used
X21	Tailhook closed		Y21	Paw blow
X22	Bodyhold closed		Y22	Warning light vertical reverse
X23	Inverters OK		Y23	Not used
X24	Stop button		Y24	Vertical down
X25	Reset button		Y25	Vertical up
X26	Vertical in UP position		Y26	Knife left
X27	Tailhook down		Y27	Knife right

IN / OUT list

Projektnavn: Combi_Cut_2015_02_FX3G

Næste Side: 27
Opr: 05-12-2014

Printdato: 02-06-2010

Side nr.: 26

Side af: 26

Tegnet: KL
Rettet: 25-04-2016

1	2	3	4	5	6	7	8	9	10

DIAGRAM	PLC PROGRAM	MAC PROGRAM	FREKVENSOMFORMERE	KOMMENTAR
Combi_Cut_2015_01_FX3G	Combi_Cut_2010_04_FX3G	Combi_Cut_2015_01_FX3G		CC2010 model changed to T7A HMI
Combi_Cut_2015_02_FX3G	Combi_Cut_2010_04_FX3G	Combi_Cut_2015_01_FX3G		Inverter + Low leak filter + breake resistance changed ti M200 Soft starter added

HEDENSTED GRUPPEN
Vejlevej 15, DK-8722 HEDENSTED
(+45) 75891244 - Fax: (+45) 75891180

Versions

Projektnavn: Combi_Cut_2015_02_FX3G

Tegnet: KL

Rettet: 25-04-2016

Næste Side: Opr: 05-12-2014

Printdato: 02-06-2010

Side nr.: 27

Side af: 26

Customer: Hedensted Gruppen A/S

Project: Combi cut_FX3G 2015_03 3X400+N

Hedensted Gruppen A/S
Vejlevej 15a
DK-8722 Hedensted
TLF: 75 89 12 44
FAX: 75 89 11 80

Index

Information C
09-10-2017 13:47:10

Declaration of incorporation D
17-08-2017 14:30:46

Main Circuit 1
09-10-2017 13:01:44

Main Circuit motor 2
03-10-2017 14:32:48

Main Circuit motor 3
09-10-2017 13:30:54

230VAC & 24VDC Control Circuit 4
09-10-2017 13:04:12

Emergency stop relay 5
09-10-2017 13:05:12

Emergency stop Circuit 6
09-10-2017 13:11:30

7
03-10-2017 11:02:54

PLC 8
10-10-2017 10:01:48

PLC Input X0 - X7 9
09-10-2017 13:31:54

PLC Input X10 - X17 10
09-10-2017 13:32:16

PLC Input X20 - X27 11
09-10-2017 13:32:34

PLC analog V-OUT 1 AND 2 12
03-10-2017 14:27:48

PLC Output Y0 - Y7 13
09-10-2017 13:33:22

PLC Output Y10 - Y17 14
09-10-2017 13:34:06

PLC Output Y20 - Y27 15
09-10-2017 13:40:54

PLC list 16
09-10-2017 13:34:28

Cable list 18
09-10-2017 13:01:50

Information

WIRE IDENTIFICATION:

The wire is identified with the terminal number of the component.

WIRE COLOUR:

MAIN CIRCUIT:	Phase	Black
	Neutral	Light blue
DC CONTROL CIRCUIT:	24VDC	Dark blue
	0VDC	White

THE FOLLOWING COLOUR ID IS TAKEN FROM DS/EN 60757

BK BLACK
BN BROWN
RD RED
OG ORANGE
YE YELLOW
GN GREEN
BU BLUE
VT VIOLET
GY GREY
WH WHITE
PK PINK

ALL SYMBOLS USED IS TAKEN FROM DS/EN 166

The following mounting wires must be used unless other instructions is noted.
Main circuit:

400VAC Phase = H07V2-K 1x2,5-4-6-10-16-25-35-50mm2 Black
400VAC Neutral = H07V2-K 1x2,5-4-6-10-16-25-35-50mm2 Light Blue
400VAC Ground = H07V2-K 1x2,5-4-6-10-16-25-35-50mm2 Yellow/Green

230VAC Phase = H07V2-K 1x1,5mm2 Black
230VAC Neutral = H07V2-K 1x1,5mm2 Light Blue
230VAC Ground = H07V2-K 1x1,5mm2 Yellow/Green

24VDC Phase = H07V2-K 1x0,75mm2 Dark Blue
24VDC Neutral = H07V2-K 1x0,75mm2 White
24VDC Ground = H07V2-K 1x0,75mm2 Yellow/Green

All wire ends must be fitted with pins or cable shoes before mounting.

Marking of components, terminals, wires, cables.
Are according to standard DS / EN 60204-1 and electrical diagram

DECLARATION OF INCORPORATION

Directive 2006/42/EF, Annex II, B

Manufacturer

Firm: VS AUTOMATIC A/S
Address: Ormhøjgårdvej 15
DK-8700 Horsens

Phone: +45 75 64 18 99
Fax: +45 75 64 18 09
Email: info@vs-automatic.dk

Herewith declares that

Component: Controlpanel
Type: Combi cut 2015_03 3X400
Year of manufator: 2017

is intended to be incorporated into machinery or to be assembled with other machinery to constitude machinery covered by Directive 2006/42/EC

does therefor not in every respect comply with the provisions of this directive

does comply with the provisions of the following other EC directives

EC directives

Machine directive 2006/42/EC

EC low-voltage directives 2014/35/EU

EC EMC directive 2014/30/EU

Harmonized standards

EN60204-1 Safety of Machinery Electrical Equipment of Machines

EN60439-1 Low-voltage switchgear and controlgear assemblies part 1: Type-tested and partially type-tested assemblies

And furthermore declares that it is not allowed to put the machinery into service until the machinery into which it is to be incorporated or of which it si to be a component has been found and declarede to be in conformity with the provisions of Directive 2006/42/EU and with national implementation legislation i.e. as a whole, including the machinery referred to in this declaration

Machine: Combi cut_FX3G 2015_03 3X400+N
Machine No.: 207802
Type: Year of manufactor: 2017
Manufactor: Hedensted Gruppen A/S

Indentification of signature:

Firm: VS AUTOMATIC A/S
Address: Ormhøjgårdvej 15
DK-8700 Horsens

Date: Signature

10-10-2017

Torben Steffensen

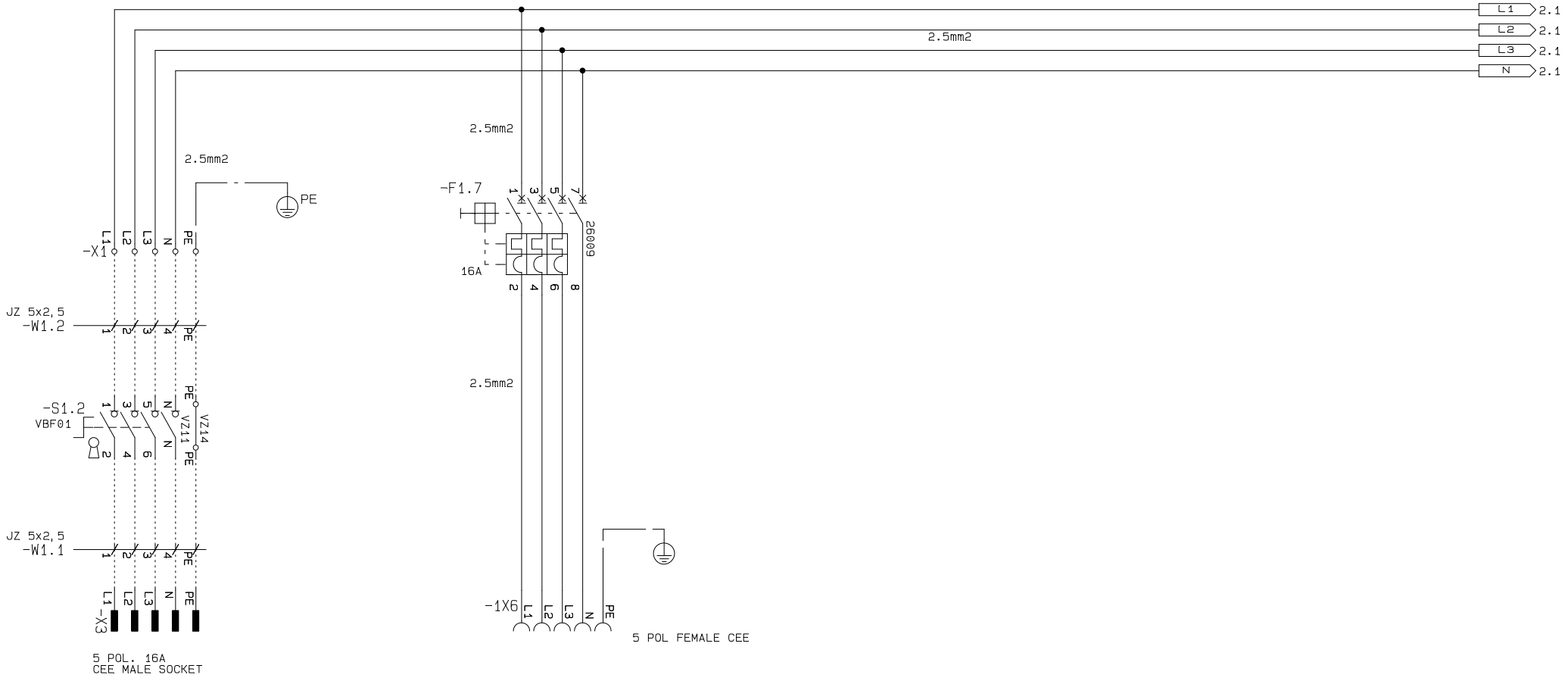

1 2 3 4 5 6 7 8 9 10 11 12 13 14 15 16 17 18

SUPLLY 3X400+N+PE
IB 6A
MAX FUSE 16 A D02
IKMAX 6KA
IKMIN MIN. 200A

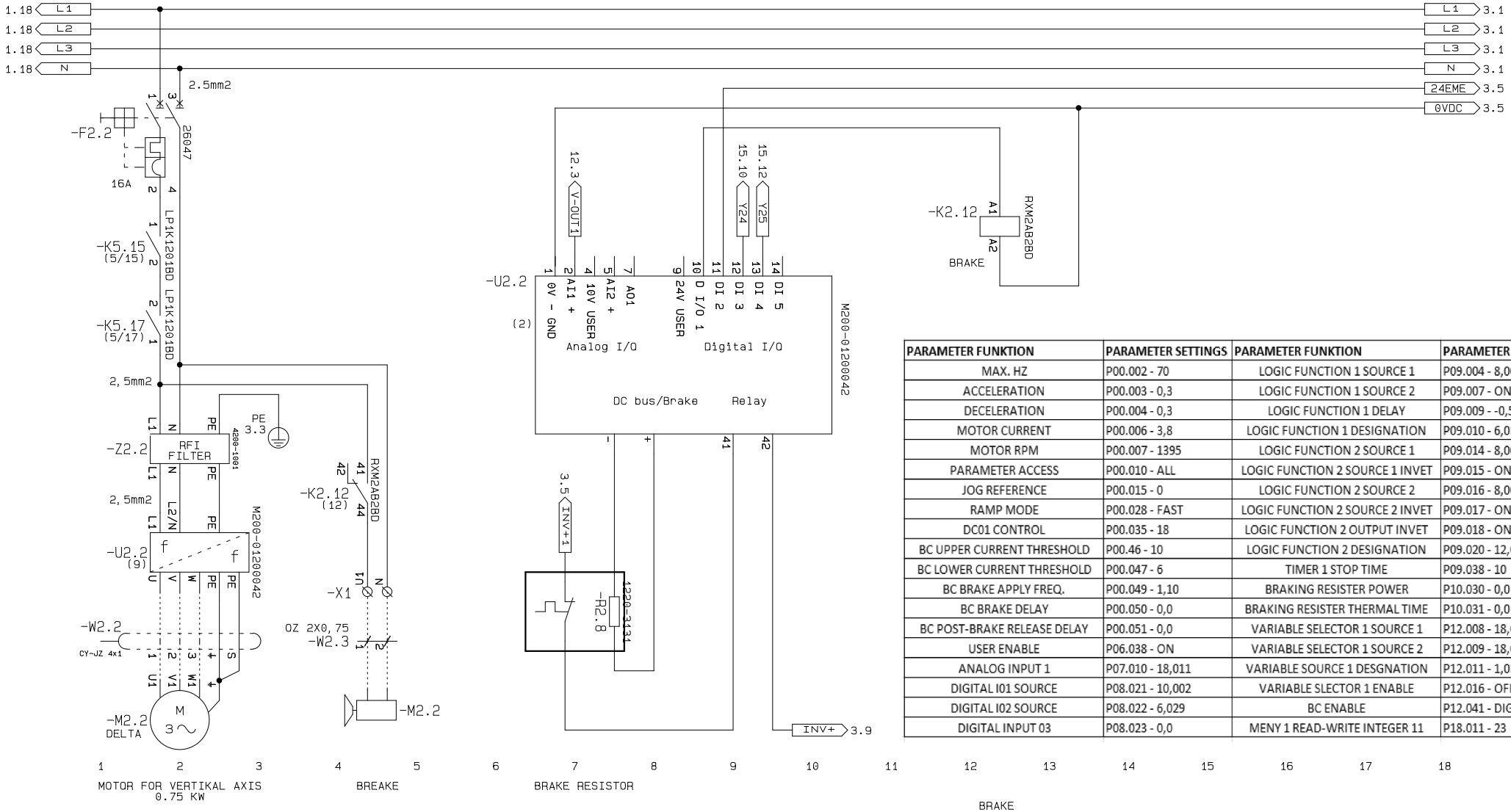

PARAMETER FUNKTION	PARAMETER SETTINGS	PARAMETER FUNKTION	PARAMETER SETTINGS
MAX. HZ	P00.002 - 70	LOGIC FUNCTION 1 SOURCE 1	P09.004 - 8,003
ACCELERATION	P00.003 - 0,3	LOGIC FUNCTION 1 SOURCE 2	P09.007 - ON
DECELERATION	P00.004 - 0,3	LOGIC FUNCTION 1 DELAY	P09.009 - -0,5
MOTOR CURRENT	P00.006 - 3,8	LOGIC FUNCTION 1 DESIGNATION	P09.010 - 6,030
MOTOR RPM	P00.007 - 1395	LOGIC FUNCTION 2 SOURCE 1	P09.014 - 8,003
PARAMETER ACCESS	P00.010 - ALL	LOGIC FUNCTION 2 SOURCE 1 INVET	P09.015 - ON
JOG REFERENCE	P00.015 - 0	LOGIC FUNCTION 2 SOURCE 2	P09.016 - 8,004
RAMP MODE	P00.028 - FAST	LOGIC FUNCTION 2 SOURCE 2 INVET	P09.017 - ON
DC01 CONTROL	P00.035 - 18	LOGIC FUNCTION 2 OUTPUT INVET	P09.018 - ON
BC UPPER CURRENT THRESHOLD	P00.46 - 10	LOGIC FUNCTION 2 DESIGNATION	P09.020 - 12,016
BC LOWER CURRENT THRESHOLD	P00.047 - 6	TIMER 1 STOP TIME	P09.038 - 10
BC BRAKE APPLY FREQ.	P00.049 - 1,10	BRAKING RESISTER POWER	P10.030 - 0,0
BC BRAKE DELAY	P00.050 - 0,0	BRAKING RESISTER THERMAL TIME	P10.031 - 0,0
BC POST-BRAKE RELEASE DELAY	P00.051 - 0,0	VARIABLE SELECTOR 1 SOURCE 1	P12.008 - 18,011
USER ENABLE	P06.038 - ON	VARIABLE SELECTOR 1 SOURCE 2	P12.009 - 18,012
ANALOG INPUT 1	P07.010 - 18,011	VARIABLE SOURCE 1 DESGNATION	P12.011 - 1,036
DIGITAL I01 SOURCE	P08.021 - 10,002	VARIABLE SLECTOR 1 ENABLE	P12.016 - OFF
DIGITAL I02 SOURCE	P08.022 - 6,029	BC ENABLE	P12.041 - DIGITAL IO
DIGITAL INPUT 03	P08.023 - 0,0	MENY 1 READ-WRITE INTEGER 11	P18.011 - 23

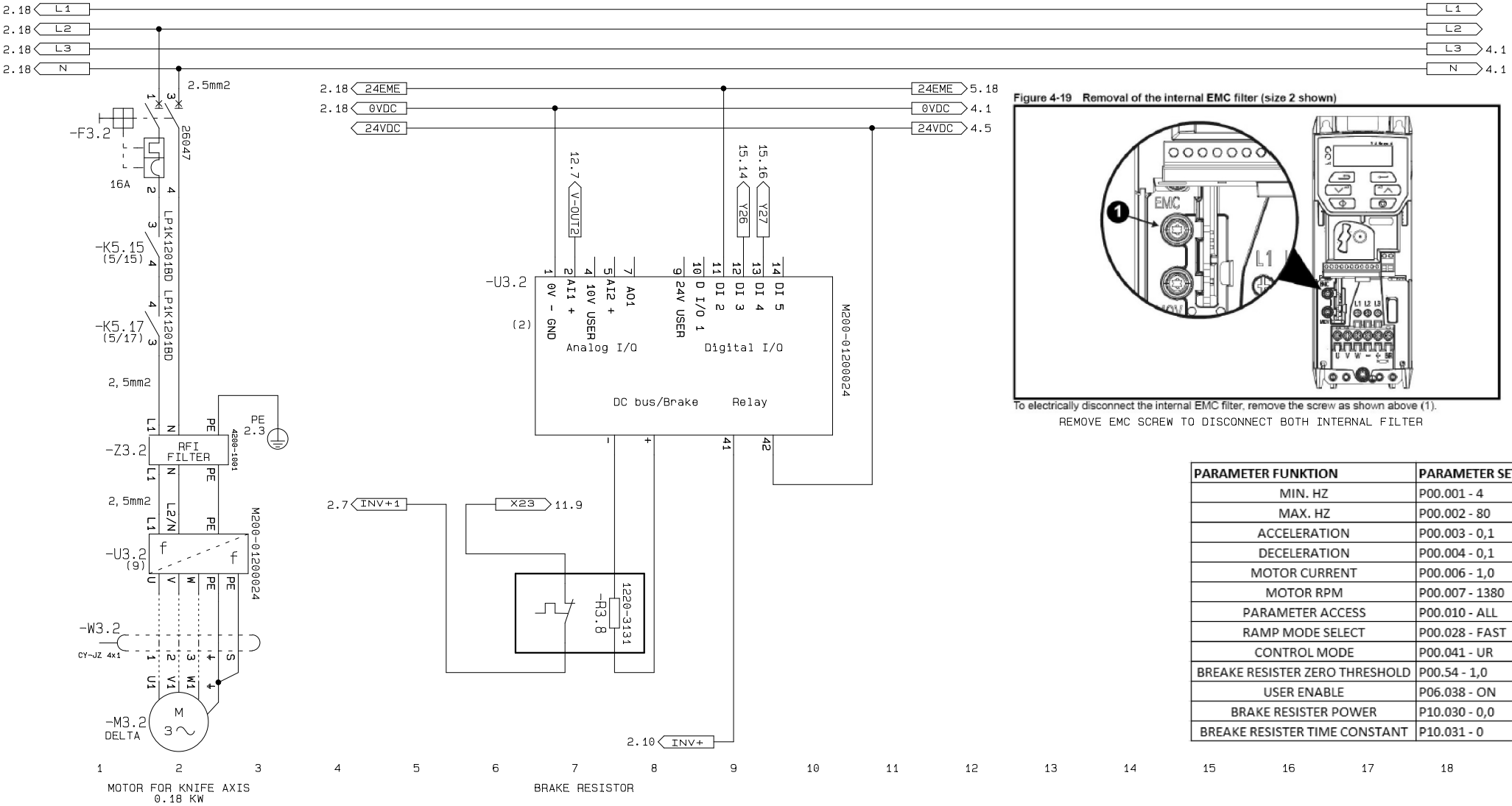

Figure 4-19 Removal of the internal **EMC** filter (size 2 shown)

To electrically disconnect the internal EMC filter, remove the screw as shown above (1).

REMOVE EMC SCREW TO DISCONNECT BOTH INTERNAL FILTER

PARAMETER FUNKTION	PARAMETER SETTINGS
MIN. HZ	P00.001 - 4
MAX. HZ	P00.002 - 80
ACCELERATION	P00.003 - 0,1
DECELERATION	P00.004 - 0,1
MOTOR CURRENT	P00.006 - 1,0
MOTOR RPM	P00.007 - 1380
PARAMETER ACCESS	P00.010 - ALL
RAMP MODE SELECT	P00.028 - FAST
CONTROL MODE	P00.041 - UR
BREAKE RESISTER ZERO THRESHOLD	P00.54 - 1,0
USER ENABLE	P06.038 - ON
BRAKE RESISTER POWER	P10.030 - 0,0
BREAKE RESISTER TIME CONSTANT	P10.031 - 0

3.18 L3
3.18 N
2,5mm2
3.11 24VDC
24VDC 5.1
230VAC 8.1
-E4.2
1
3
25972
6A
2
4
1,5mm2
PE
L
N
+
-T4.3
SPD 24601
24VDC
PE
-X4.9
L
N
PE
GW9552
SERVICE SOCKET
3.11 0VDC
0VDC 5.1
0VAC 8.1
1
2
3
4
5
6
7
8
9
10
11
12
13
14
15
16
17
18

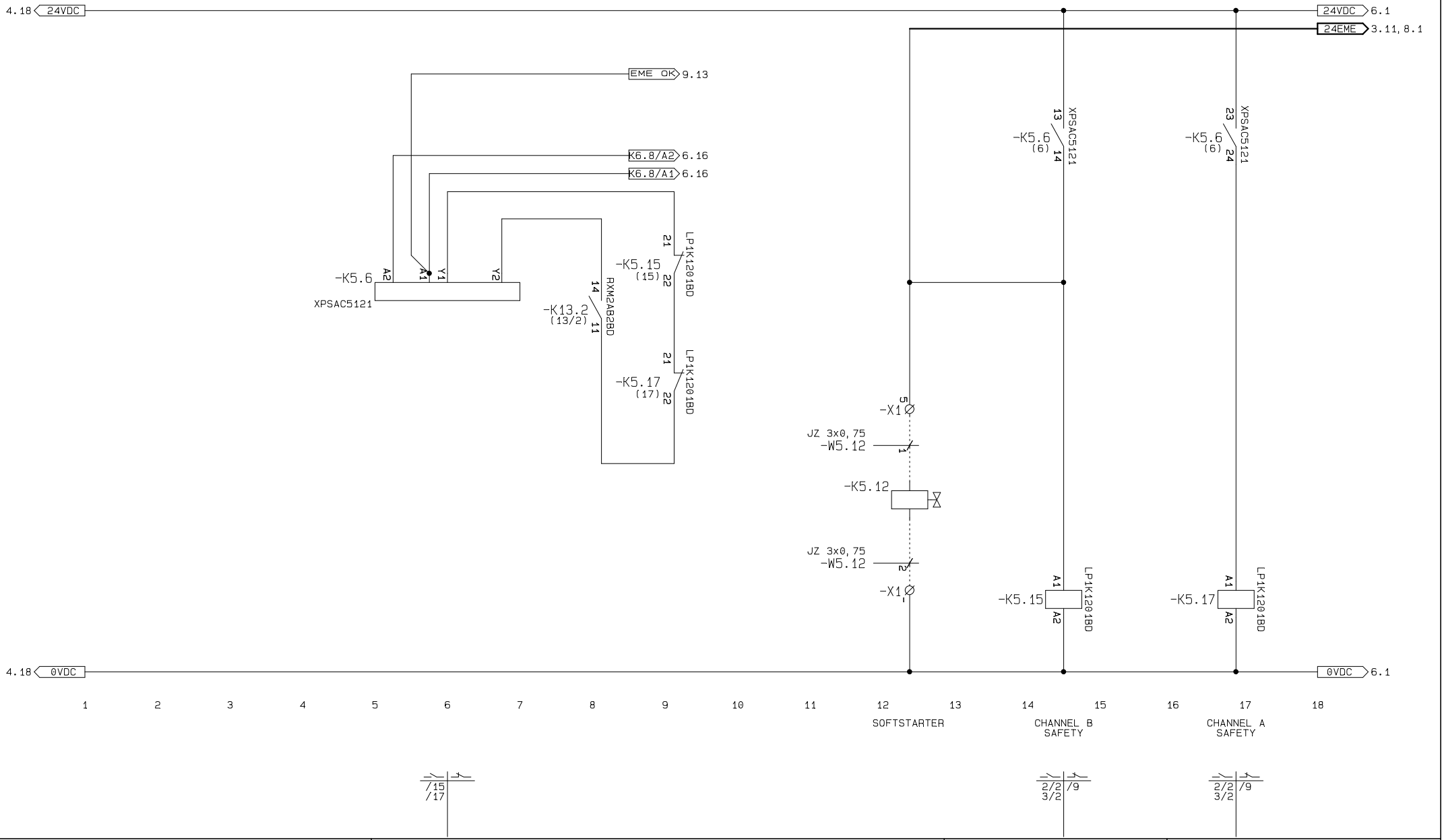
4.18 24VDC
24VDC 6.1
24EME 3.11, 8.1
EME OK 9.13
K6.8/A2 6.16
K6.8/A1 6.16
-K5.6
XPSAC5121
A2
A1
Y1
Y2
-K5.15
(15)
LP1K1201BD
21
22
-K13.2
(13/2)
RXM2AB2BD
14
11
-K5.17
(17)
-K5.6
(6)
XPSAC5121
13
14
23
24
-X1
5
JZ 3x0,75
-W5.12
1
-K5.12
JZ 3x0,75
-W5.12
2
-X1
-K5.15
-K5.17
A1
A2
LP1K1201BD
4.18 0VDC
0VDC 6.1
1 2 3 4 5 6 7 8 9 10 11 12 13 14 15 16 17 18
SOFTSTARTER
CHANNEL B SAFETY
CHANNEL A SAFETY
/15
/17
2/2
3/2
/9

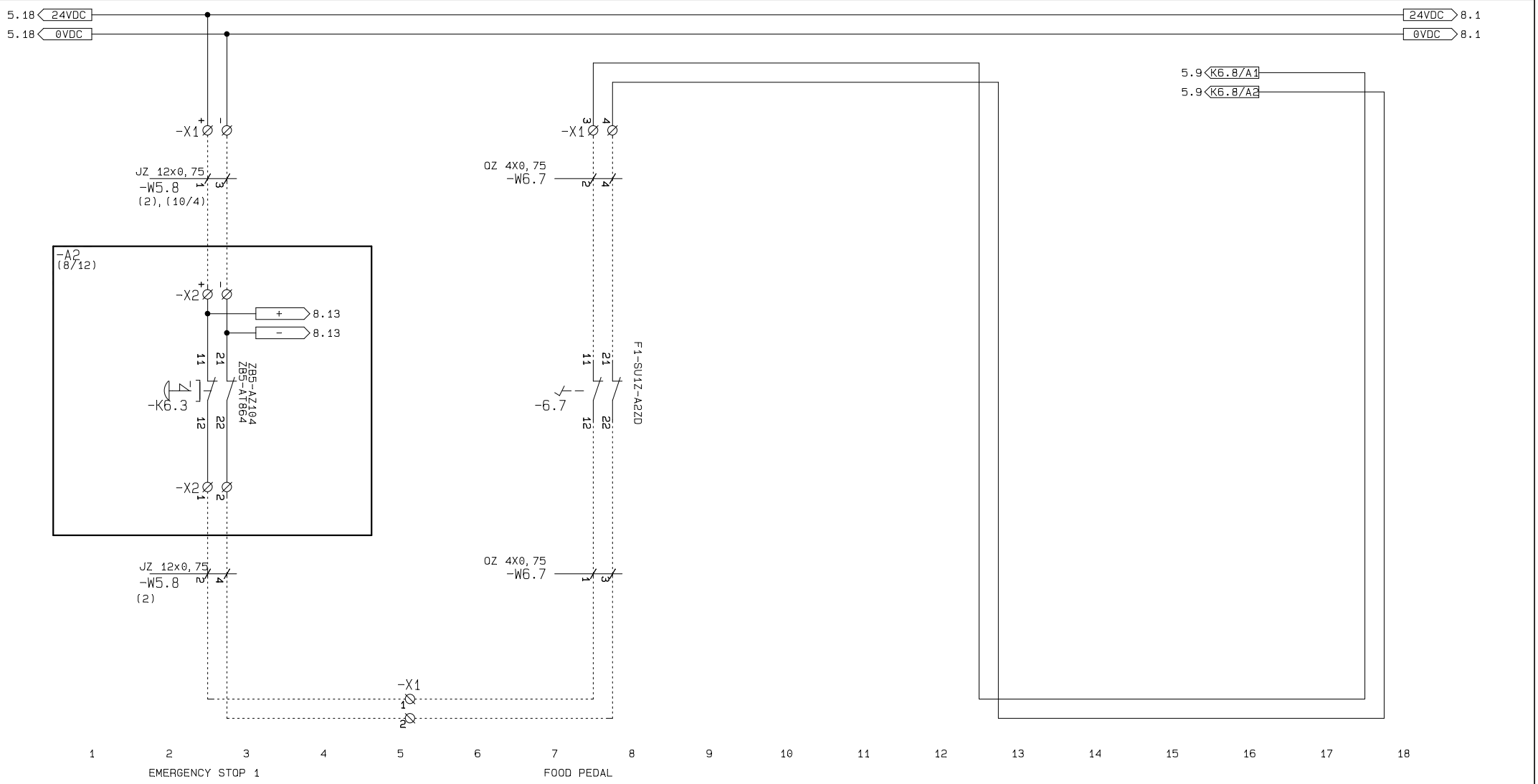
5.18 24VDC
5.18 0VDC
24VDC 8.1
0VDC 8.1
5.9 K6.8/A1
5.9 K6.8/A2
-X1
JZ 12x0,75
-W5.8
(2),(10/4)
OZ 4X0,75
-W6.7
-A2
(8/12)
-X2
8.13
8.13
-K6.3
ZB5-AZ104
ZB5-AT864
-6.7
F1-SU1Z-A2ZD
JZ 12x0,75
-W5.8
(2)
OZ 4X0,75
-W6.7
-X1
EMERGENCY STOP 1
FOOD PEDAL

1 2 3 4 5 6 7 8 9 10 11 12 13 14 15 16 17 18

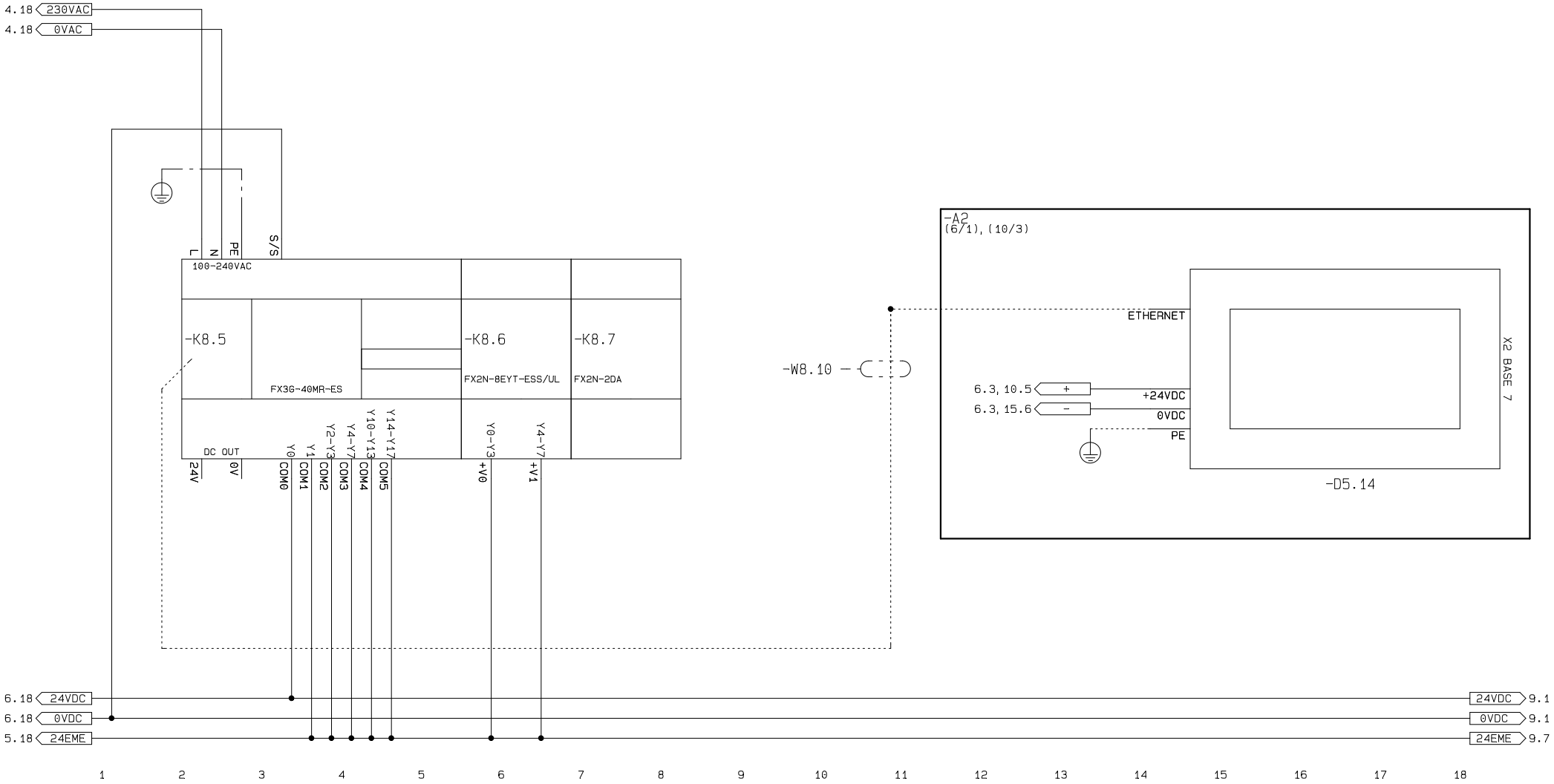
4.18 230VAC
4.18 0VAC
L
N
PE
S/S
100-240VAC
-K8.5
FX3G-40MR-ES
-K8.6
FX2N-8EYT-ESS/UL
-K8.7
FX2N-2DA
DC OUT
24V
0V
Y0
COM0
Y1
COM1
Y2-Y3
COM2
Y4-Y7
COM3
Y10-Y13
COM4
Y14-Y17
COM5
Y0-Y3
+V0
Y4-Y7
+V1
-W8.10
-A2
(6/1), (10/3)
ETHERNET
6.3, 10.5
+
+24VDC
6.3, 15.6
-
0VDC
PE
X2 BASE 7
-D5.14
6.18 24VDC
6.18 0VDC
5.18 24EME
24VDC 9.1
0VDC 9.1
24EME 9.7
1
2
3
4
5
6
7
8
9
10
11
12
13
14
15
16
17
18

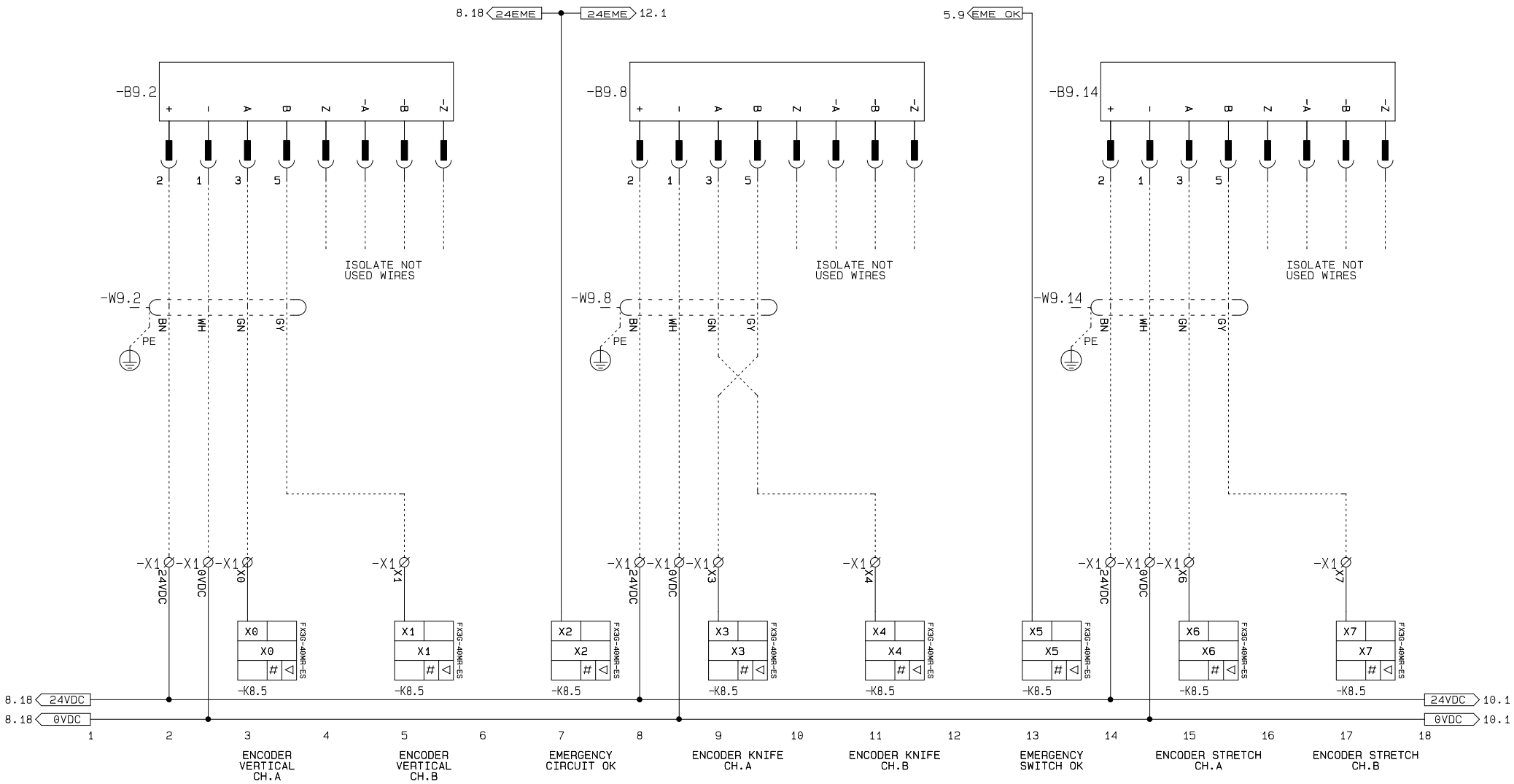
8.18 24EME
24EME 12.1
5.9 EME OK
-B9.2
-B9.8
-B9.14
+ - A B Z -A -B -Z
2 1 3 5
ISOLATE NOT USED WIRES
-W9.2
-W9.8
-W9.14
BN WH GN GY
PE
-X1 24VDC
-X1 0VDC
-X1 X0
-X1 X1
-X1 X3
-X1 X4
-X1 X6
-X1 X7
X0 X1 X2 X3 X4 X5 X6 X7
FX3G-40MR-ES
-K8.5
8.18 24VDC
8.18 0VDC
24VDC 10.1
0VDC 10.1
1 2 3 4 5 6 7 8 9 10 11 12 13 14 15 16 17 18
ENCODER VERTICAL CH.A
ENCODER VERTICAL CH.B
EMERGENCY CIRCUIT OK
ENCODER KNIFE CH.A
ENCODER KNIFE CH.B
EMERGENCY SWITCH OK
ENCODER STRETCH CH.A
ENCODER STRETCH CH.B

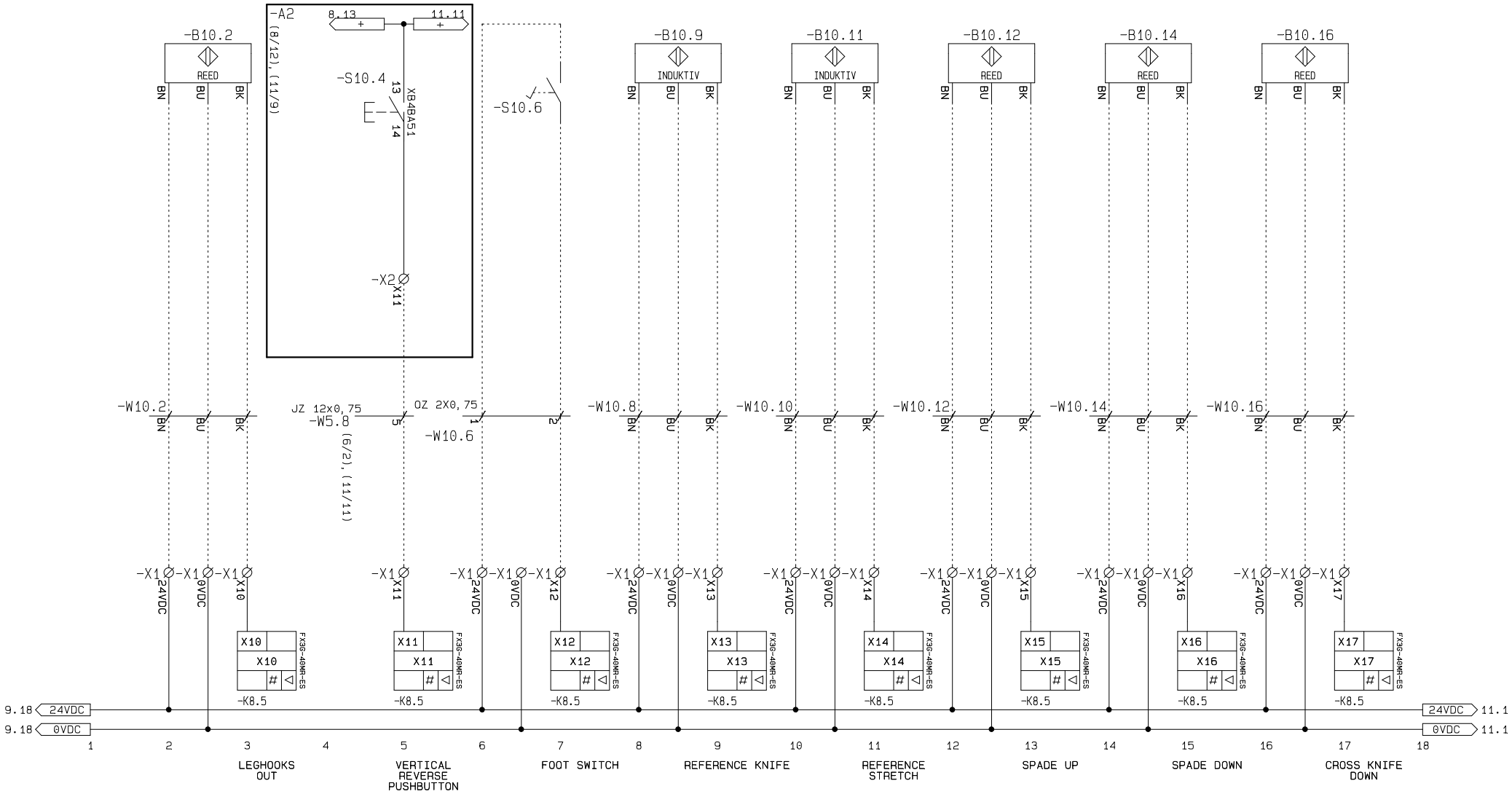
-A2
(8/12),(11/9)
8.13
11.11
-S10.4
13
14
XB4BA51
-X2
X11
-S10.6
-B10.2
REED
-B10.9
INDUKTIV
-B10.11
INDUKTIV
-B10.12
REED
-B10.14
REED
-B10.16
REED
BN
BU
BK
-W10.2
JZ 12x0,75
-W5.8
(6/2),(11/11)
OZ 2X0,75
-W10.6
-W10.8
-W10.10
-W10.12
-W10.14
-W10.16
-X1
24VDC
0VDC
X10
X11
X12
X13
X14
X15
X16
X17
FX3G-40MR-ES
-K8.5
9.18
24VDC
0VDC
11.1
1
2
3
4
5
6
7
8
9
10
11
12
13
14
15
16
17
18
LEGHOOKS OUT
VERTICAL REVERSE PUSHBUTTON
FOOT SWITCH
REFERENCE KNIFE
REFERENCE STRETCH
SPADE UP
SPADE DOWN
CROSS KNIFE DOWN

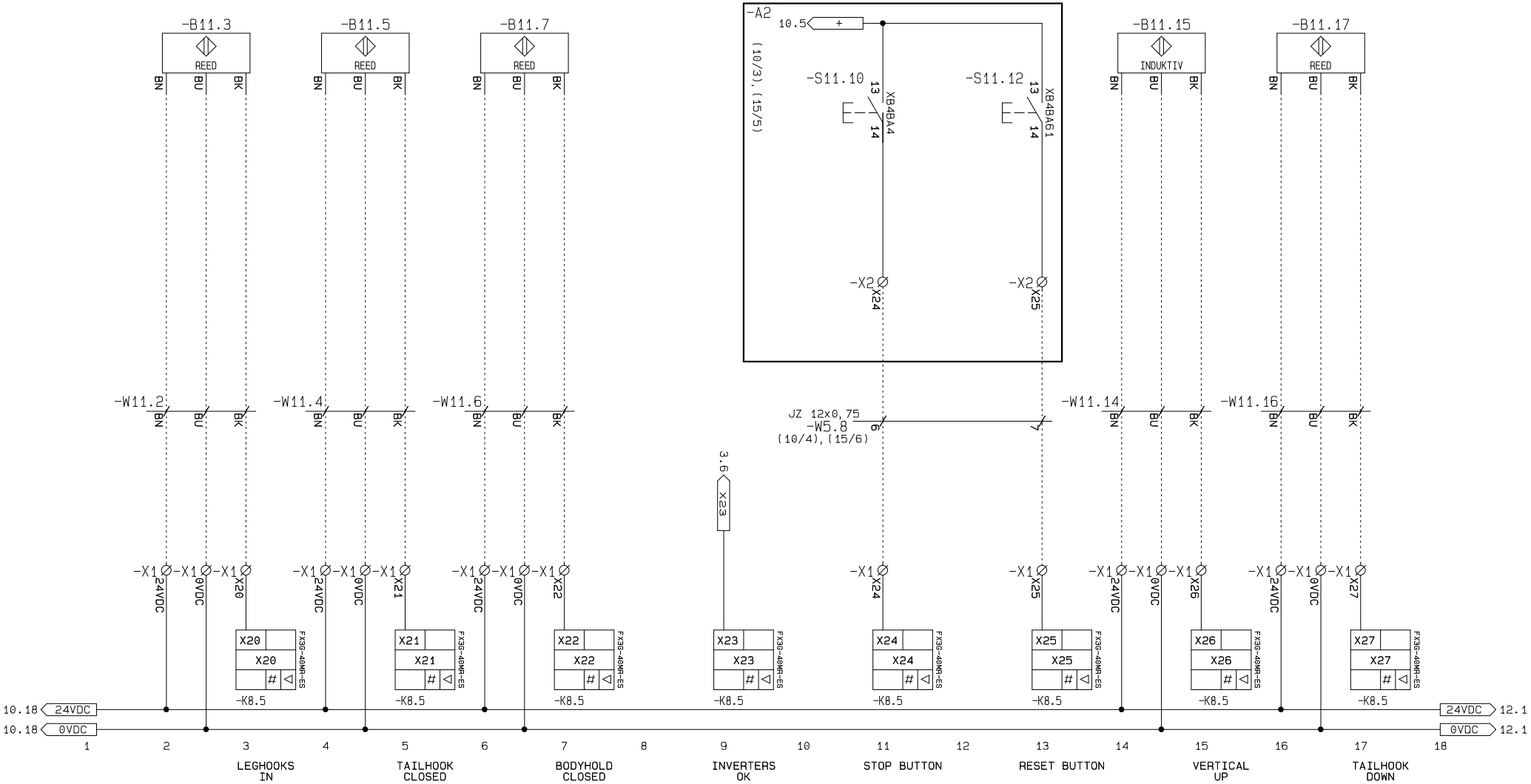
-B11.3
REED
-B11.5
REED
-B11.7
REED
-A2
10.5
+
(10/3),(15/5)
-S11.10
13
14
XB4BA4
-S11.12
13
14
XB4BA61
-X2
X24
-X2
X25
-B11.15
INDUKTIV
-B11.17
REED
BN
BU
BK
-W11.2
-W11.4
-W11.6
JZ 12x0,75
-W5.8
(10/4),(15/6)
6
7
-W11.14
-W11.16
3.6
X23
-X1
24VDC
0VDC
X20
X21
X22
X24
X25
X26
X27
FX3G-40MR-ES
-K8.5
10.18
24VDC
0VDC
12.1
1
2
3
4
5
6
7
8
9
10
11
12
13
14
15
16
17
18
LEGHOOKS IN
TAILHOOK CLOSED
BODYHOLD CLOSED
INVERTERS OK
STOP BUTTON
RESET BUTTON
VERTICAL UP
TAILHOOK DOWN

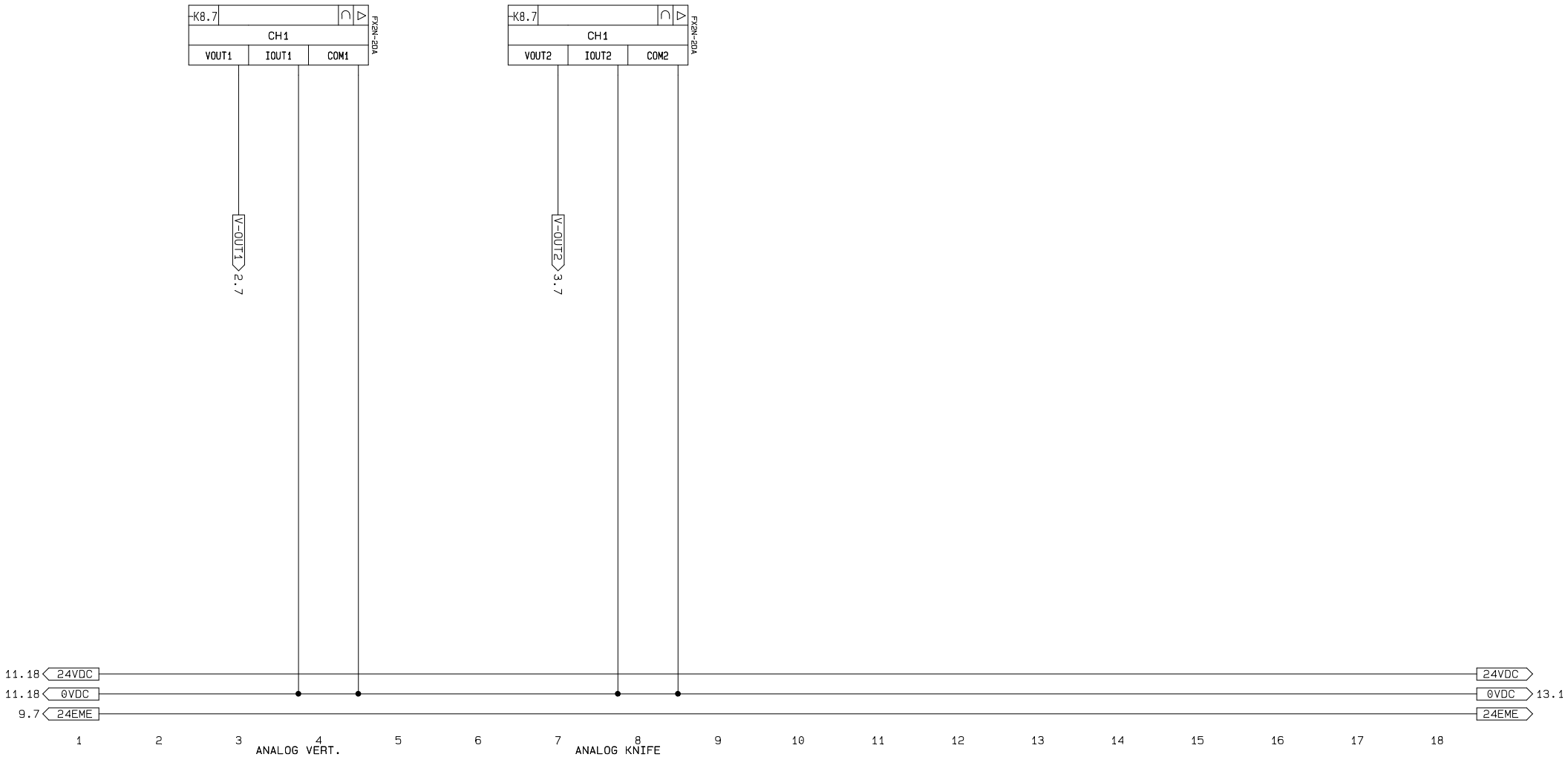
-K8.7
CH1
VOUT1
IOUT1
COM1
FX2N-2DA
-K8.7
CH1
VOUT2
IOUT2
COM2
FX2N-2DA
V-OUT1
2.7
V-OUT2
3.7
11.18
24VDC
11.18
0VDC
9.7
24EME
24VDC
0VDC
13.1
24EME
1
2
3
4
5
6
7
8
9
10
11
12
13
14
15
16
17
18
ANALOG VERT.
ANALOG KNIFE

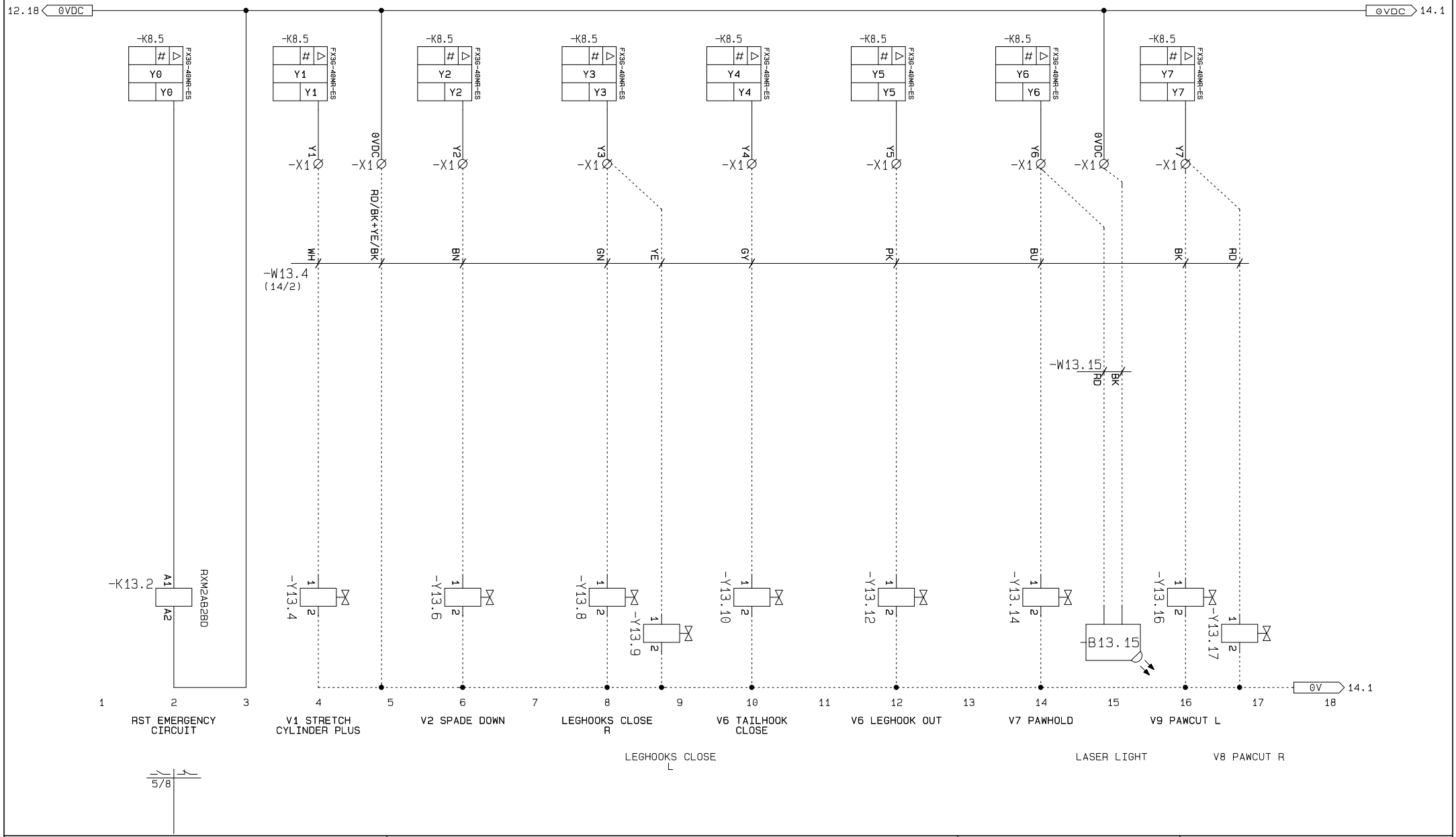
12.18
0VDC
14.1
-K8.5
FX3G-40MR-ES
Y0
Y1
Y2
Y3
Y4
Y5
Y6
Y7
-X1
RD/BK+YE/BK
WH
BN
GN
YE
GY
PK
BU
BK
RD
-W13.4
(14/2)
-W13.15
-K13.2
A1
A2
RXM2AB2BD
-Y13.4
-Y13.6
-Y13.8
-Y13.9
-Y13.10
-Y13.12
-Y13.14
-Y13.16
-Y13.17
-B13.15
0V
RST EMERGENCY CIRCUIT
V1 STRETCH CYLINDER PLUS
V2 SPADE DOWN
LEGHOOKS CLOSE R
LEGHOOKS CLOSE L
V6 TAILHOOK CLOSE
V6 LEGHOOK OUT
V7 PAWHOLD
LASER LIGHT
V9 PAWCUT L
V8 PAWCUT R
5/8

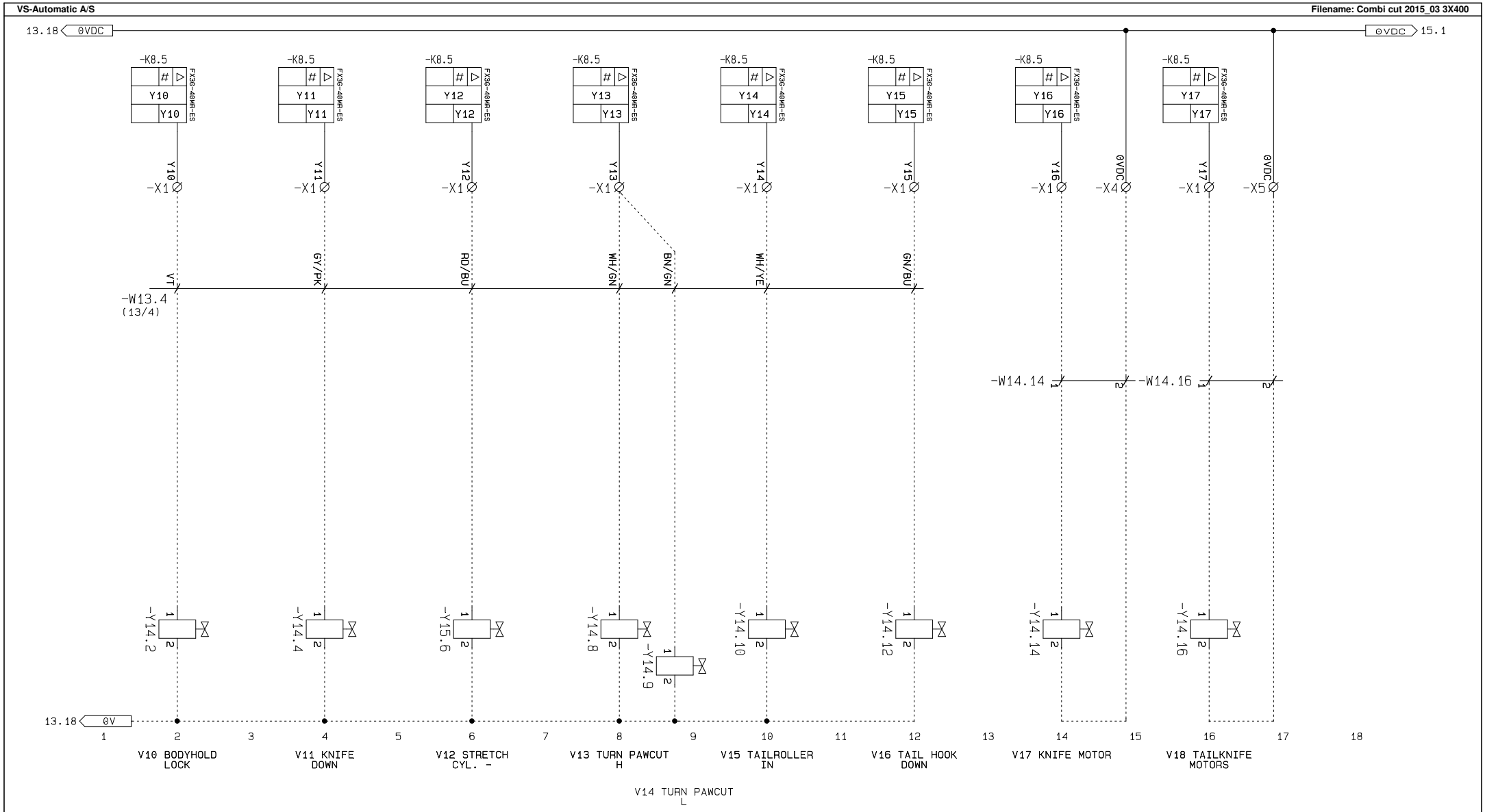
13.18 0VDC
0VDC 15.1
-K8.5
FX3G-40MR-ES
Y10
Y11
Y12
Y13
Y14
Y15
Y16
Y17
-X1
-X4
-X5
0VDC
VT
GY/PK
RD/BU
WH/GN
BN/GN
WH/YE
GN/BU
-W13.4
(13/4)
-W14.14
-W14.16
-Y14.2
-Y14.4
-Y15.6
-Y14.8
-Y14.9
-Y14.10
-Y14.12
-Y14.14
-Y14.16
13.18 0V
V10 BODYHOLD LOCK
V11 KNIFE DOWN
V12 STRETCH CYL. -
V13 TURN PAWCUT H
V14 TURN PAWCUT L
V15 TAILROLLER IN
V16 TAIL HOOK DOWN
V17 KNIFE MOTOR
V18 TAILKNIFE MOTORS

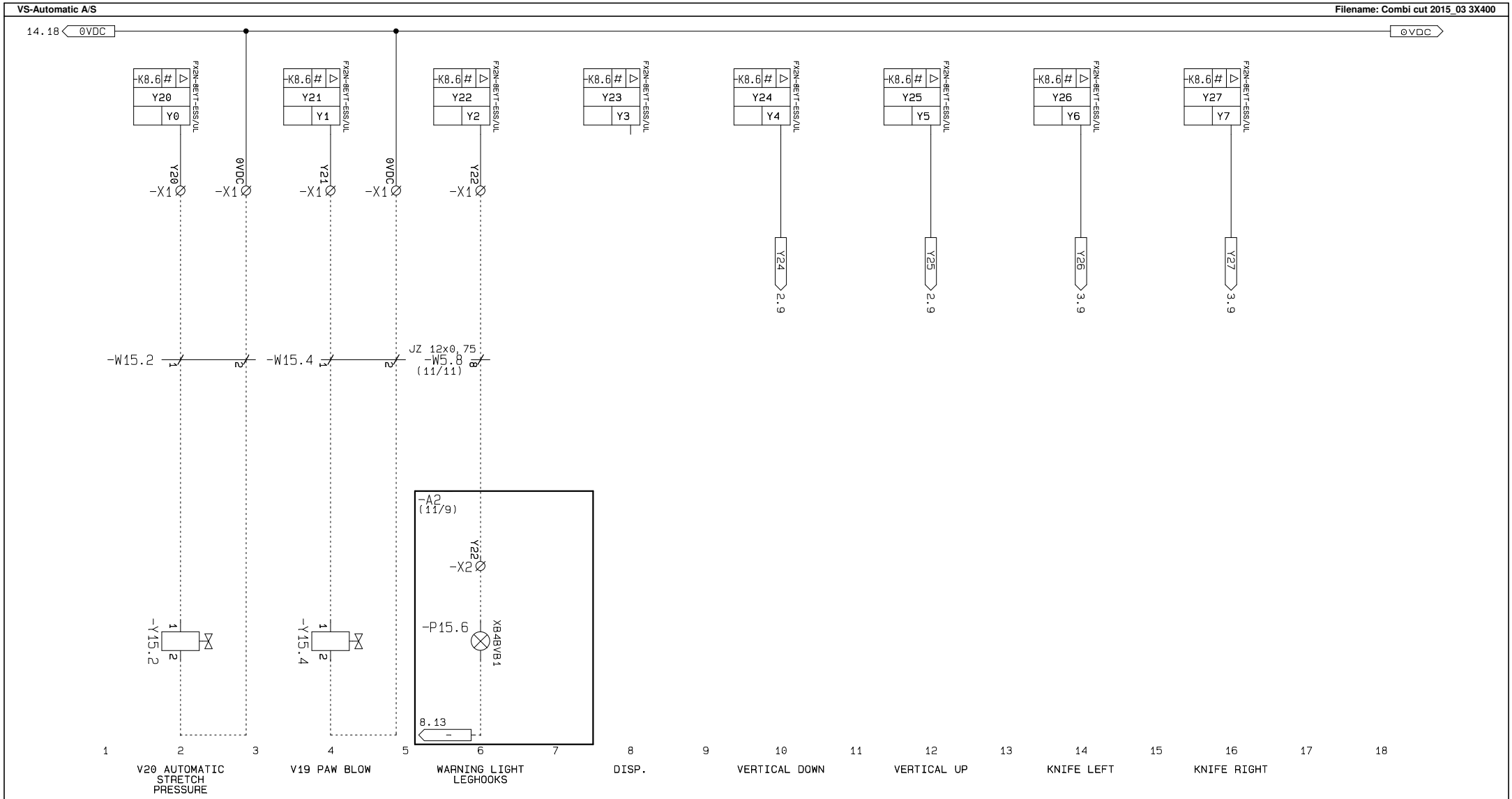
14.18
0VDC
0VDC
-K8.6 # ▷
Y20
Y0
Y21
Y1
Y22
Y2
Y23
Y3
Y24
Y4
Y25
Y5
Y26
Y6
Y27
Y7
FX2N-8EYT-ESS/UL
-X1
Y20
Y21
Y22
Y24
Y25
Y26
Y27
2.9
2.9
3.9
3.9
-W15.2
-W15.4
JZ 12x0,75
-W5.8
(11/11)
-A2
(11/9)
-X2
-P15.6
XB4BVB1
-Y15.2
-Y15.4
8.13
1
2
3
4
5
6
7
8
9
10
11
12
13
14
15
16
17
18
V20 AUTOMATIC STRETCH PRESSURE
V19 PAW BLOW
WARNING LIGHT LEGHOOKS
DISP.
VERTICAL DOWN
VERTICAL UP
KNIFE LEFT
KNIFE RIGHT

Name	I/O	Description	Component
-K8.5:X0	X0	ENCODER VERTICAL CH.A	-X1:X0
-K8.5:X1	X1	ENCODER VERTICAL CH.B	-B9.2:5
-K8.5:X2	X2	EMERGENCY CIRCUIT OK	-U2.2:11
-K8.5:X3	X3	ENCODER KNIFE CH.A	-B9.8:5
-K8.5:X4	X4	ENCODER KNIFE CH.B	-B9.8:3
-K8.5:X5	X5	EMERGENCY SWITCH OK	-K5.6:A1
-K8.5:X6	X6	ENCODER STRETCH CH.A	-B9.14:3
-K8.5:X7	X7	ENCODER STRETCH CH.B	-B9.14:5
-K8.5:X10	X10	LEGHOOKS OUT	-B10.2:BK
-K8.5:X11	X11	VERTICAL REVERSE PUSHBUTTON	-S10.4:14
-K8.5:X12	X12	FOOT SWITCH	-X1:X12
-K8.5:X13	X13	REFERENCE KNIFE	-B10.9:BK
-K8.5:X14	X14	REFERENCE STRETCH	-B10.11:BK
-K8.5:X15	X15	SPADE UP	-B10.12:BK
-K8.5:X16	X16	SPADE DOWN	-B10.14:BK
-K8.5:X17	X17	CROSS KNIFE DOWN	-B10.16:BK
-K8.5:X20	X20	LEGHOOKS IN	-B11.3:BK
-K8.5:X21	X21	TAILHOOK CLOSED	-B11.5:BK
-K8.5:X22	X22	BODYHOLD CLOSED	-B11.7:BK
-K8.5:X23	X23	INVERTERS OK	
-K8.5:X24	X24	STOP BUTTON	-S11.10:14
-K8.5:X25	X25	RESET BUTTON	-S11.12:14
-K8.5:X26	X26	VERTICAL UP	-B11.15:BK
-K8.5:X27	X27	TAILHOOK DOWN	-B11.17:BK
-K8.5:Y0	Y0	RST EMERGENCY CIRCUIT	-K13.2:A1
-K8.5:Y1	Y1	V1 STRETCH CYLINDER PLUS	-Y13.4:1
-K8.5:Y2	Y2	V2 SPADE DOWN	-Y13.6:1
-K8.5:Y3	Y3	LEGHOOKS CLOSE R	-Y13.8:1
-K8.5:Y4	Y4	V6 TAILHOOK CLOSE	-Y13.10:1
-K8.5:Y5	Y5	V6 LEGHOOK OUT	-Y13.12:1
-K8.5:Y6	Y6	V7 PAWHOLD	-B13.15
-K8.5:Y7	Y7	V9 PAWCUT L	-Y13.16:1
-K8.5:Y10	Y10	V10 BODYHOLD LOCK	-Y14.2:1
-K8.5:Y11	Y11	V11 KNIFE DOWN	-Y14.4:1
-K8.5:Y12	Y12	V12 STRETCH CYL. -	-Y15.6:1
-K8.5:Y13	Y13	V13 TURN PAWCUT H	-Y14.9:1
-K8.5:Y14	Y14	V15 TAILROLLER IN	-Y14.10:1
-K8.5:Y15	Y15	V16 TAIL HOOK DOWN	-Y14.12:1
-K8.5:Y16	Y16	V17 KNIFE MOTOR	-Y14.14:1
-K8.5:Y17	Y17	V18 TAILKNIFE MOTORS	-Y14.16:1
-K8.6:Y0	Y20	V20 AUTOMATIC STRETCH PRESSURE	-Y15.2:1
-K8.6:Y1	Y21	V19 PAW BLOW	-Y15.4:1
-K8.6:Y2	Y22	WARNING LIGHT LEGHOOKS	-P15.6:1
-K8.6:Y3	Y23	DISP.	

Name	I/O	Description	Component
-K8.6:Y4	Y24	VERTICAL DOWN	-U2.2:12
-K8.6:Y5	Y25	VERTICAL UP	-U2.2:13
-K8.6:Y6	Y26	KNIFE LEFT	-U3.2:12
-K8.6:Y7	Y27	KNIFE RIGHT	-U3.2:13
-K8.7:IOUT1			-U2.2:10
-K8.7:IOUT2			-U2.2:10
-K8.7:VOUT1	CH1	ANALOG VERT.	-U2.2:2
-K8.7:VOUT2	CH1	ANALOG KNIFE	-U3.2:2

VS-Automatic A/S

FROM		CABLE	TO	
Indication	Page/path	Indication	Indication	Page/path
-S1.2:2	1/1	-W1.1:1	-X3:L1	1/1
-S1.2:4	1/2	-W1.1:2	-X3:L2	1/2
-S1.2:6	1/2	-W1.1:3	-X3:L3	1/2
-S1.2:N	1/2	-W1.1:4	-X3:N	1/2
-S1.2:PE	1/2	-W1.1:PE	-X3:PE	1/2
-X1:L1	1/1	-W1.2:1	-S1.2:1	1/1
-X1:L2	1/2	-W1.2:2	-S1.2:3	1/2
-X1:L3	1/2	-W1.2:3	-S1.2:5	1/2
-X1:N	1/2	-W1.2:4	-S1.2:N	1/2
-X1:PE	1/2	-W1.2:PE	-S1.2:PE	1/2
-U2.2:U	2/2	-W2.2:1	-M2.2:U1	2/2
-U2.2:V	2/2	-W2.2:2	-M2.2:V1	2/2
-U2.2:W	2/2	-W2.2:3	-M2.2:W1	2/2
-U2.2:PE	2/3	-W2.2:S	-M2.2: ⏚	2/3
-U2.2:PE	2/3	-W2.2: ⏚	-M2.2: ⏚	2/3
		-W2.3:1	-M2.2	2/4
		-W2.3:2	-M2.2	2/5
-U3.2:U	3/2	-W3.2:1	-M3.2:U1	3/2
-U3.2:V	3/2	-W3.2:2	-M3.2:V1	3/2
-U3.2:W	3/2	-W3.2:3	-M3.2:W1	3/2
-U3.2:PE	3/3	-W3.2:S	-M3.2: ⏚	3/3
-U3.2:PE	3/3	-W3.2: ⏚	-M3.2: ⏚	3/3
-X1:+	6/3	-W5.8:1	-X2:+	6/3
-X1:1	6/5	-W5.8:2	-X2:1	6/3
-X1:-	6/3	-W5.8:3	-X2:-	6/3
-X1:2	6/5	-W5.8:4	-X2:2	6/3
-X1:X11	10/5	-W5.8:5	-X2:X11	10/5
-X1:X24	11/11	-W5.8:6	-X2:X24	11/11
-X1:X25	11/13	-W5.8:7	-X2:X25	11/13
-X1:Y22	15/6	-W5.8:8	-X2:Y22	15/6
-X1:5	5/12	-W5.12:1	-K5.12:1	5/12
-K5.12:2	5/12	-W5.12:2	-X1:-	5/12
-X1:1	6/5	-W6.7:1	-K6.7:12	6/8
-X1:3	6/8	-W6.7:2	-K6.7:11	6/8
-X1:2	6/5	-W6.7:3	-K6.7:22	6/8
-X1:4	6/8	-W6.7:4	-K6.7:21	6/8

FROM		CABLE	TO	
Indication	Page/path	Indication	Indication	Page/path
-D5.14:ETHERNET	8/14	-W8.10		
-B9.2:2	9/2	-W9.2:BN	-X1:24VDC	9/2
-B9.2:3	9/3	-W9.2:GN	-X1:X0	9/3
-B9.2:5	9/4	-W9.2:GY	-X1:X1	9/5
-B9.2:1	9/3	-W9.2:WH	-X1:0VDC	9/3
-B9.8:2	9/8	-W9.8:BN	-X1:24VDC	9/8
-B9.8:3	9/9	-W9.8:GN	-X1:X4	9/11
-B9.8:5	9/10	-W9.8:GY	-X1:X3	9/9
-B9.8:1	9/9	-W9.8:WH	-X1:0VDC	9/9
-B9.14:2	9/14	-W9.14:BN	-X1:24VDC	9/14
-B9.14:3	9/15	-W9.14:GN	-X1:X6	9/15
-B9.14:5	9/16	-W9.14:GY	-X1:X7	9/17
-B9.14:1	9/15	-W9.14:WH	-X1:0VDC	9/15
-X1:X10	10/3	-W10.2:BK	-B10.2:BK	10/3
-X1:24VDC	10/2	-W10.2:BN	-B10.2:BN	10/2
-X1:0VDC	10/3	-W10.2:BU	-B10.2:BU	10/3
-S10.6:1	10/7	-W10.6:1	-X1:24VDC	10/6
-S10.6:2	10/7	-W10.6:2	-X1:X12	10/7
-X1:X13	10/9	-W10.8:BK	-B10.9:BK	10/9
-X1:24VDC	10/8	-W10.8:BN	-B10.9:BN	10/8
-X1:0VDC	10/9	-W10.8:BU	-B10.9:BU	10/9
-X1:X14	10/11	-W10.10:BK	-B10.11:BK	10/11
-X1:24VDC	10/10	-W10.10:BN	-B10.11:BN	10/10
-X1:0VDC	10/11	-W10.10:BU	-B10.11:BU	10/11
-X1:X15	10/13	-W10.12:BK	-B10.12:BK	10/13
-X1:24VDC	10/12	-W10.12:BN	-B10.12:BN	10/12
-X1:0VDC	10/13	-W10.12:BU	-B10.12:BU	10/13
-X1:X16	10/15	-W10.14:BK	-B10.14:BK	10/15
-X1:24VDC	10/14	-W10.14:BN	-B10.14:BN	10/14
-X1:0VDC	10/15	-W10.14:BU	-B10.14:BU	10/15
-X1:X17	10/17	-W10.16:BK	-B10.16:BK	10/17
-X1:24VDC	10/16	-W10.16:BN	-B10.16:BN	10/16
-X1:0VDC	10/17	-W10.16:BU	-B10.16:BU	10/17

FROM		CABLE	TO	
Indication	Page/path	Indication	Indication	Page/path
-X1:X20	11/3	-W11.2:BK	-B11.3:BK	11/3
-X1:24VDC	11/2	-W11.2:BN	-B11.3:BN	11/2
-X1:0VDC	11/3	-W11.2:BU	-B11.3:BU	11/3
-X1:X21	11/5	-W11.4:BK	-B11.5:BK	11/5
-X1:24VDC	11/4	-W11.4:BN	-B11.5:BN	11/4
-X1:0VDC	11/5	-W11.4:BU	-B11.5:BU	11/5
-X1:X22	11/7	-W11.6:BK	-B11.7:BK	11/7
-X1:24VDC	11/6	-W11.6:BN	-B11.7:BN	11/6
-X1:0VDC	11/7	-W11.6:BU	-B11.7:BU	11/7
-X1:X26	11/15	-W11.14:BK	-B11.15:BK	11/15
-X1:24VDC	11/14	-W11.14:BN	-B11.15:BN	11/14
-X1:0VDC	11/15	-W11.14:BU	-B11.15:BU	11/15
-X1:X27	11/17	-W11.16:BK	-B11.17:BK	11/17
-X1:24VDC	11/16	-W11.16:BN	-B11.17:BN	11/16
-X1:0VDC	11/17	-W11.16:BU	-B11.17:BU	11/17
-X1:Y7	13/16	-W13.4:BK	-Y13.16:1	13/16
-X1:Y2	13/6	-W13.4:BN	-Y13.6:1	13/6
-X1:Y13	14/8	-W13.4:BN/GN	-Y14.9:1	14/9
-X1:Y6	13/14	-W13.4:BU	-Y13.14:1	13/14
-X1:Y3	13/8	-W13.4:GN	-Y13.8:1	13/8
-X1:Y15	14/12	-W13.4:GN/BU	-Y14.12:1	14/12
-X1:Y4	13/10	-W13.4:GY	-Y13.10:1	13/10
-X1:Y11	14/4	-W13.4:GY/PK	-Y14.4:1	14/4
-X1:Y5	13/12	-W13.4:PK	-Y13.12:1	13/12
-X1:Y7	13/16	-W13.4:RD	-Y13.17:1	13/17
-X1:0VDC	13/5	-W13.4:RD/BK+YE/BK	-Y13.10:2	13/10
-X1:Y12	14/6	-W13.4:RD/BU	-Y15.6:1	14/6
-X1:Y10	14/2	-W13.4:VT	-Y14.2:1	14/2
-X1:Y1	13/4	-W13.4:WH	-Y13.4:1	13/4
-X1:Y13	14/8	-W13.4:WH/GN	-Y14.8:1	14/8
-X1:Y14	14/10	-W13.4:WH/YE	-Y14.10:1	14/10
-X1:Y3	13/8	-W13.4:YE	-Y13.9:1	13/9
-X1:0VDC	13/15	-W13.15:BK	-B13.15	13/15
-X1:Y6	13/14	-W13.15:RD	-B13.15	13/15
-X1:Y16	14/14	-W14.14:1	-Y14.14:1	14/14
-X4:0VDC	14/15	-W14.14:2	-Y14.14:2	14/14

VS-Automatic A/S

FROM		CABLE	TO	
Indication	Page/path	Indication	Indication	Page/path
-X1:Y17	14/16	-W14.16:1	-Y14.16:1	14/16
-X5:0VDC	14/17	-W14.16:2	-Y14.16:2	14/16
-X1:Y20	15/2	-W15.2:1	-Y15.2:1	15/2
-X1:0VDC	15/3	-W15.2:2	-Y15.2:2	15/2
-X1:Y21	15/4	-W15.4:1	-Y15.4:1	15/4
-X1:0VDC	15/5	-W15.4:2	-Y15.4:2	15/4