IMPROVING YOUR FUR BUSINESS

Spareparts

HG QUICK CUT

16-10-2017

Model 2011 – 2016

1. Tabel of content.

1. Table for content
2. Spareparts.
3. Air diagrams
4. Electric diagrams

Parts List

ITEM	QTY	PART NUMBER	DESCRIPTION
1	4	10204012	Bolt.unbraco cyl 4x12 FZB
2	4	10205012	Bolt unbrako cyl 5x12 FZB
3	23	10206016	Bolt. unbraco cyl 6x16 FZB
4	6	10208025	Bolt Unbrako Cyl. 8x25 FZB
5	5	17906000	Self-locking nut M6 FZB
6	4	17908000	Self-locking nut M8 FZB
7	1	19767	HG Logo - big 205x108mm
8	1	207808	Laser light set for CC & QC
9	1	207858	Left screen for horisontial belt
10	1	207859	Right screen for horisontial belt
11	1	207997	Left cover for Quick Cut
12	1	207998	Right cover for Quick Cut
13	1	30043	Id plate Quick Cut 2011
14	1	30545	Bracket for sensor, pawstretch
15	1	30555	Sensor bracket for crosscut knife
16	1	30788	Lid for cover
17	1	30838	Electric assembly 1
18	1	30839	Quick Cut 2011 electric assembly 2
19	1	30842	Electric box mount on machine
20	1	30897	Quick cut 2011 assembly 2
21	1	31006	Warning sign High woltage
22	1	31010	Warning sign, Ear protec.
23	0,5 l	476560	Oil VG 5 Q8 Dynebear 5
24	1	600005	Foot pedal with emergency stop
25	3 m	600526	Cable JZ 3x2,5mm2
26	2,5 m	600528	Cable OZ 4x0,75mm2
27	3,0 m	600595	Spiral pipe SPS25
28	1,5 m	600600	Spiral pipe SPS35
29	2,5 m	600635	Cable JZ 3G0,75mm2
30	2,5 m	600645	Cable CY-JZ TR. 4G1,0mm2
31	2	600660	Sensor inductive M8 PNP No 2,5mm
32	3 m	601010	Cable JZ 18G 0,75
33	2	7003208	Pop rivet ß3.2x8mm
34	4	82104000	Washer M4 FZB
35	4	82105900	Washer M5 FZB
36	28	82106000	Washer M6 FZB
37	10	82108000	Washer M8 FZB

F (0,36 : 1)

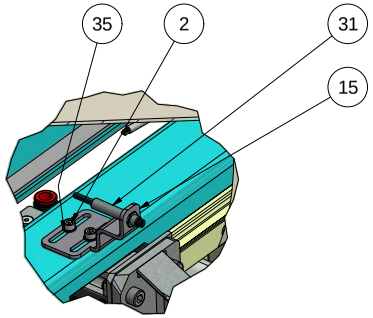

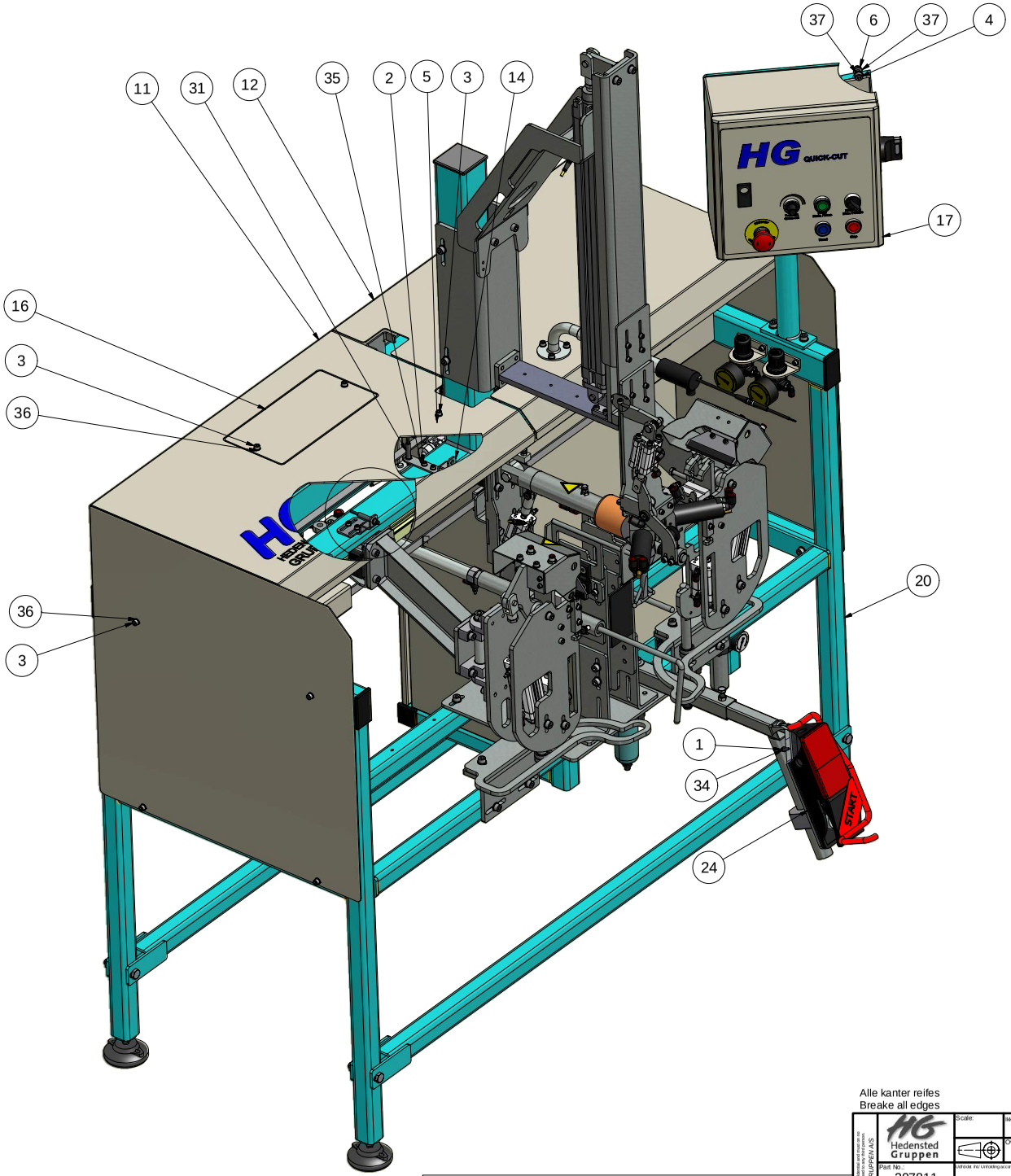

Alle kanter reifes
Breake all edges

REVISION HISTORY			
REV	DESCRIPTION	DATE	APPROVED
A	New drawing	10-01-2011	KL
B	Part list updated	18-01-2013	MRH
C	Screws for covers changed	29-10-2013	LL

Hedensted Gruppen

Scale:

Ikke angivet tolerancer iht. / Not specified tolerance according to: DS/ISO 2768-m

Overfl. beskaffenhed/Surface properties:

Konst./Designed:

Tegnet/Drafted:

Part No.: 207811

Material:

Date: 29-03-2006

Description: HG Quick Cut 2011

Description:

Sidst gemt af/Last saved by:

Sidst gemt/Last saved: 10-01-2011

Sheet size: A2

Sheet 1 / 2

This document is strictly confidential and cannot on its own be used for any purpose. © COPYRIGHT HEDENSTED GRUPPEN A/S

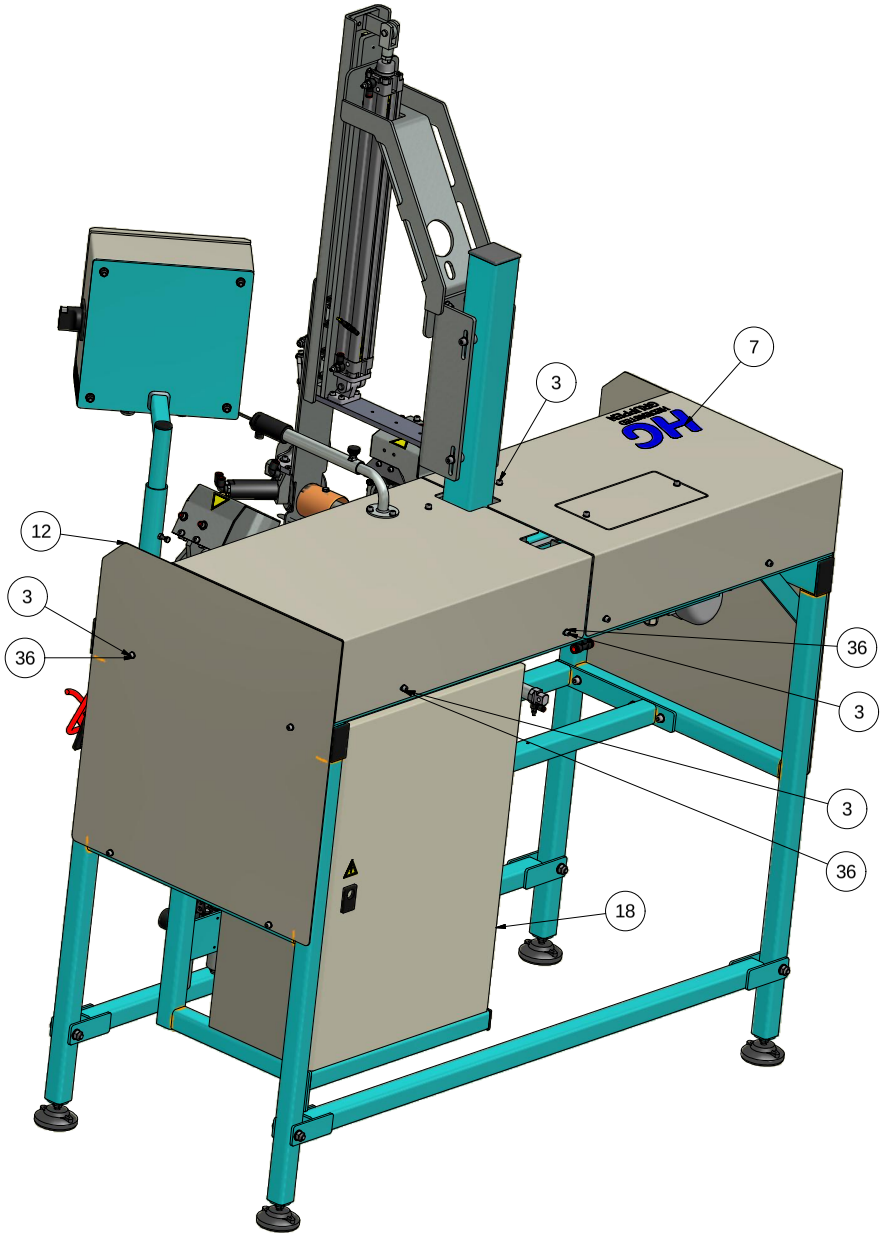

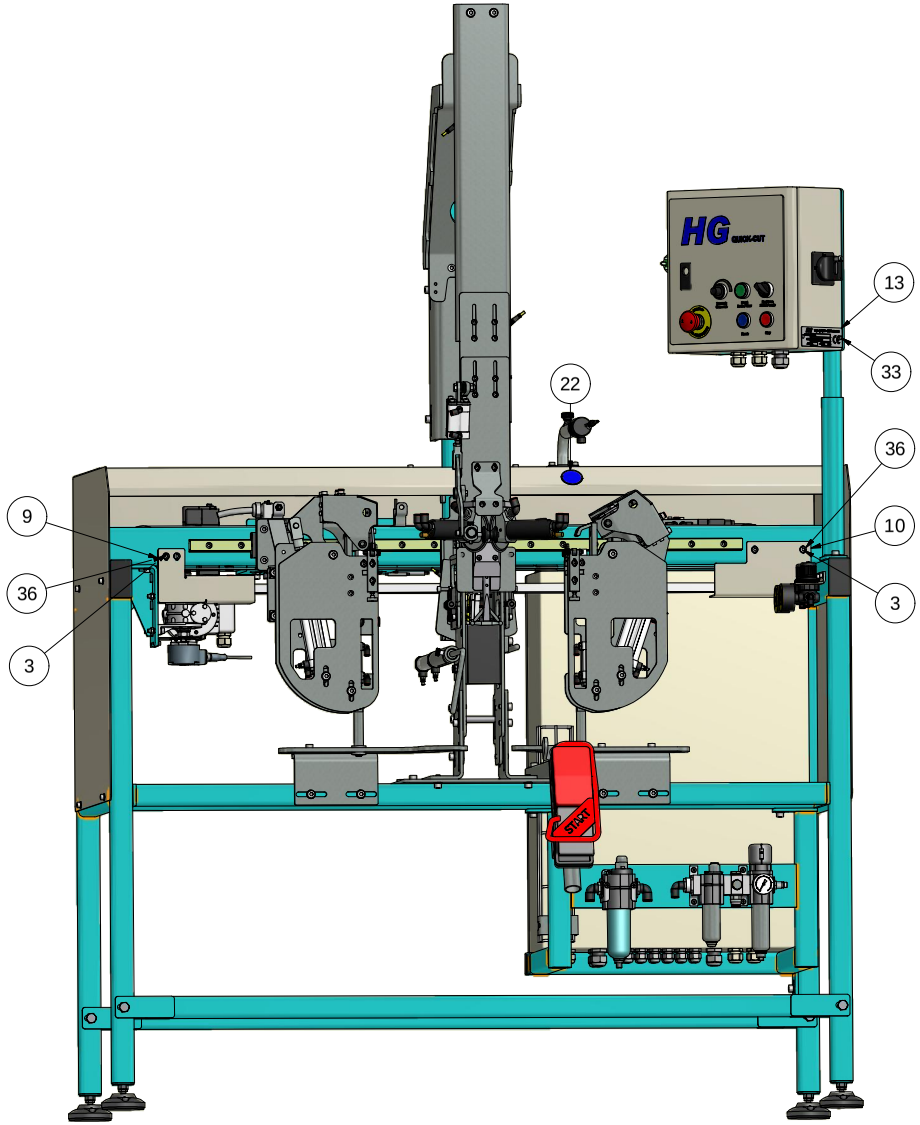

Alle kanter reifes
Breake all edges

Hedensted Gruppen	Scale:	Ikke angivet toleranceint. / Not specified tolerance according to: DS/ISO 2768-m	Konst./Designed:
		Overfl. beskaffenhed/Surface properties:	Tegnet/Drafted:
Part No.: 207811	Udfoldet fra/Unfolding according to:	Material:	Date: 29-03-2006
Description: HG Quick Cut 2011			
Description:			
Sidst gemt af/Last saved by:	Sidst gemt/Last saved: 10-01-2011	Sheet size: A2	Sheet 2 / 2

This document is strictly confidential and cannot on its own be used for any purpose. © COPYRIGHT HEDENSTED GRUPPEN A/S

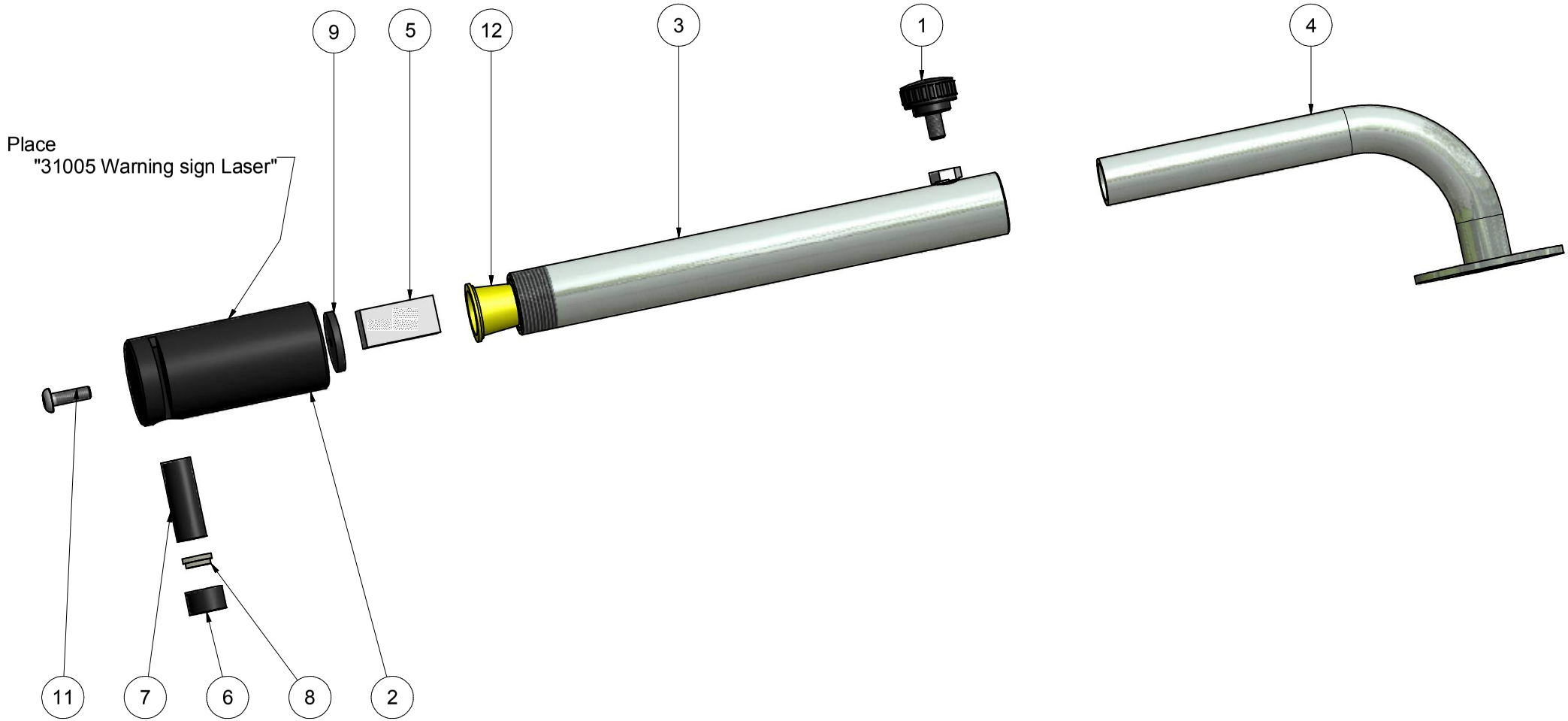

Parts List			
ITEM	QTY	PART NUMBER	DESCRIPTION
1	1	206681	Finger screw B193-20 P M6x10
2	1	207831	Housing for laser mondule
3	1	207833	Outer pipe for laser
4	1	207837	Inner pipe for laser
5	1	207839	Voltage regulator 24V-3CDC
6	1	207963	Housing for lens
7	1	207964	Laser mondule RLLH635-4-3
8	1	207965	Lens for laser
9	1	30906	Rubber washer for print
10	1	31005	Warning sign Laser
11	1	76005016	Bolt buttonhead 5x15 FZB
12	1	M10382	Conical plug 16mm

Break all edges

Alle kanter reifes

REV	DESCRIPTION	DATE	APPROVED
D	16mm plastic plug added	29-10-2012	KL
C	Renamed	20-05-2010	KC
B	Lenz added	08-07-2008	KL
A	Made	08-07-2008	KC

REVISION HISTORY

This document is strictly confidential and must on no account be copied or disclosed to any third person.
HEDENSTED GRUPPEN A/S

Hedensted Gruppen

Scale:

Ikke angivet tolerancer iht./ Not specified tolerance according to: DS/ISO 2768-m

Overfl. beskaffenhed/Surface properties:

Konst./Designed:

Tegnet/Drafted:

Part No.: 207808

Udfoldet iht./ Unfolding according to:

Material:

Date: 08-07-2008

Beskrivelse: Laser light set for CC & QC

Description:

Sidst gemt af/Last saved by: KC

Sidst gemt/Last saved: 08-07-2008

Sheet size: A3

Sheet 1 / 1

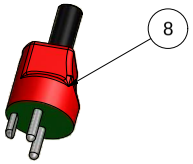

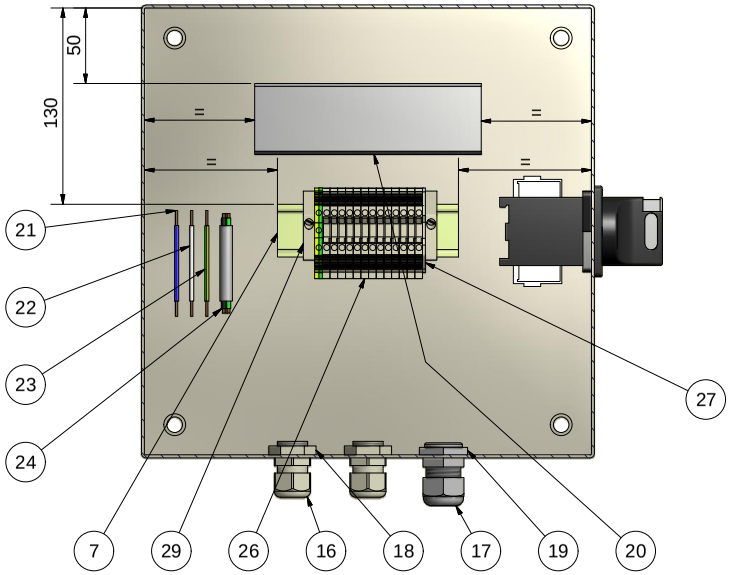

Parts List			
ITEM	QTY	PART NUMBER	DESCRIPTION
1	1	201107	Potentiometer 10K ohm ß6 shaft
2	1	30830	Label for Quick-Cut
3	1	30841	Electric mounting Quick C.2011
4	0,25 m	475910	Flex hose 15mm SPS 15
5	1	600075	Switch element No ZBE-101
6	1	600100	Emergencystop button ZB4BS844
7	0,12 m	600155	DIN rail
8	1	600252	Plug S-6 red/green
9	1	600300	Box metal 300x300x150
10	1	600330	Turn switch XB4BD21
11	1	600340	Push-button XB4BA61 Blue
12	1	600345	Push-button XB4BA42 Red 1NC
13	1	600350	Button w/light XB4BW33B5 green
14	1	600358	Safety switch 20A Kpl Black
15	1	600375	Contact block ZB4BZ104 2NC
16	2	600455	Cabel gland M20 Ï 5-12
17	1	600465	Cable gland M25
18	2	600475	Nut M20 polyamid
19	1	600480	Nut M25 polyamid
20	0,15 m	600485	Cable duct 85x47
21	7,0 m	600490	Cord HO5V2K 1x0,75 d. blue PVT
22	1,5 m	600495	Cord HO5V2K 1x0,75 White PVT
23	0,5 m	600510	Cord HO7V2K 1x1,5 G/G PVT
24	2,50 m	600526	Cable JZ 3x2,5mm2
25	40	600530	Pin/Iso H0,75/14 902123 P500
26	13	600550	Terminal block WDU_2,5
27	1	600555	End plate WAP 2,5-10
28	1	600585	Earthing terminal WPE 2,5
29	2	600590	End bracket EW 35
30	5	600632	Cable shoe 1,5-2,5 Ï 6
31	1	600655	Handle ZB4BD912 Ï 6
32	40	600685	Panduit Label for Laser
33	1	600812	Label sheet 5-0 47339 blue
34	1	600814	Label sheet 0-5 47339 red
35	2	600940	Label sheet 5-FWZ 52306 1-10A
36	1	600982	Label sheet 5- L1L2L3+N+PE
37	1	600990	Label sheet 5MM X
38	5	601075	Pin/iso H1,50 on strip Black

A-A (1 : 2,5)

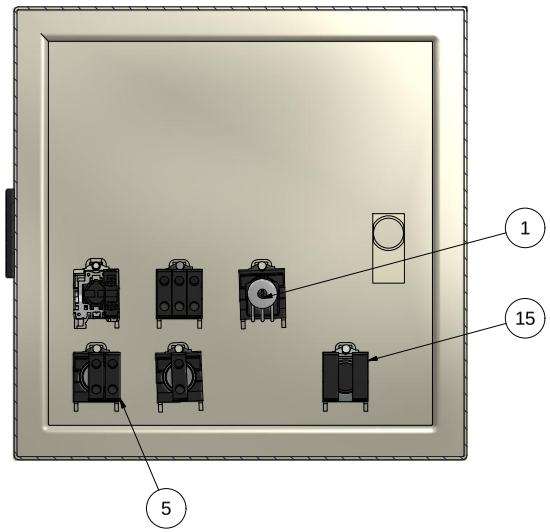

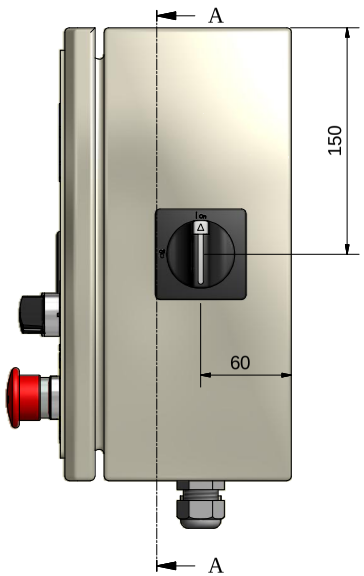

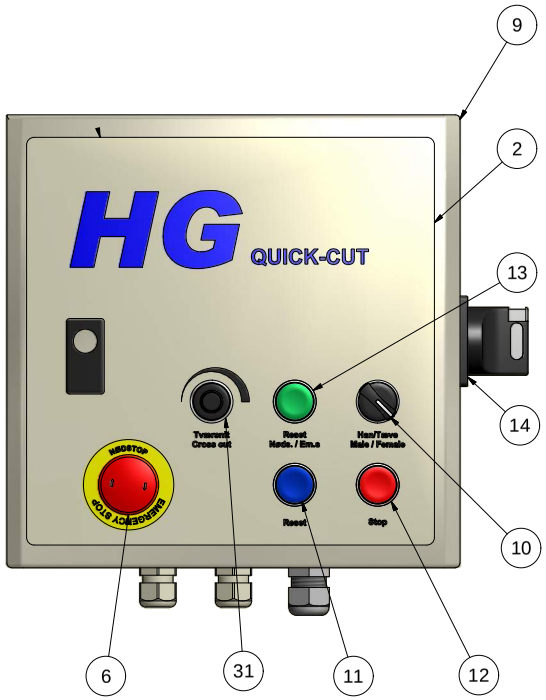

REVISION HISTORY			
REV	DESCRIPTION	DATE	APPROVED
B	Wires and Ferrules added	22-01-2013	MRH
C	600075 added	26-02-2013	KL
C	Pot.meter changed 600315 til 201107	20-02-2014	KL

Alle kanter reifes
Breake all edges

This drawing is the property of HEDENSTED GRUPPEN A/S. Reproduction or disclosure to third parties without written consent is prohibited.	Hedensted Gruppen	Scale: 1 : 2,5	Alle angivet tolerancer iht./Not specified tolerance according to:	Sheet size: A2
			Overfl. beklædning/Surface properties:	Sheet: 1 /1
	Part No.: 30838	Material:		
	Description: Electric assembly 1			
	Description: Quick cut 2011			

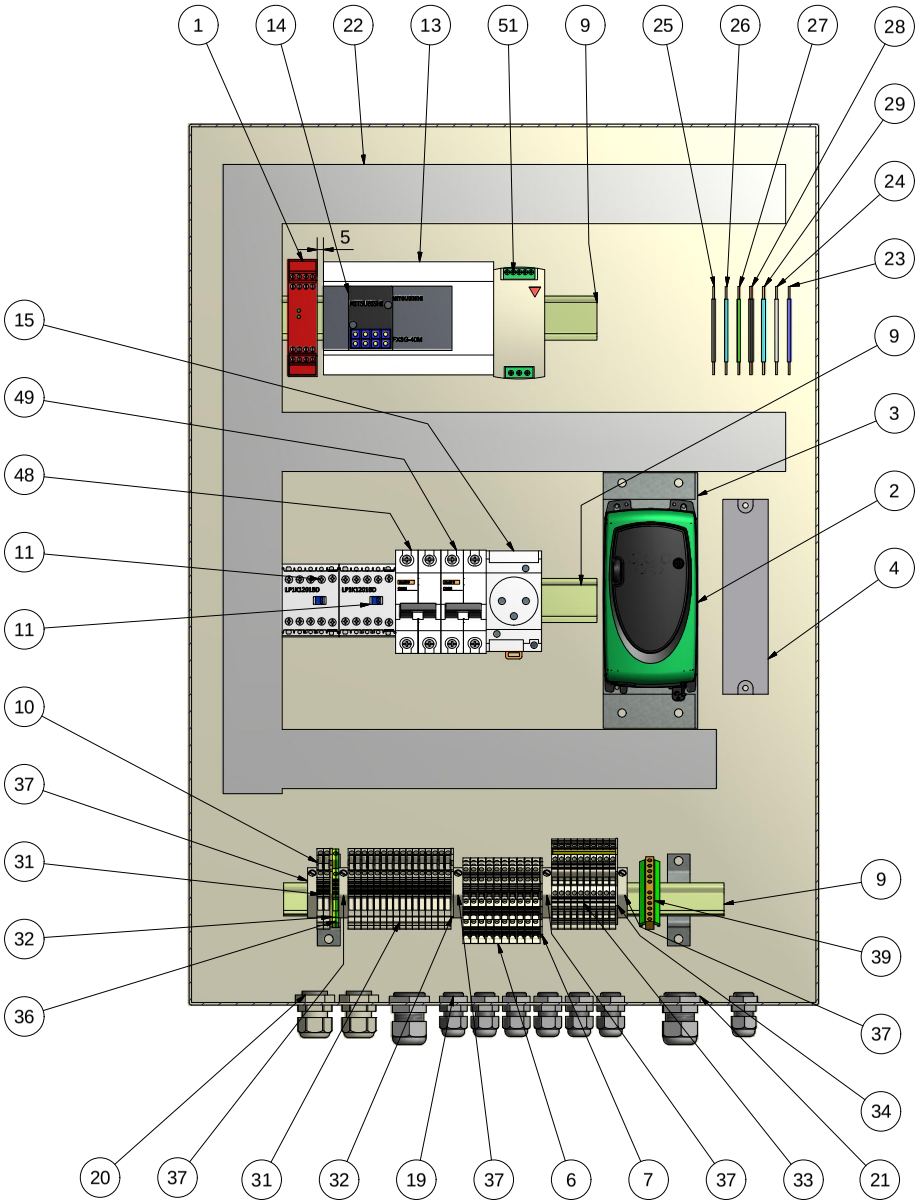

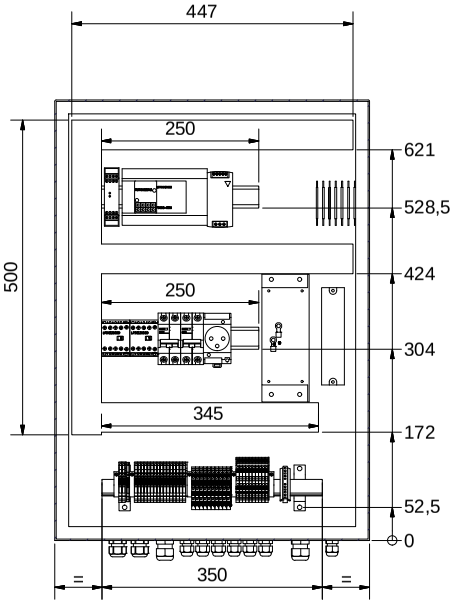

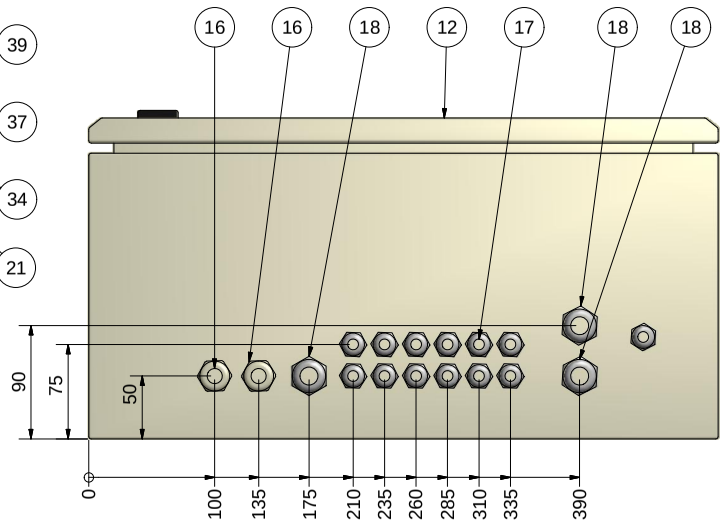

Parts List

ITEM	QTY	PART NUMBER	DESCRIPTION
1	1	206731	Secur. modulel 24VAC/DC Cat3
2	1	207960	Freq converter SKA0,37kW
3	1	207961	Low Leak filter for SKA
4	1	207980	Break resistance for SKA
5	1	30108	Mounting electric Quick Cut
6	10	600112	Terminal block DLD 2.5/35
7	1	600125	End plate AP-DLD nr 131766
8	2	600130	Cross connector Q10 no131310
9	0,85 m	600155	DIN rail
10	2	600156	Bracket 45deg for Din rail
11	2	600288	Contact.LP1K1201BD 24VDC
12	1	600305	Box metal 700x500x250
13	1	600313	PLC FX3G-40MR-ES
14	1	600411	Pot.mondul .FX3G-8AV-BD
15	1	600420	Socket PC16/2 2P 16A DK M/J
16	2	600455	Cabel gland M20 Ï 5-12
17	13	600460	Cable gland M16
18	3	600465	Cable gland M25
19	13	600470	Nut M16 polyamid
20	2	600475	Nut M20 polyamid
21	3	600480	Nut M25 polyamid
22	1,70 m	600485	Cable duct 85x47
23	50,0 m	600490	Cord HO5V2K 1x0,75 d. blue PVT
24	5,0 m	600495	Cord HO5V2K 1x0,75 White PVT
25	2,0 m	600500	Cord H07Z-K 1x1,5 Black PVT
26	2,0 m	600505	Cord HO7V2K 1x1,5 L.Blue PVT
27	5,00 m	600510	Cord HO7V2K 1x1,5 G/G PVT
28	5,00 m	600515	Cord HO7V2K 1x2,5 Black PVT
29	5,00 m	600520	Cord HO7V2K 1x2,5 L.Blue. PVT
30	130	600530	Pin/Iso H0,75/14 902123 P500
31	18	600550	Terminal block WDU_2,5
32	2	600555	End plate WAP 2,5-10
33	10	600560	Terminal block WDK 2,5
34	1	600565	End plate WAP DK 2,5
35	2	600580	Cross connector WQV 2,5/10 10P
36	1	600585	Earthing terminal WPE 2,5
37	5	600590	End bracket EW 35
38	2	600632	Cable shoe 1,5-2,5 Ï 6
39	1	600665	Earthing terminal 11 Pol
40	200	600685	Panduit Label for Laser
41	3	600812	Label sheet 5-0 47339 blue
42	2	600814	Label sheet 0-5 47339 red
43	3	600940	Label sheet 5-FWZ 52306 1-10A
44	1	600945	Label sheet 11-20 5-FWZ 52306
45	1	600982	Label sheet 5- L1L2L3+N+PE
46	2	600990	Label sheet 5MM X
47	1	600992	Label sheet 5MM Y
48	1	601035	Auto. fuse 16A C 1P+N
49	1	601040	Auto. fuse 6A C 1P+N
50	40	601075	Pin/iso H1,50 on strip Black
51	1	601275	Power supply SPD24061

REVISION HISTORY

REV	DESCRIPTION	DATE	APPROVED
G	Pins changed 601060 to600530	02-06-2015	MRH
F	1 M16 Cable Gland added	03-04-2014	MAC
E	Q10 connector added	20-01-2011	KL
D	M16 Cable glands added	29-10-2013	LL
C	Wires, labels and ferrules added	22-01-2013	MRH
B	2x WDU 2,5 added	07-06-2012	KL
A	New drawing	20-01-2011	KL

Alle kanter reifes
Breake all edges

Hedensted Gruppen

Scale:

Ikke angivet tolerancer iht. / Not specified tolerance according to: DS/ISO 2768-m

Overfl. beskaffenhed/Surface properties:

Konst./Designed:

Tegnet/Drafted: KL

Part No.: 30839

Material:

Date: 19-01-2011

Description: Quick Cut 2011 electric assembly 2

Description:

Sidst gemt af/Last saved by:

Sidst gemt/Last saved: 20-01-2011

Sheet size: A2

Sheet 1 / 1

This document is strictly confidential and must not be copied or disclosed to third parties without written consent of HEDENSTED GRUPPEN A/S

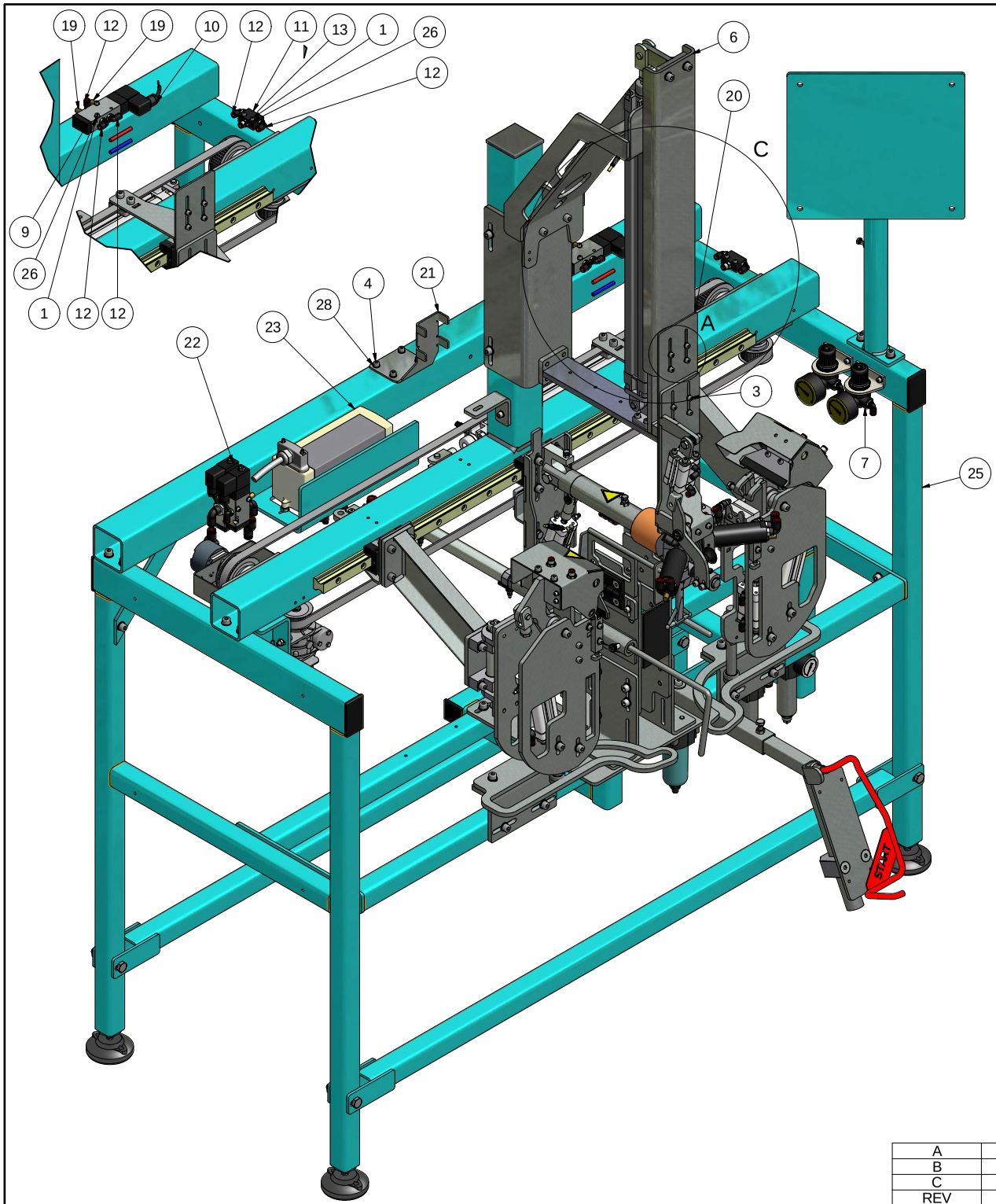

PARTS LIST			
ITEM	QTY	PART NUMBER	DESCRIPTION
1	4	10204030	Bolt.unbraco cyl 4x30 FZB
2	4	10205010	Bolt.unbraco cyl.5x10 FZB
3	8	10205025	Bolt unbrako cyl 5x25 FZB
4	4	10206020	Bolt unbraco cyl 6x20 FZB
5	4	20404010	Hexagon countersunk 4x10 FZB
6	1	207883	Frame for spade lift QC2011
7	2	207995	Regulator for stretch - assembly
8	1	210188	Filter regulator unit
9	1	215042	G 1/8 Magnetvalve 5/2. 24 V
10	1	215184	Socket 22mm with 3m wire
11	1	215405	Shutter valve G1/8
12	5	215760	Swirvel elbow Ï 6mm 1/8"
13	1	215925	Straight connector Ï 6 mm G1/8"
14	17 m	216104	Air hose Ï 4mm pur red
15	11 m	216106	Air hose Ï 4mm pur blue
16	31,50 m	216116	Air hose Ï 6mm pur red
17	17,80 m	216118	Air hose Ï 6mm Pur blue
18	3 m	216126	Air hose Ï 10mm pur white
19	2	216796	Silencer 1/8" T40C-1800
20	1	30428	Assembly tailroll system QC
21	1	30823	Bracket for hose support
22	1	30836	Valve assembly for Quick cut
23	1	30894	VM10 assambly
24	1	30895	Fin filter assembly
25	1	30896	Quick cut 2011 assembly 1
26	4	82104000	Washer M4 FZB
27	12	82105900	Washer M5 FZB
28	4	82106000	Washer M6 FZB

B (1: 5)

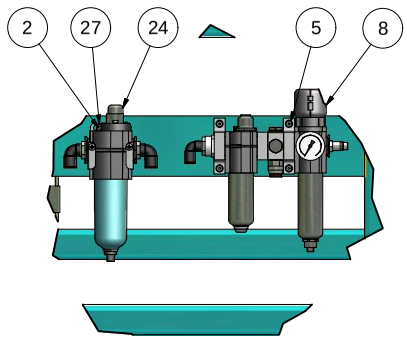

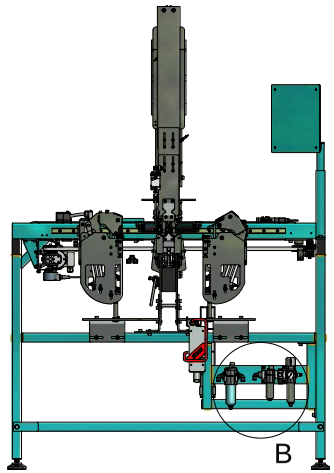

Alle kanter reifes
Breake all edges

REV	DESCRIPTION	DATE	APPROVED
A	Made	18-01-2013	MRH
B	Parts added	03-04-2014	MAC
C	30426 changed to 30428	10-06-2014	KL

REVISION HISTORY

Ville ikke anvendes til andet end angivet formål uden skriftlig tilladelse af HEDENSTED GRUPPEN A/S

HEDENSTED GRUPPEN A/S

Hedensted Gruppen

Scale: 1: 5	Alle angivet tolerancer iht./Not specified tolerance according to: DS/ISO 2768-m	Sheet size: A2
	Overfl. beskaffenhed/Surface properties: No	Sheet: 1 /1
Part No.: 30897	Material:	

Description: Quick cut 2011 assembly 2

Description:

Parts List			
ITEM	QTY	PART NUMBER	DESCRIPTION
1	12	10204020	Bolt.unbraco cyl 4x20 FZB
2	4	10206016	Bolt. unbraco cyl 6x16 FZB
3	4	10206020	Bolt unbraco cyl 6x20 FZB
4	6	10208020	Bolt.unbraco cyl 8x20 FZB
5	2	10208030	Bolt Unbrako cyl. 8x30 FZB
6	4	10208035	Bolt Unbrako cyl 8x35 FZB
7	2	17908000	Self-locking nut M8 FZB
8	2	20406025	Hexagon countersunk 6x25 FZB
9	4	20408016	Hexagon countersunk 8x16 FZB
10	4	207872	Spacer for connetion plade
11	1	207877	Connection plate for frame
12	1	207880	Reinforcement for tower model ES
13	1	207887	Horisontial console for tower_M2008
14	1	207890	Connectionplate-spade cylinder_ES
15	1	207895	Horisontial console model ES
16	1	212129	Cylinder PRA/182040/M/500
17	1	214120	F-Joint QM-8040-25
18	1	214160	L-Joint QA-8040-24
19	2	214312	Reed induktiv sensor (yellow)
20	2	214314	Socket with 3M wire 3p/M8
21	2	215992	Banjo flow control Ï 6 1/4"
22	2	222315	Ball runner block size 15
23	1	222337	Ball guide rail size 15-700mm
24	1	30291	Bracket assembly for tower lift
25	12	82108000	Washer M8 FZB

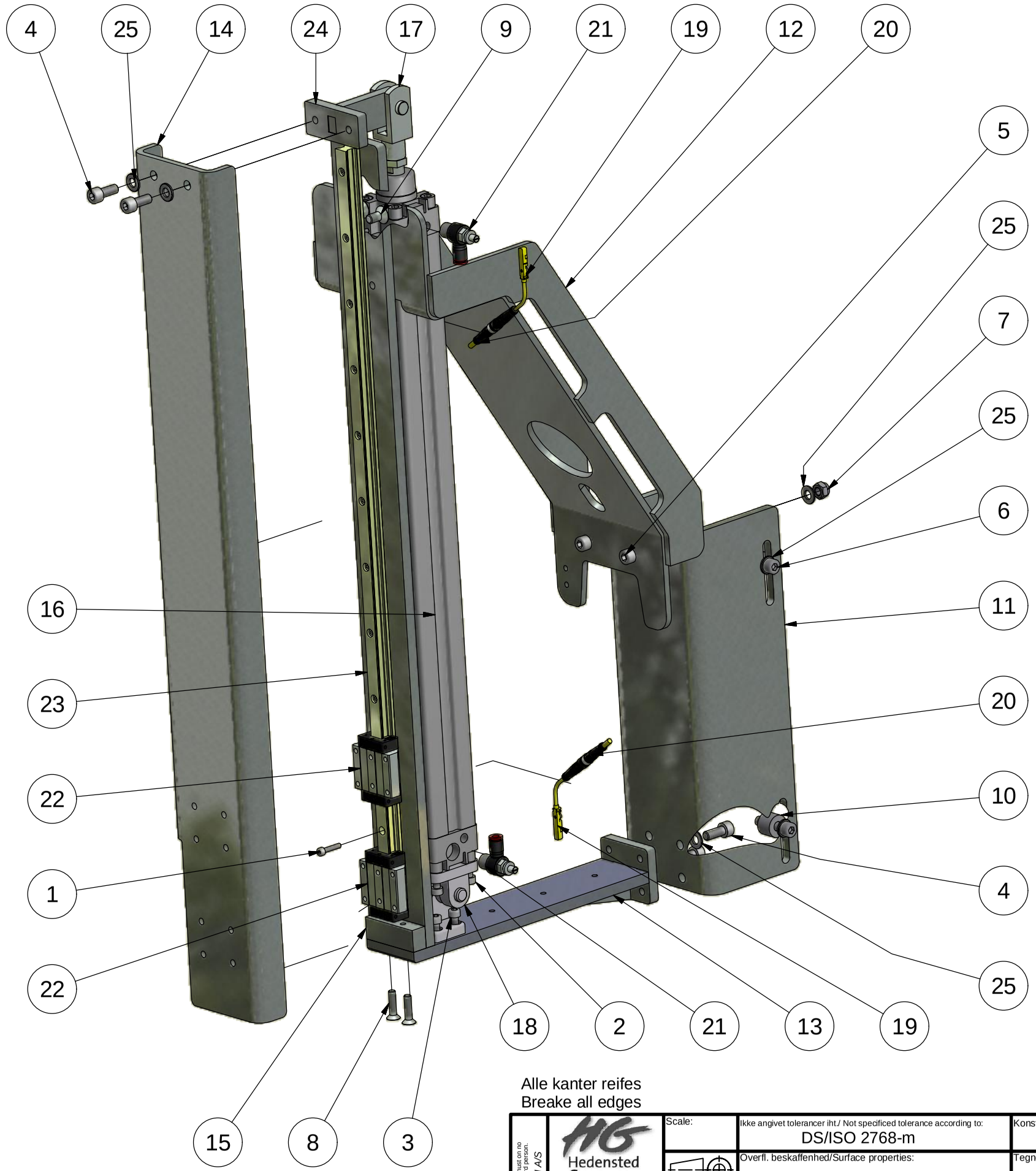

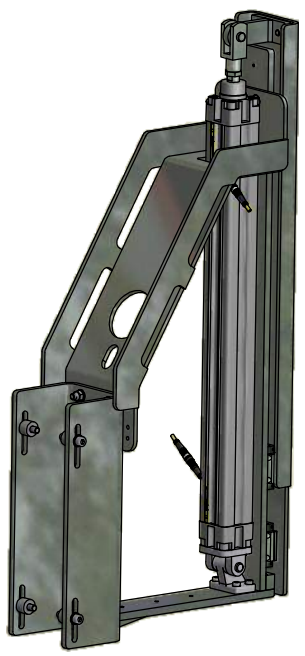

Alle kanter reifes
Breake all edges

REVISION HISTORY			
REV	DESCRIPTION	DATE	APPROVED
A	new drawing	11-01-2011	KL
B	Changed to steel guide rail	11-03-2012	KL

This document is strictly confidential and must on no account be copied or disclosed to any third person.
HEDENSTED GRUPPEN A/S

Hedensted Gruppen

Scale:

Ikke angivet tolerancer iht./ Not specificed tolerance according to: DS/ISO 2768-m

Konst./Designed:

Overfl. beskaffenhed/Surface properties:

Tegnet/Drafted:

Part No.: 207883

Udfoldet iht./ Unfolding according to:

Material:

Date: 17-12-2010

Description: Frame for spade lift QC2011

Description:

Sidst gemt af/Last saved by:

Sidst gemt/Last saved: 11-01-2011

Sheet size: A3

Sheet 1 / 2

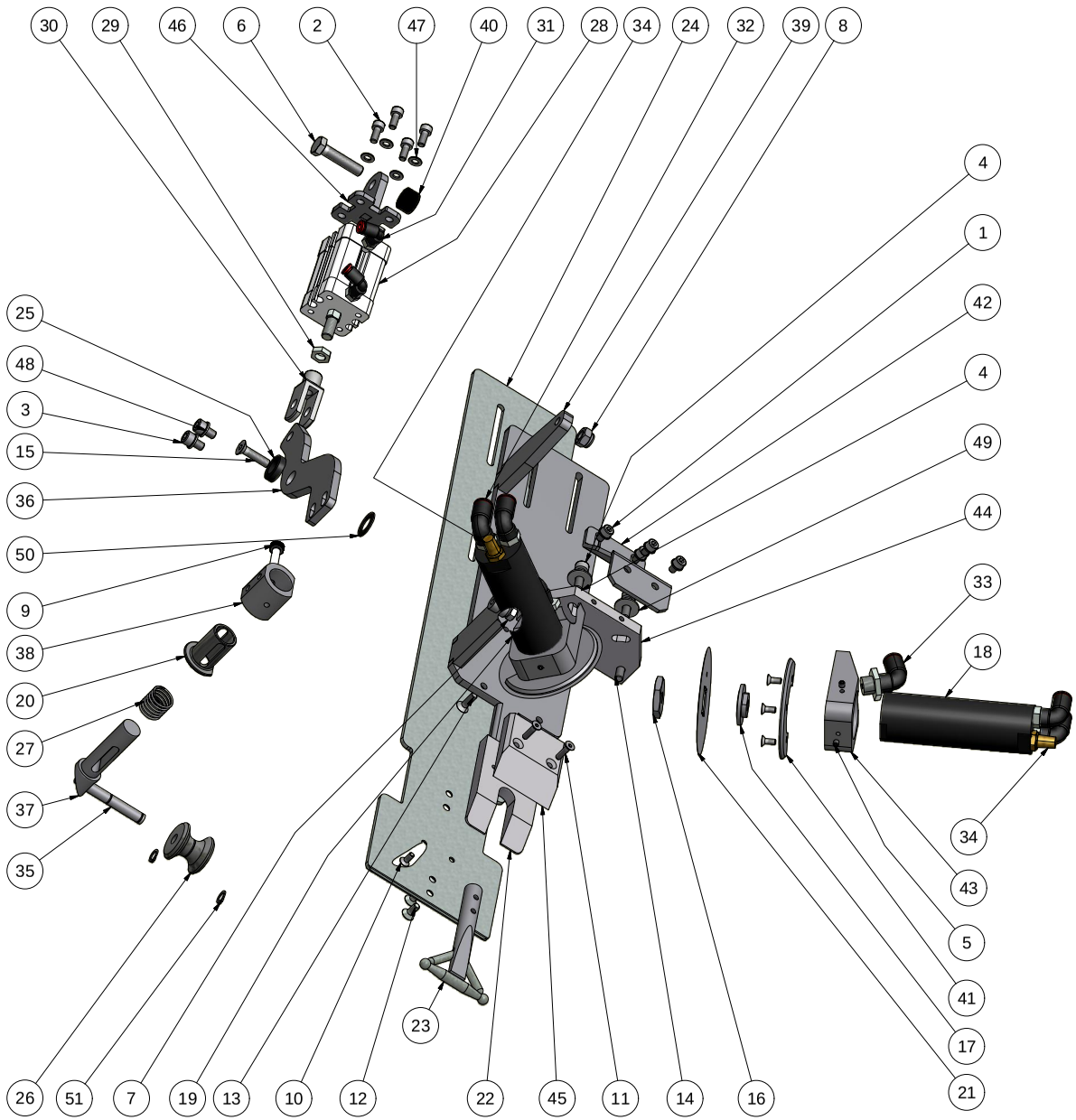

Parts List

ITEM	QTY	PART NUMBER	DESCRIPTION
1	4	10205008	Bolt.unbraco cyl.5x8 FZB
2	4	10205012	Bolt unbrako cyl 5x12 FZB
3	2	10206010	Bolt unbrako cyl 6x10 FZB
4	2	10206020	Bolt unbraco cyl 6x20 FZB
5	4	10504005	Stop screw 4x5 black
6	1	11408035	Hexagon bolt M8x35 FZB
7	1	1506000	Nut M6 FZB
8	1	17908000	Self-locking nut M8 FZB
9	1	20205025	Fitting bolt M5-6x25mm
10	8	20404010	Hexagon countersunk 4x10 FZB
11	2	20404016	Hexagon countersunk 4x16 FZB
12	4	20405012	Hexagon countersunk 5x12 FZB
13	2	20405016	Hexagon countersunk 5x16 FZB
14	2	20406020	Hexagon countersunk M6x20 FZB
15	1	20406025	Hexagon countersunk 6x25 FZB
16	2	206070	Lock for knives Ï 70-Ï 80
17	2	206071	Hub for knives Ï 70-80
18	1	206084	Air motor LZB 22A049-55
19	1	206091	Air motor LZB 22A049 Links
20	1	207820	Bushing for tailroll
21	2	207828	Knife f. slicing machine 80 mm
22	1	207832	Wedge for belly loosener 2007
23	1	207836	Belly loosener - short 2007
24	1	207838	Plate for belly loosener 2007
25	1	207855	Bush for tailroll - endpiece
26	1	207860	Tail roll combi cut
27	1	207931	Compression spring 1.8-16-20
28	1	210310	Cylinder RA/192025/M/25
29	1	210421	Lock nut M/P1501/60
30	1	211100	F-Joint QM-8020-25
31	2	215750	Swirvel elbow Ï 4 M5
32	4	216536	Swirvel elbow Ï 8 1/8"
33	2	216537	Swirvel elbow Ï 8 1/4"
34	2	216796	Silencer 1/8" T40C-1800
35	1	30330	shaft for tail roll
36	1	30340	Arm for swing - tailroll
37	1	30345	Shaft for tailroll adjustment
38	1	30425	Consol for tailroll
39	1	30436	Plate ammenbly - tailroll system
40	1	30437	Distance bush f.cyl RM192000
41	2	30511	Screen for 80mm knife
42	1	30515	Coverplate for knifes
43	2	30516	Bracket for air motor
44	1	30518	Baseplate for air motor
45	1	30520	Wedge for female
46	1	30647	Mounting bracket for ß25 cyl.
47	8	82105900	Washer M5 FZB
48	2	82106000	Washer M6 FZB
49	2	82606000	Washer Ï 6,4x18x1,6
50	1	88712100	Shim washer ß12x18x1,0
51	2	89708000	Seeger ring for shaft Ï 8 din 471

Alle kanter reifes
Breake all edges

REVISION HISTORY

REV	DESCRIPTION	DATE	APPROVED
A	Made	10-06-2014	KL

This drawing is the property of HEDENSTED GRUPPEN A/S. It must not be copied or disclosed to any third parties.

Hedensted Gruppen

Scale: 0,40 : 1	Ikke angivet tolerancer iht./Not specified tolerance according to:		Sheet size: A2
	Overfl. beskaffenhed/Surface properties:		Sheet: 1 /2
Part No.: 30428	Material:		
Description: Assembly tailroll system QC			
Description: Quick Cut 2011			

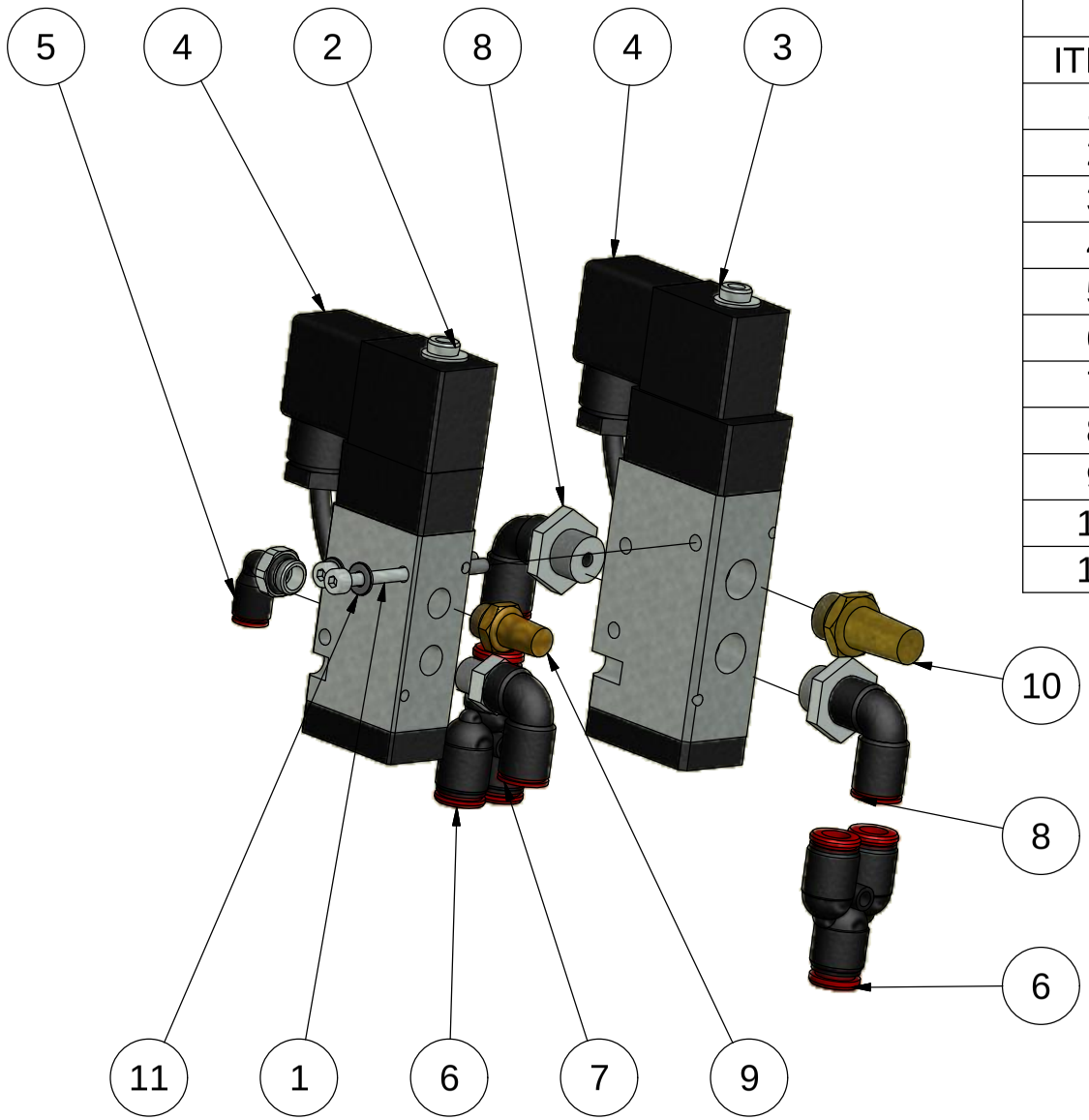

Parts List

ITEM	QTY	PART NUMBER	DESCRIPTION
1	2	10204055	Bolt unbraco cyl 4x55 FZB
2	1	215040	Valve solenoid 3-2 12v 1/8"
3	1	215047	Valve solenoid 3-2 12v 1-4
4	2	215184	Socket M/P43313/3
5	1	215760	Swirvel elbow Ï 6mm 1/8"
6	2	215870	Y-connector Ï 8
7	1	216536	Swirvel elbow Ï 8 1/8"
8	2	216537	Swirvel elbow Ï 8 1/4"
9	1	216796	Silencer 1/8" T40C-1800
10	1	216797	Silencer 1/4" T40C-2800
11	2	82104000	Washer M4 FZB

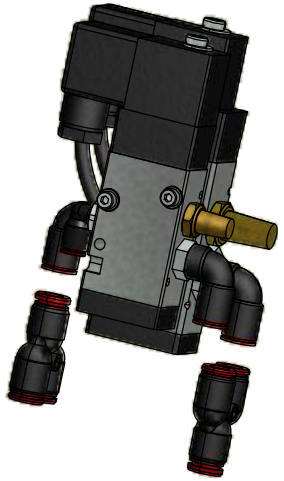

Alle kanter reifes
Breake all edges

REVISION HISTORY

REV	DESCRIPTION	DATE	APPROVED
A	New drawing	06-01-2011	KL
B	Pos 6 added	21-01-2013	MRH

This document is strictly confidential and must on no account be copied or disclosed to any third person.
HEDENSTED GRUPPEN A/S

Hedensted Gruppen

Scale: 1:2	Ikke angivet tolerancer iht./ Not specificed tolerance according to: DS/ISO 2768-m		Konst./Designed:
	Overfl. beskaffenhed/Surface properties:		Tegnet/Drafted: KL
Part No.: 30836	Udfoldet iht./ Unfolding according to:	Material:	Date: 06-01-2011

Description: Valve assembly for Quick cut

Description: Used for Quick Cut & Combi cut without powblow

Sidst gemt af/Last saved by: KL	Sidst gemt/Last saved: 06-01-2011	Sheet size: A4	Sheet 1 / 1

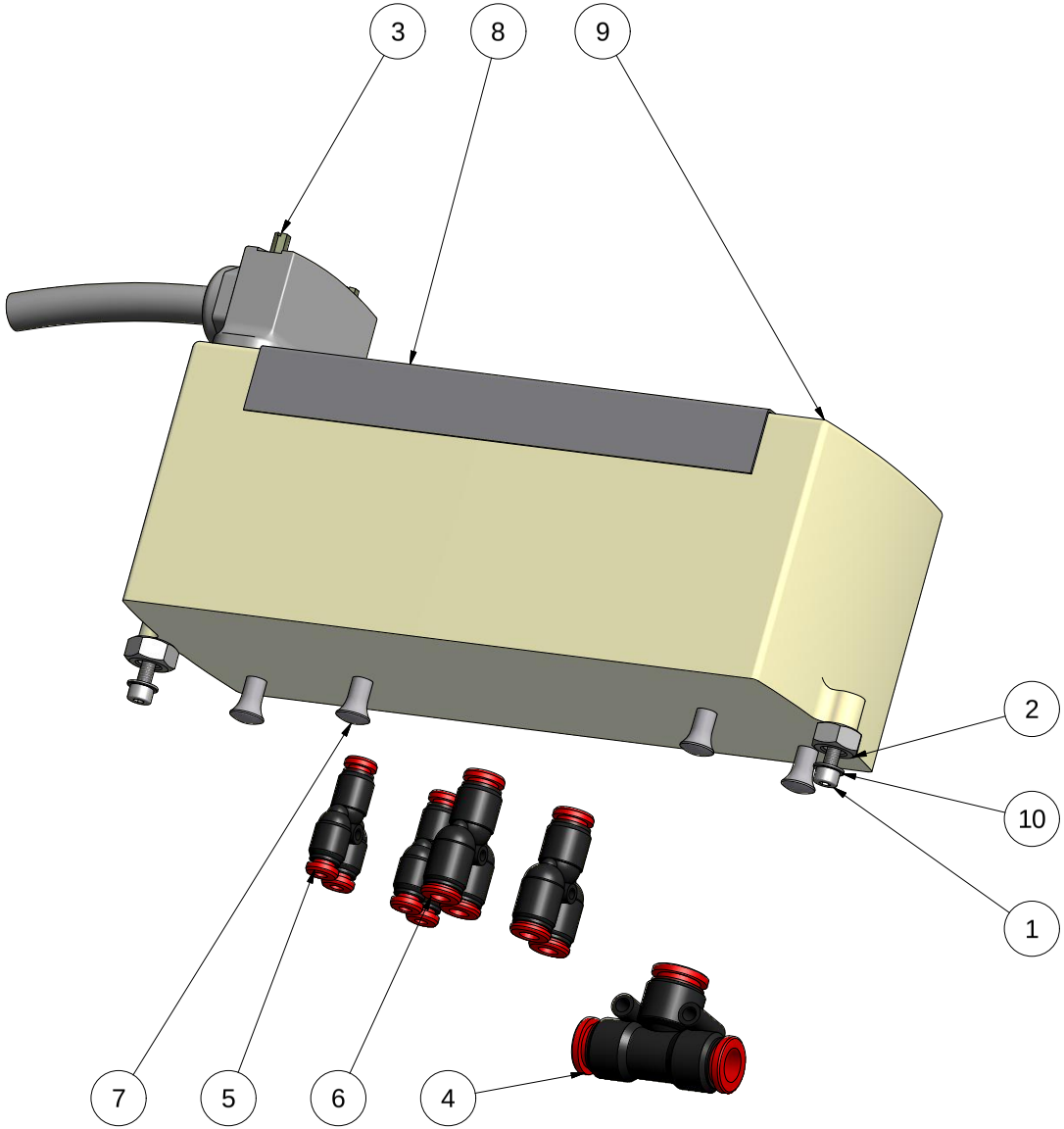

PARTS LIST			
ITEM	QTY	PART NUMBER	DESCRIPTION
1	2	10204020	Bolt.unbraco cyl 4x20 FZB
2	2	1508000	Nut M8 FZB
3	1	215172	Cable 3m Sub44 VM10 90gr
4	1	215855	T-piece outs. Ï 10 x 10mm
5	2	215857	Y-connector Ï 4mm C00820400
6	2	215860	Y-connector Ï 6mm
7	4	216748	Plug Ï 6 mm
8	1	30168	Shield for VM10 valve
9	1	30299	Valve Solenoid 16 stations for Quick cut
10	2	82104000	Washer M4 FZB

Alle kanter reifes
Breake all edges

REV	DESCRIPTION	DATE	APPROVED
A	Made	17-0-2013	MRH
B	2x y-connecter ß4 added	16-04-2014	KL

REVISION HISTORY

The drawing is strictly confidential and may not be reproduced or disclosed to any third parties.
HEDENSTED GRUPPEN A/S

Hedensted Gruppen

Scale: 1 : 1,5	Ikke angivet tolerancer iht./ Not specificed tolerance according to: DS/ISO 2768-m	Sheet size: A3
	Overfl. beskaffenhed/Surface properties: No	Sheet: 1 /1
Part No.: 30894	Material:	
Description: VM10 assambly		
Description:		

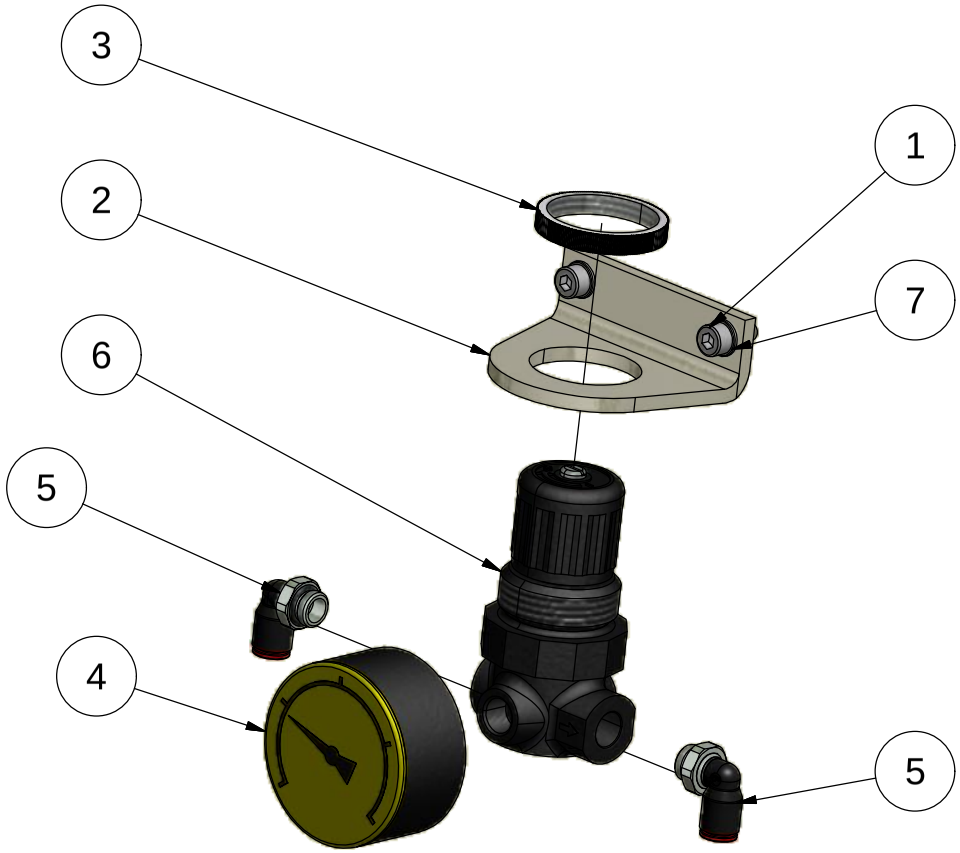

Parts List

ITEM	QTY	PART NUMBER	DESCRIPTION
1	2	10205012	Bolt unbrako cyl 5x12 FZB
2	1	214180	Mounting brace
3	1	215535	Panel mounting nut
4	1	215538	Gauge 0-4Bar 1/8" Ï 50mm
5	2	215760	Swirvel elbow Ï 6mm 1/8"
6	1	216205	Regulator 3,5 bar 1/8"
7	2	82105900	Washer M5 FZB

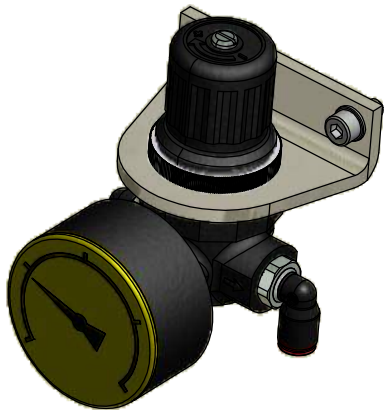

Alle kanter reifes
Breake all edges

REVISION HISTORY

REV	DESCRIPTION	DATE	APPROVED
A	New drawing	06-01-2011	KL

This document is strictly confidential and must on no account be copied or disclosed to any third person.
HEDENSTED GRUPPEN A/S

Hedensted Gruppen

Scale: 1:2	Ikke angivet tolerancer iht./ Not specificed tolerance according to: DS/ISO 2768-m		Konst./Designed:
	Overfl. beskaffenhed/Surface properties:		Tegnet/Drafted:
Part No.: 207995	Udfoldet iht./ Unfolding according to:	Material:	Date: 06-01-2011
Description: Regulator for stretch - assembly			
Description: Used for Combi cut & Quich cut			
Sidst gemt af/Last saved by: KL	Sidst gemt/Last saved: 06-01-2011	Sheet size: A4	Sheet 1 / 1

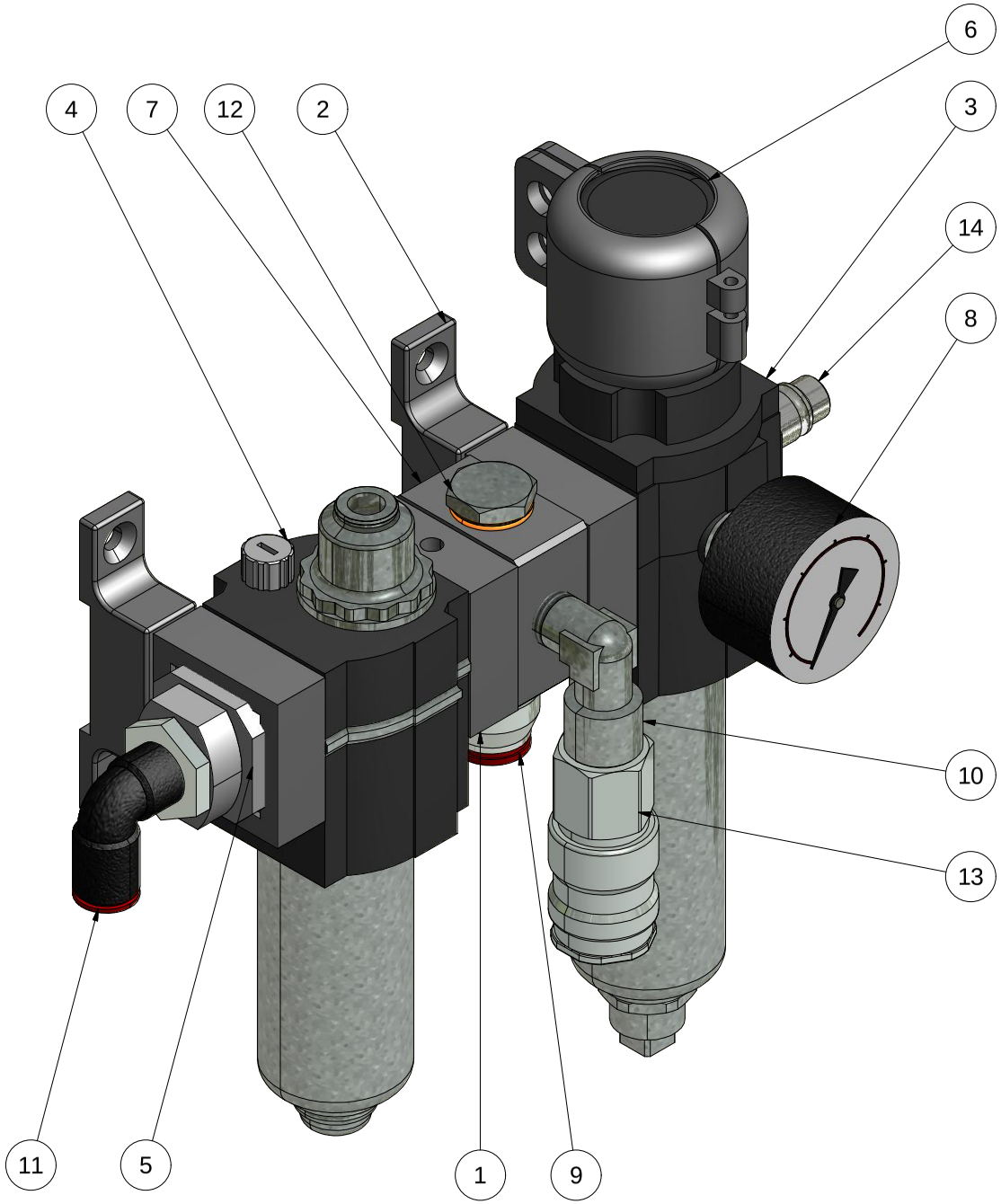

PARTS LIST			
ITEM	QTY	PART NUMBER	DESCRIPTION
1	1	210175	Quickclamp
2	2	210176	Mounting brace
3	1	210178	Filter regulator
4	1	210185	Sight feed lubricator
5	1	210195	Insert
6	1	210196	Cover for regulator
7	1	210198	Splitter
8	1	215550	Gauge 0-10 bar 1/8" Ï 40
9	1	215940	Straight connector Ï 10 1-4
10	1	216358	Elbow male 1/4" female 1/4"
11	1	216537	Swirvel elbow Ï 8 1/4"
12	1	216739	Plug male 1/4"
13	1	217020	Quick coupling female 1/4" o.
14	1	217051	Quick release coupling male 1/4"

Alle kanter reifes
Breake all edges

REV	DESCRIPTION	DATE	APPROVED
A	New drawing	07-03-2012	LL
B	1/4" coupling added	10-02-2015	KL

REVISION HISTORY

The document is only conditional and can no account be copied or disclosed to any third parties. HEDENSTED GRUPPEN A/S

Hedensted Gruppen

Scale: 1 : 1	Ikke angivet tolerancer iht./ Not specificed tolerance according to: DS/ISO 2768-m		Sheet size: A3
	Overfl. beskaffenhed/Surface properties: No		Sheet: 1 /1
Part No.: 210188	Material:		
Description: Air connection unit CC & QC			
Description: Filter, oiler and reduc. manom			

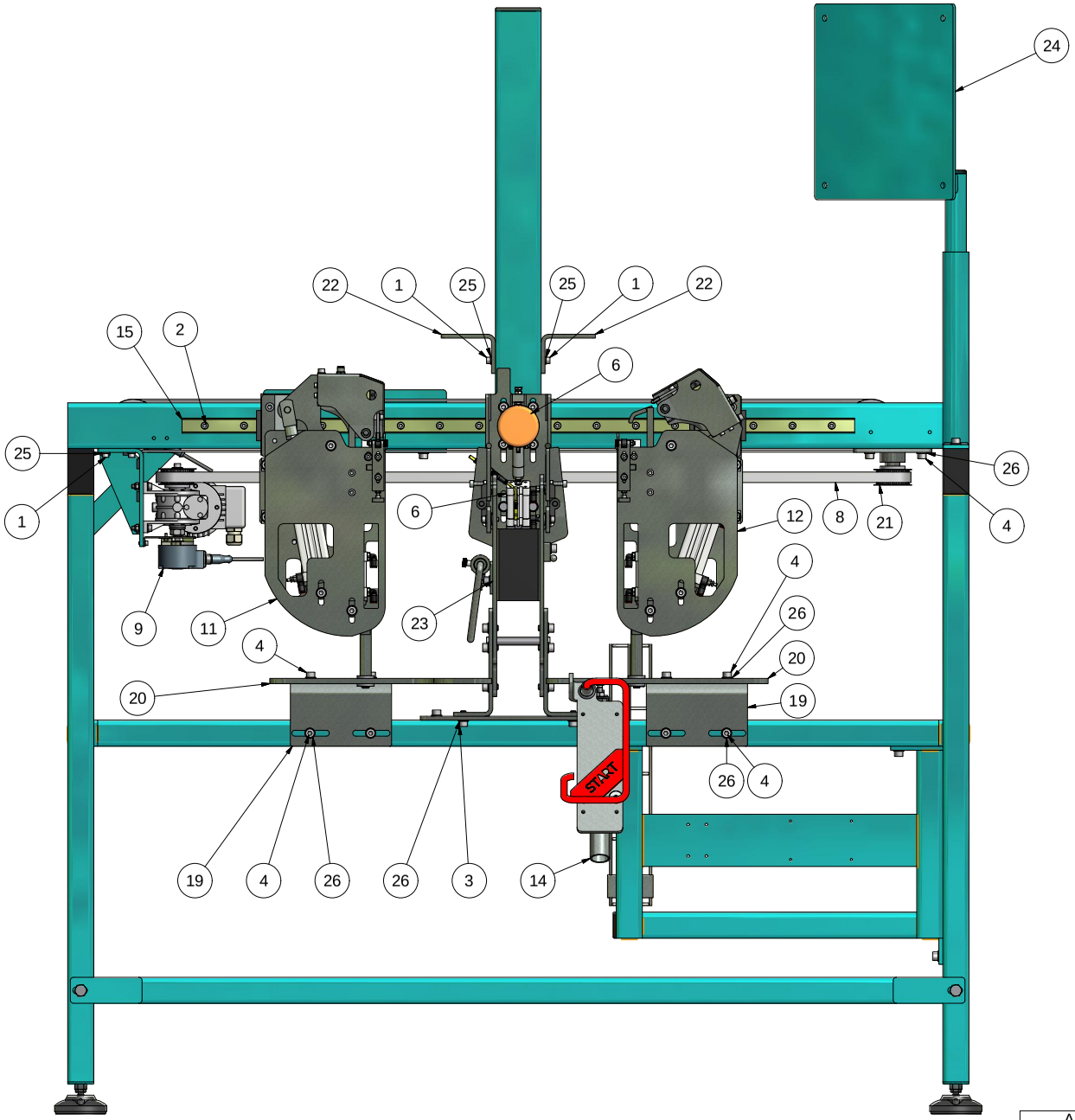

PARTS LIST			
ITEM	QTY	PART NUMBER	DESCRIPTION
1	6	10206016	Bolt. unbraco cyl 6x16 FZB
2	21	10206020	Bolt unbraco cyl 6x20 FZB
3	4	10208016	Bolt.unbraco cyl 8x16 FZB
4	22	10208020	Bolt.unbraco cyl 8x20 FZB
5	2	10208045	Bolt unbraco cyl 8x45 FZB
6	1	207862	Assembly crosscut knife 2010
7	1	207922	Tooth belt 16AT5 - 2500 endless
8	1	207923	Tooth belt 16AT5 - 2360 endless
9	1	207959	Gear for crossent knife 2010
10	1	207962	Assembly arm - pull pawholder 2010
11	1	207971	Pawsystem_2010 left side
12	1	207975	Pawsystem_2010, right side
13	1	207977	Arm for pull pawholders left 2010
14	1	207979	Plate for knee pedal complete 2010
15	1	207988	Ball guide rail size 25-1030
16	1	210179	Cylinder for paw stretch
17	1	30262	Assembly AT5 pulley fixed end
18	1	30263	Assembly pulley AT5
19	2	30380	Angle bracket for pawholder guide
20	2	30385	Guide for pawholder
21	1	30586	Assembly AT5 -32 pulley
22	2	30786	Bracket for right cover
23	1	30837	Bodyholder for quick cut
24	1	30890	Frame for Quick Cut
25	6	82106000	Washer M6 FZB
26	26	82108000	Washer M8 FZB
27	2	82608000	Washer ß8x24x2 DIN9021A

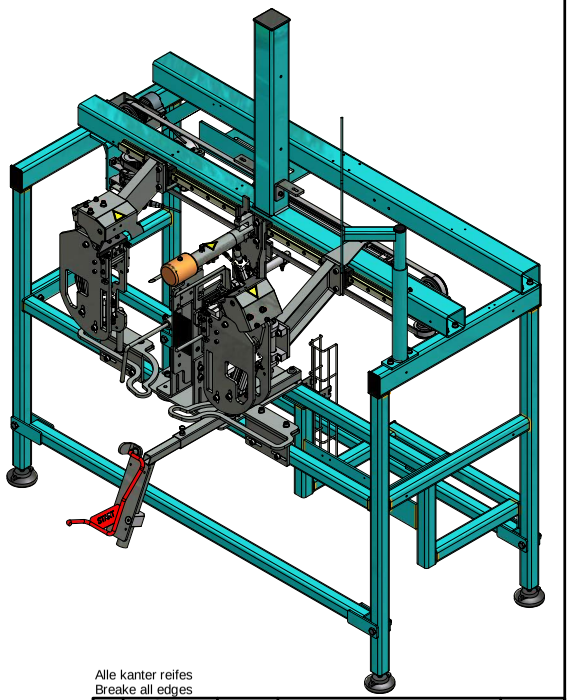

Alle kanter reifes
Breake all edges

REV	DESCRIPTION	DATE	APPROVED
A	Made	18-01-2013	MRH

REVISION HISTORY

HEDENSTED GRUPPEN A/S

Hedensted Gruppen

Scale: 1: 5	Alle angivet tolerancer iht./Not specified tolerance according to: DS/ISO 2768-m	Sheet size: A2
	Overfl. beskaffenhed/Surface properties: No	Sheet: 1 /2
Part No.: 30896	Material:	
Description: Quick cut 2011 assembly 1		
Description:		

F (1 : 3)

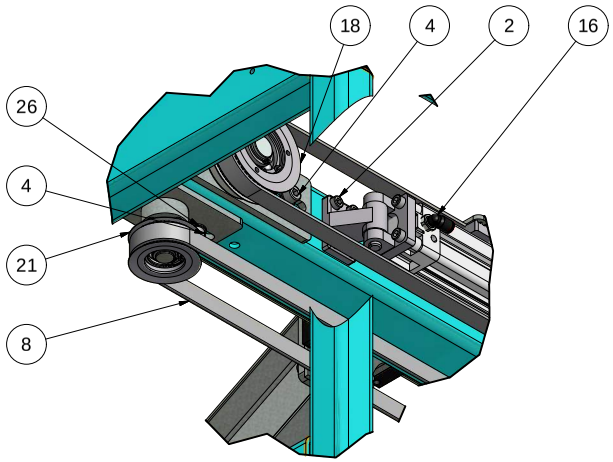

E (1 : 3)

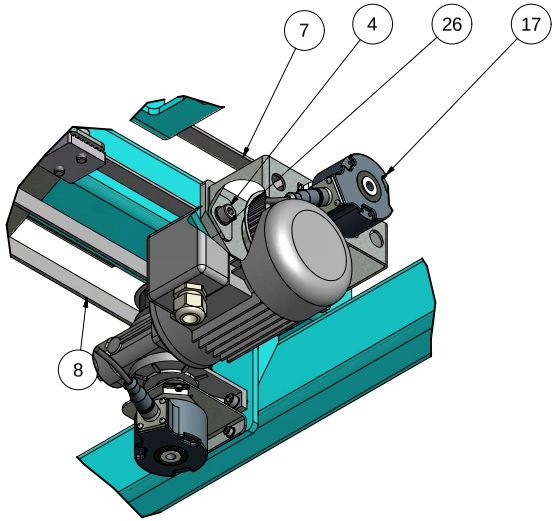

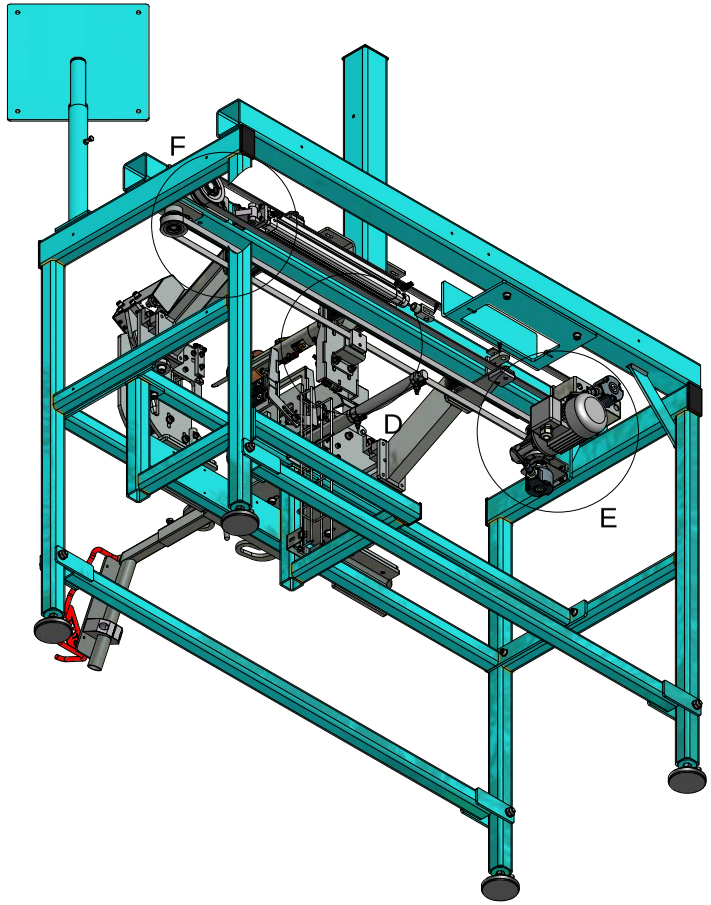

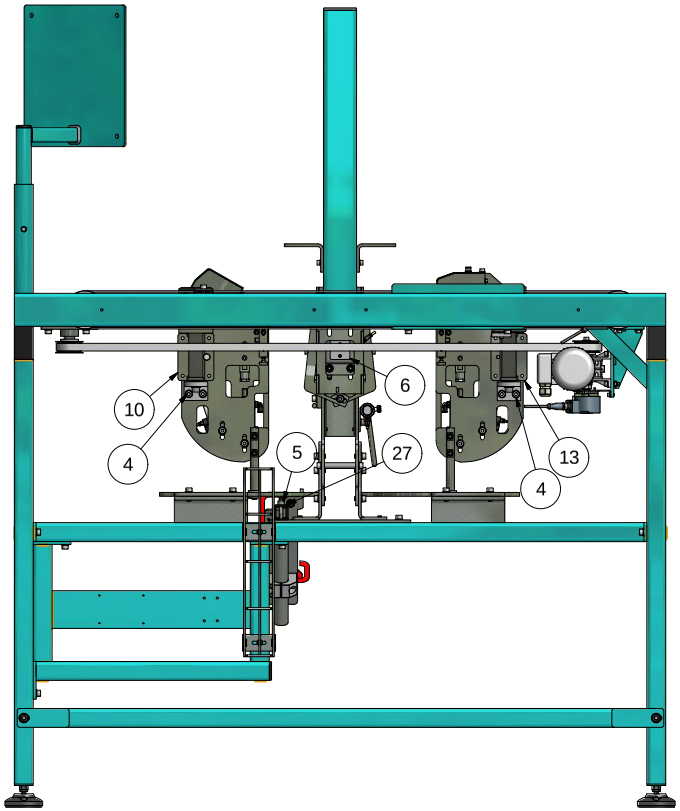

D (1 : 3)

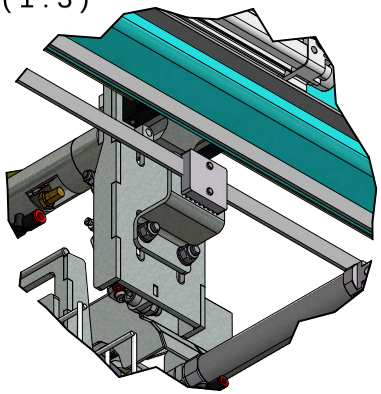

Alle kanter reifes
Breake all edges

HEDENSTED GRUPPEN AS	Scale: 1: 5	Alle angivet tolerancer iht./Not specified tolerance according to: DS/ISO 2768-m	Sheet size: A2
		Overfl. beskaffenhed/Surface properties: No	Sheet: 2 /2
	Part No.: 30896	Material:	
	Description: Quick cut 2011 assembly 1		
	Description:		

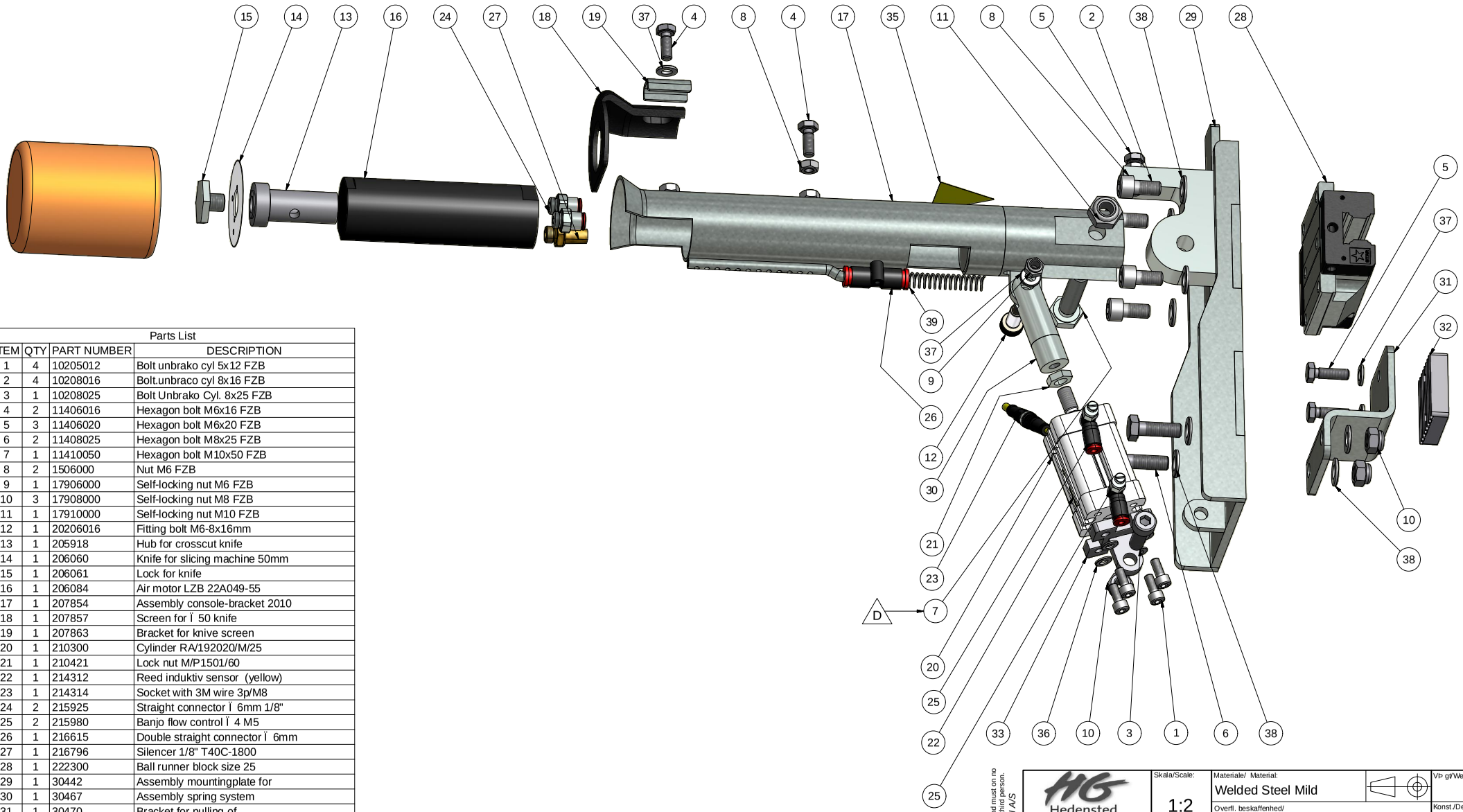

Parts List			
ITEM	QTY	PART NUMBER	DESCRIPTION
1	4	10205012	Bolt unbrako cyl 5x12 FZB
2	4	10208016	Bolt.unbraco cyl 8x16 FZB
3	1	10208025	Bolt Unbrako Cyl. 8x25 FZB
4	2	11406016	Hexagon bolt M6x16 FZB
5	3	11406020	Hexagon bolt M6x20 FZB
6	2	11408025	Hexagon bolt M8x25 FZB
7	1	11410050	Hexagon bolt M10x50 FZB
8	2	1506000	Nut M6 FZB
9	1	17906000	Self-locking nut M6 FZB
10	3	17908000	Self-locking nut M8 FZB
11	1	17910000	Self-locking nut M10 FZB
12	1	20206016	Fitting bolt M6-8x16mm
13	1	205918	Hub for crosscut knife
14	1	206060	Knife for slicing machine 50mm
15	1	206061	Lock for knife
16	1	206084	Air motor LZB 22A049-55
17	1	207854	Assembly console-bracket 2010
18	1	207857	Screen for Ï 50 knife
19	1	207863	Bracket for knive screen
20	1	210300	Cylinder RA/192020/M/25
21	1	210421	Lock nut M/P1501/60
22	1	214312	Reed induktiv sensor (yellow)
23	1	214314	Socket with 3M wire 3p/M8
24	2	215925	Straight connector Ï 6mm 1/8"
25	2	215980	Banjo flow control Ï 4 M5
26	1	216615	Double straight connector Ï 6mm
27	1	216796	Silencer 1/8" T40C-1800
28	1	222300	Ball runner block size 25
29	1	30442	Assembly mountingplate for
30	1	30467	Assembly spring system
31	1	30470	Bracket for pulling of
32	1	30598	Clamping plate for AT5
33	1	30644	Assembly mountingbracket
34	1	30981	Endcab Yellow rubber
35	1	31002	Warning Sign rotating knives
36	4	82105900	Washer M5 FZB
37	4	82106000	Washer M6 FZB
38	8	82108000	Washer M8 FZB
39	1	M101054	Spring Ï 1-D9-L45

REVISION HISTORY			
REV	DESCRIPTION	DATE	APPROVED
A	New drawing	01-06-2010	KL
B	30442 changed	01-06-2010	KL
C	30981 and 31002 added	23-01-2013	MRH
D	Item 1141045 changed to 1141050	18-10-2013	LL
E	M101054 added	09-03-2015	MRH

This document is strictly confidential and must on no account be copied or disclosed to any third person.
HEDENSTED GRUPPEN A/S

Hedensted Gruppen

Skala/Scale: 1:2

Materiale/ Material: Welded Steel Mild

Overfl. beskaffenhed/ Surface properties:

VÆgt/Weight: kg

Konst./Designed:

ID-Nr./Part No.: 207862

Udfoldet iht./ Unfolding according to:

Ikke angivet tolerancer iht./ Not specificed tolerance according to: DS/ISO 2768-m

Tegnet/Drafted:

Filnavn/Filename: 207862 Assembly crosscut knife 2010.iam

Dato/Date: 01-06-2010

Beskrivelse: Assembly crosscut knife 2010

Description:

Sidst gemt af/Last saved by: TV

Sidst gemt/Last saved: 01-06-2010

Papirstørrelse/Sheet size: A2

sheet 1 of 2

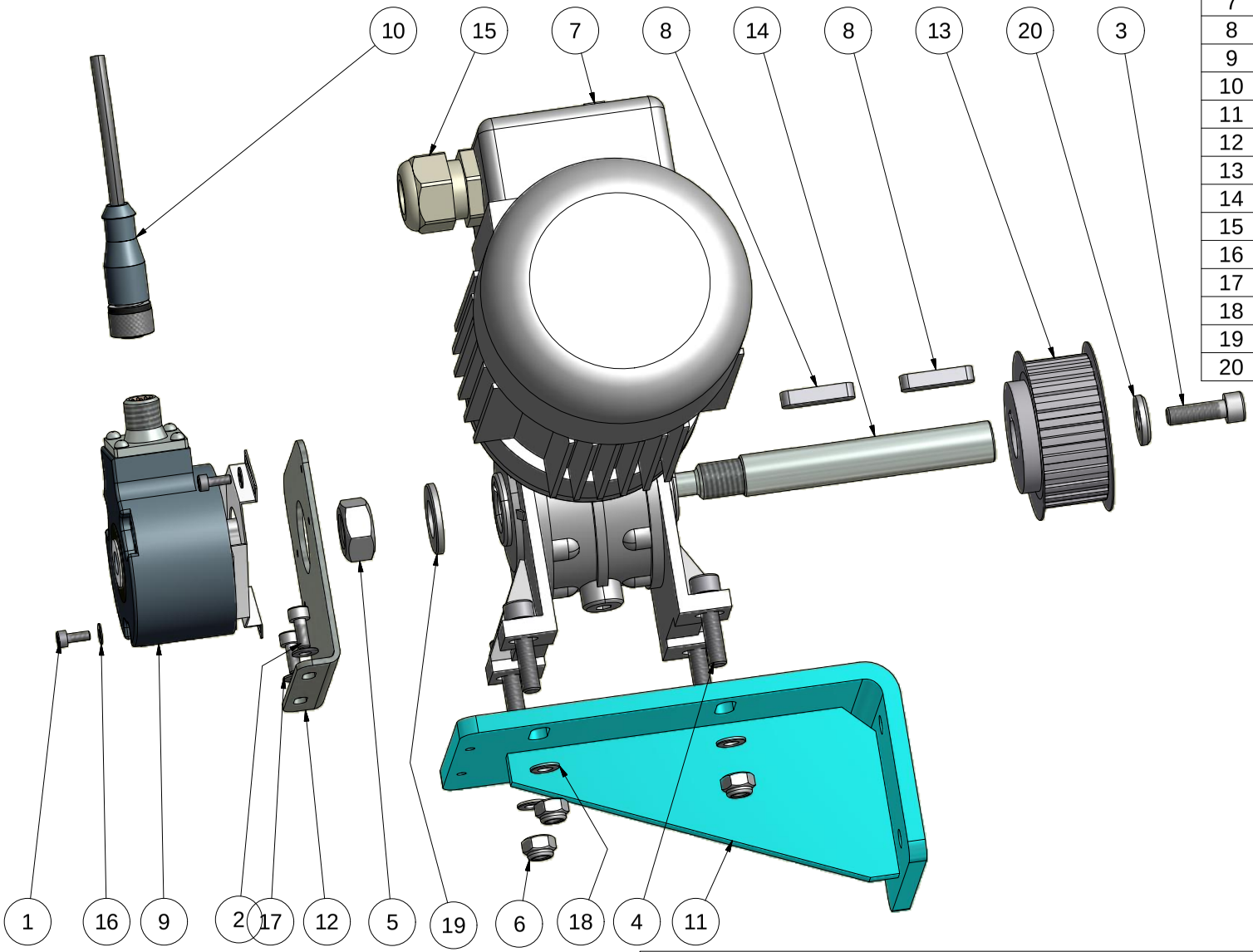

Parts List			
ITEM	QTY	PART NUMBER	DESCRIPTION
1	2	10203008	Bolt Unbraco cyl 3x08 FZB
2	2	10204010	Bolt.unbraco cyl 4x10 FZB
3	1	10206020	Bolt unbraco cyl 6x20 FZB
4	4	10206025	Bolt unbraco cyl 6x25 FZB
5	1	1512000	Nut M12 FZB
6	4	17906000	Self-locking nut M6 FZB
7	1	207903	Gearmotor RMI28 1:10 0.18kW
8	2	207946	Key 5x5x25mm DIN-6885A
9	1	207956	Encoder Type 8.5020.C922.0500
10	1	207957	Cable with plug 5 mtr
11	1	30144	Small engine bracket
12	1	30173	Bracket for encoder crosscut knife
13	1	30600	Pulley AT5 Z32 gear side
14	1	30780	Shaft for crosscut knife
15	1	600455	Cabel gland M20 Ï 5-12
16	2	82103000	Washer M3 FZB
17	2	82104000	Washer M4 FZB
18	8	82105900	Washer M5 FZB
19	1	82112000	Washer M12 FZB
20	1	87606000	Washer ß6,5x16,5x3 FZB

Alle kanter reifes
Breake all edges

REVISION HISTORY			
REV	DESCRIPTION	DATE	APPROVED
A	Made	28-05-2010	KL
B	Cabel added	06-01-2013	MRH

This document is strictly confidential and must on no account be copied or made available to third parties.
HEDENSTED GRUPPEN A/S

Hedensted Gruppen

Scale:

Ikke angivet tolerancer iht./ Not specificed tolerance according to: DS/ISO 2768-m

Konst./Designed:

Overfl. beskaffenhed/Surface properties:

Tegnet/Drafted:

Part No.: 207959

Udfoldet iht./ Unfolding according to:

Material:

Date: 05-03-2007

Description: Gear for crossent knife 2010

Description:

Sidst gemt af/Last saved by: KC

Sidst gemt/Last saved: 28-05-2010

Sheet size: A3

Sheet 1 / 2

Parts List				Parts List			
ITEM	QTY	PART NUMBER	DESCRIPTION	ITEM	QTY	PART NUMBER	DESCRIPTION
1	2	10208020	Bolt.unbraco cyl 8x20 FZB	9	1	30335	Right arm for pawholder
2	4	10208025	Bolt Unbrako Cyl. 8x25 FZB	10	2	30400	Hinge for pawlock
3	4	10208030	Bolt Unbrako cyl. 8x30 FZB	11	1	30410	Shaft for hinge - pawholder
4	2	10210020	Bolt unbraco cyl 10x20 FZB	12	2	30420	Hinge for pawlock part f. arm
5	1	11408060	Hexagon bolt m8x60 FZB	13	1	30595	Bracket for pull - belt
6	1	1508000	Nut M8 FZB	14	1	30598	Clamping plate for AT5
7	2	207845	Slide Bearing GFM-2023-21	15	4	82108000	Washer M8 FZB
8	1	222300	Ball runner block size 25	16	2	82110000	Washer M10 FZB

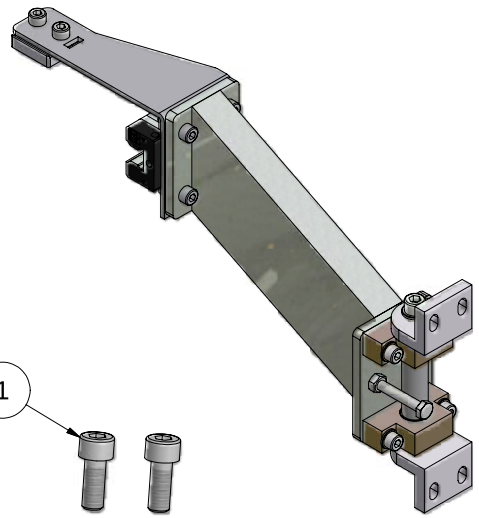

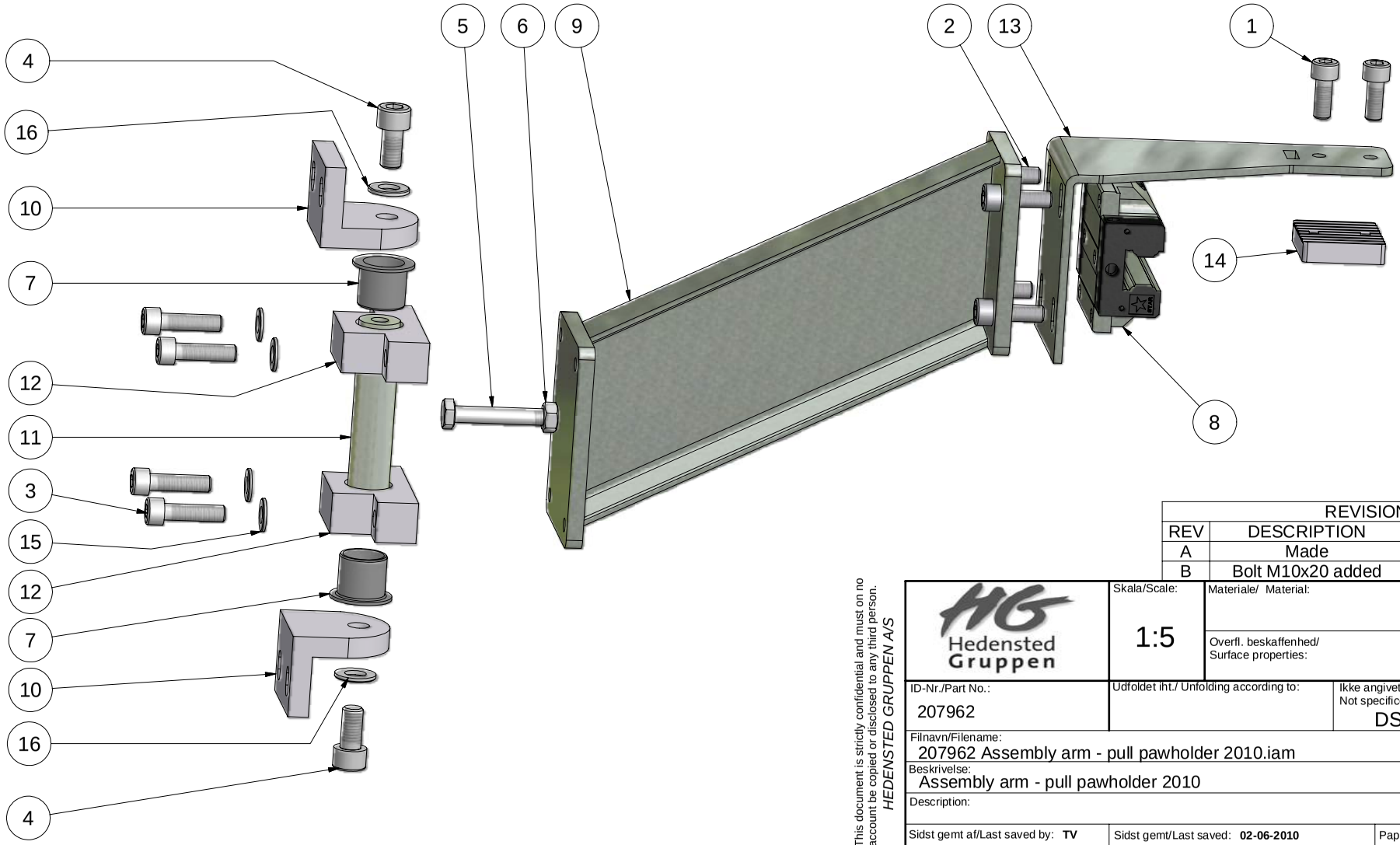

REVISION HISTORY			
REV	DESCRIPTION	DATE	APPROVED
A	Made	02-06-2010	KC
B	Bolt M10x20 added	03-12-2010	KC

This document is strictly confidential and must on no account be copied or disclosed to any third person.
HEDENSTED GRUPPEN A/S

Hedensted Gruppen

Skala/Scale: 1:5

Materiale/ Material:

Vægt/Weight: 3,75 kg

Overfl. beskaffenhed/ Surface properties:

Konst./Designed: *TV*

ID-Nr./Part No.: 207962

Udfoldet iht./ Unfolding according to:

Ikke angivet tolerancer iht./ Not specificed tolerance according to: DS/ISO 2768-m

Tegnet/Drafted: *Thomas Vittrup*

Filnavn/Filename: 207962 Assembly arm - pull pawholder 2010.iam

Dato/Date: 02-06-2010

Beskrivelse: Assembly arm - pull pawholder 2010

Description:

Sidst gemt af/Last saved by: **TV**

Sidst gemt/Last saved: **02-06-2010**

Papirstørrelse/Sheet size: A3

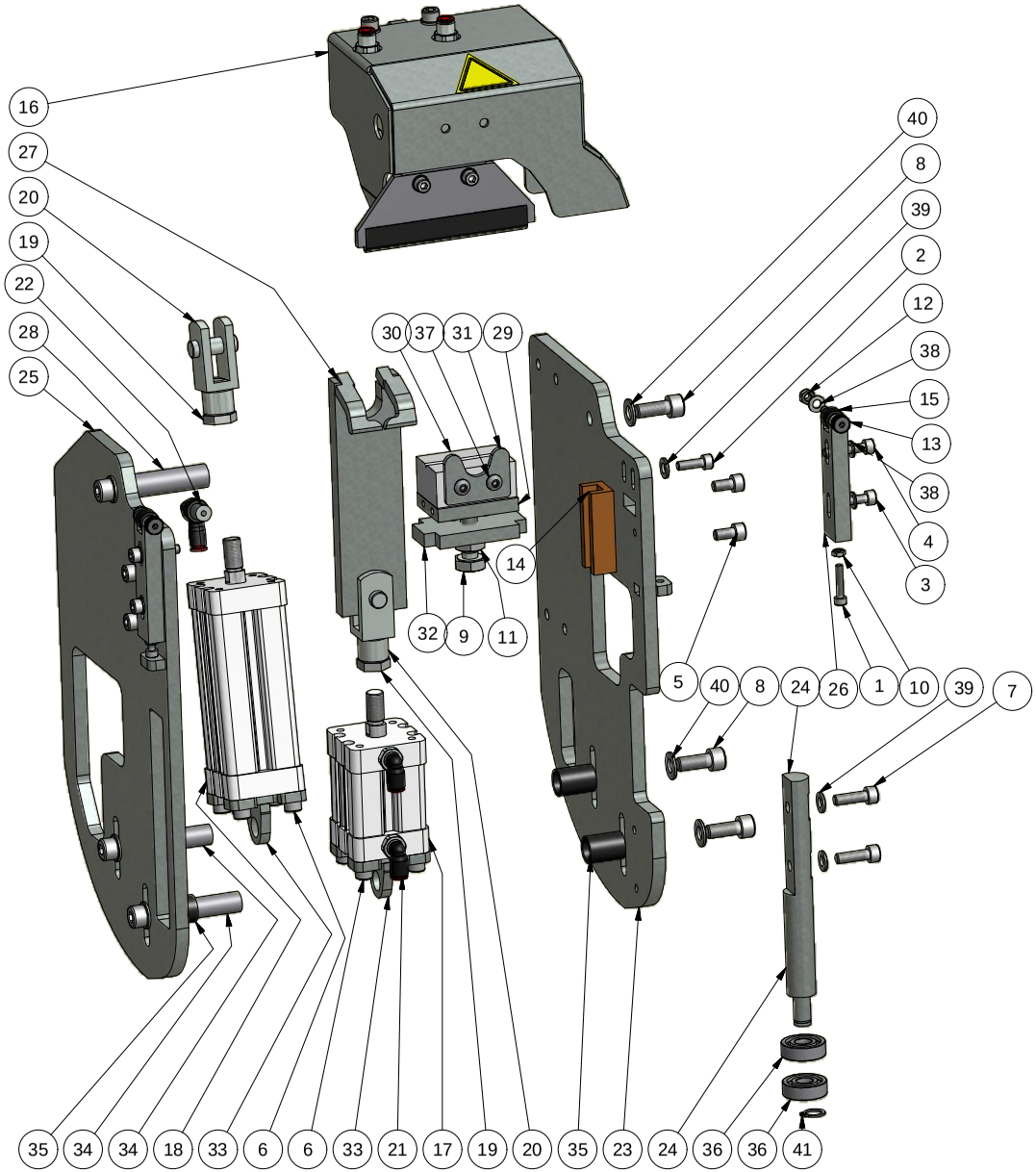

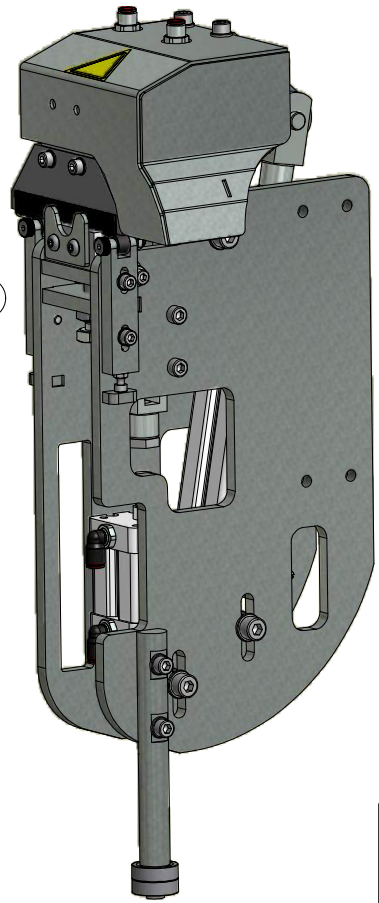

Parts List			
ITEM	QTY	PART NUMBER	DESCRIPTION
1	2	10204020	Bolt.unbraco cyl 4x20 FZB
2	4	10205016	Bolt unbrako cyl 5x16 FZB
3	2	10205020	Bolt unbrako cyl 5x20 FZB
4	2	10205025	Bolt unbrako cyl 5x25 FZB
5	4	10206012	Bolt unbrako cyl 6x12 FZB
6	8	10206016	Bolt. unbraco cyl 6x16 FZB
7	2	10206020	Bolt unbraco cyl 6x20 FZB
8	6	10208020	Bolt.unbraco cyl 8x20 FZB
9	1	11410030	Hexagon bolt M10x30 FZB
10	2	1504000	Nut M4 FZB
11	1	1510000	Nut M10 FZB
12	2	17905000	Self-locking nut M5 FZB
13	2	20205016	Fitting bolt M5-6x16mm
14	2	207865	Bearing for pawgrib
15	2	207948	Roller for paw cut with bushing
16	1	207969	Pawcut system_2010 - Left
17	1	210320	Cylinder RA/192032/M/25
18	1	210340	Cylinder RA/192032/M/80
19	2	210427	Lock nut MP150189_M10x1,25
20	2	214115	F-Joint QM-8025-25
21	2	215760	Swirvel elbow Ï 6mm 1/8"
22	2	215985	Banjo flow control Ï 4 1/8"
23	1	30356	Assembly back plate for paw system, left
24	1	30375	Shaft for turning, pawsystem
25	1	30396	Assembly, front plate for pawsystem, left
26	2	30455	Bracket for stop, pawknife
27	1	30491	Paw clamp assembly
28	1	30566	Shaft for turning pawcut
29	1	30570	Plate for mounting pawgrib block
30	1	30575	Block for pawgrib
31	1	30576	Bracket for pawposition
32	1	30580	Adjustmentplate for pawgrib
33	2	30641	Assembly bracket for ß32cylinder
34	2	30642	Shaft for cylinders
35	4	30643	Spacer 12,2 x 21,8
36	2	473013	Bearing 6000 2 Rs1
37	2	76005012	Bolt buttonhead 5x12 FZB
38	6	82105900	Washer M5 FZB
39	4	82106000	Washer M6 FZB
40	6	82108000	Washer M8 FZB
41	1	89710000	Seeger ring for shaft Ï 10 din 471

Alle kanter reifes
Breake all edges

REVISION HISTORY			
REV	DESCRIPTION	DATE	APPROVED
D	New drawing	28-05-2010	KL
E	Placement of loctite updated	03-12-2010	KC
F	Washers M6 removed	31-10-2012	LL
G	Sheet size changed	22-01-2013	MRH

This document is strictly confidential and must on no account be copied or made available to third parties.
HEDENSTED GRUPPEN A/S

Hedensted Gruppen

Scale: 1 : 2,5

Ikke angivet tolerancer iht./ Not specificed tolerance according to:

Sheet size: A3

Overfl. beskaffenhed/Surface properties:

Sheet: 1 /2

Part No.: 207971

Material:

Description: Pawsystem_2010 left side

Description:

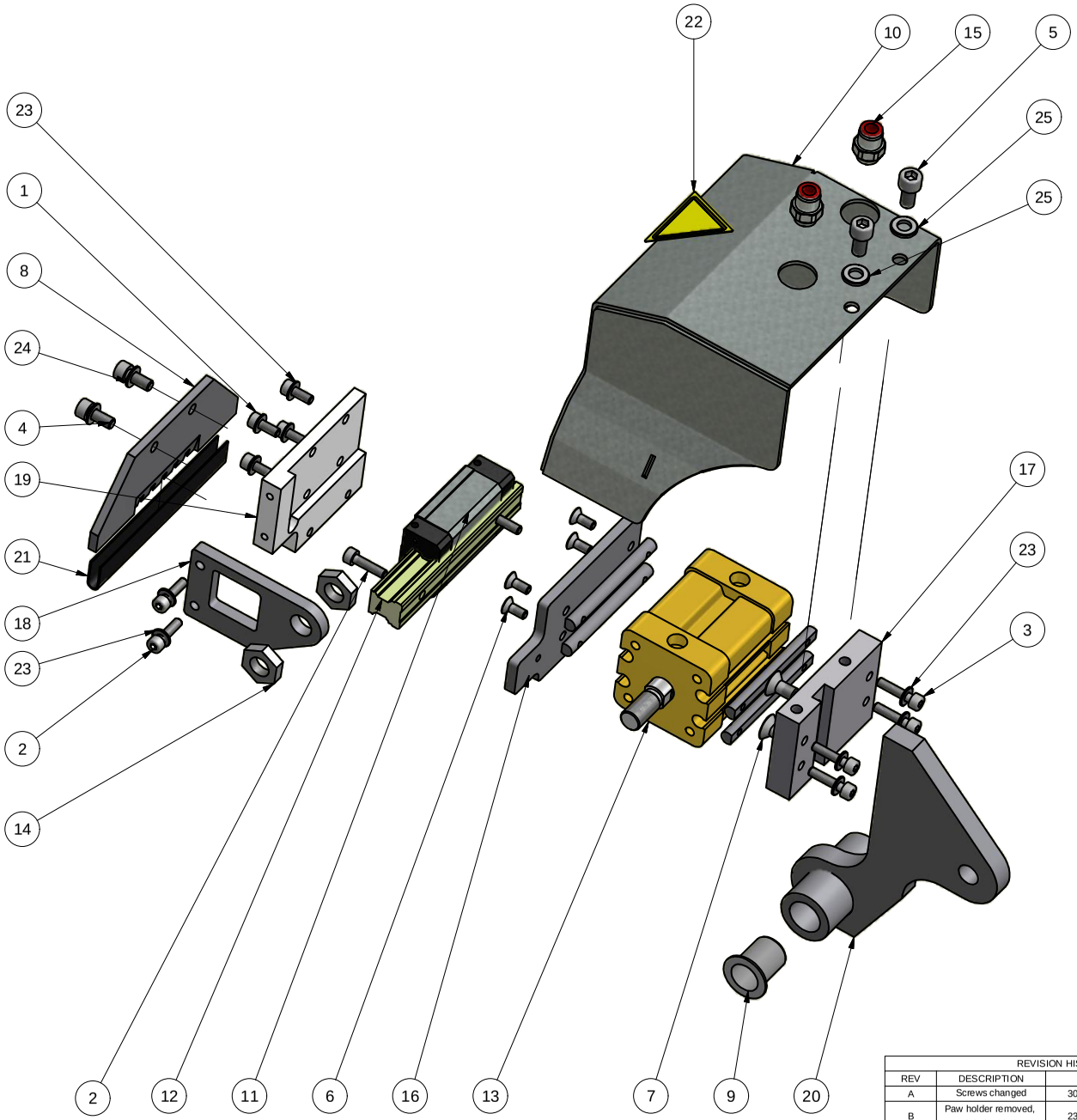

Parts List			
ITEM	QTY	PART NUMBER	DESCRIPTION
1	4	10204010	Bolt.unbraco cyl 4x10 FZB
2	4	10204016	Bolt.unbraco cyl 4x16 FZB
3	4	10204018	Bolt.unbraco cyl 4x18 FZB
4	2	10205012	Bolt unbrako cyl 5x12 FZB
5	2	10206012	Bolt unbrako cyl 6x12 FZB
6	4	20404010	Hexagon countersunk 4x10 FZB
7	2	20406012	Hexagon countersunk 6x12 FZB
8	1	207825	Paw knife CC HSS110-62-40-4mm
9	2	207840	Slide Bearing GFM-1416-21
10	1	207976	Left Screen for paw blow
11	1	207982	Ball runner block size 15
12	1	207984	Ball guide rail size 15-95
13	1	210330	Cylinder RA/192032/M/20
14	2	210427	Lock nut MP150189_M10x1,25
15	2	215925	Straight connector Ï 6mm 1/8"
16	1	30237	Mountingplate for left pawknife rail
17	1	30238	Top for console, pawknife
18	1	30250	Bracket for pawknife
19	1	30285	Mountingpiece for left pawknife
20	1	30323	Assembly, branch for turning
21	1	30979	Protection strip for pawknife
22	1	31004	Warning Sign knives
23	10	82104000	Washer M4 FZB
24	2	82105900	Washer M5 FZB
25	2	82106000	Washer M6 FZB
26	4	M100889	Groove nut 6,5x64-M4

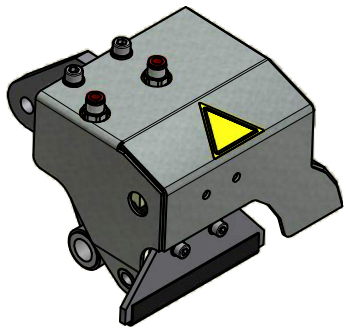

Break all edges
Alle kanter reifes

REVISION HISTORY			
REV	DESCRIPTION	DATE	APPROVED
A	Screws changed	30-10-2012	LL
B	Paw holder removed, label added	23-01-2013	MRH
C	Groove nut changed	06-01-2015	KL

This document is strictly confidential and must on no account be used, copied or transmitted without the express permission of HEDENSTED GRUPPEN A/S

Hedensted Gruppen

Scale: 1:2	Ikke angivet tolerancer iht./ Not specificed tolerance according to: DS/ISO 2768-m		Konst./Designed:
	Overfl. beskaffenhed/Surface properties:		Tegnet/Drafted: KL
Part No.: 207969	Udfoldet iht./ Unfolding according to:	Material:	Date: 26-05-2010
Beskrivelse: Pawcut system_2010 - Left			
Description: Combi / Quick cut			
Sidst gemt af/Last saved by: KL	Sidst gemt/Last saved: 26-05-2010	Sheet size: A3	Sheet 1 / 2

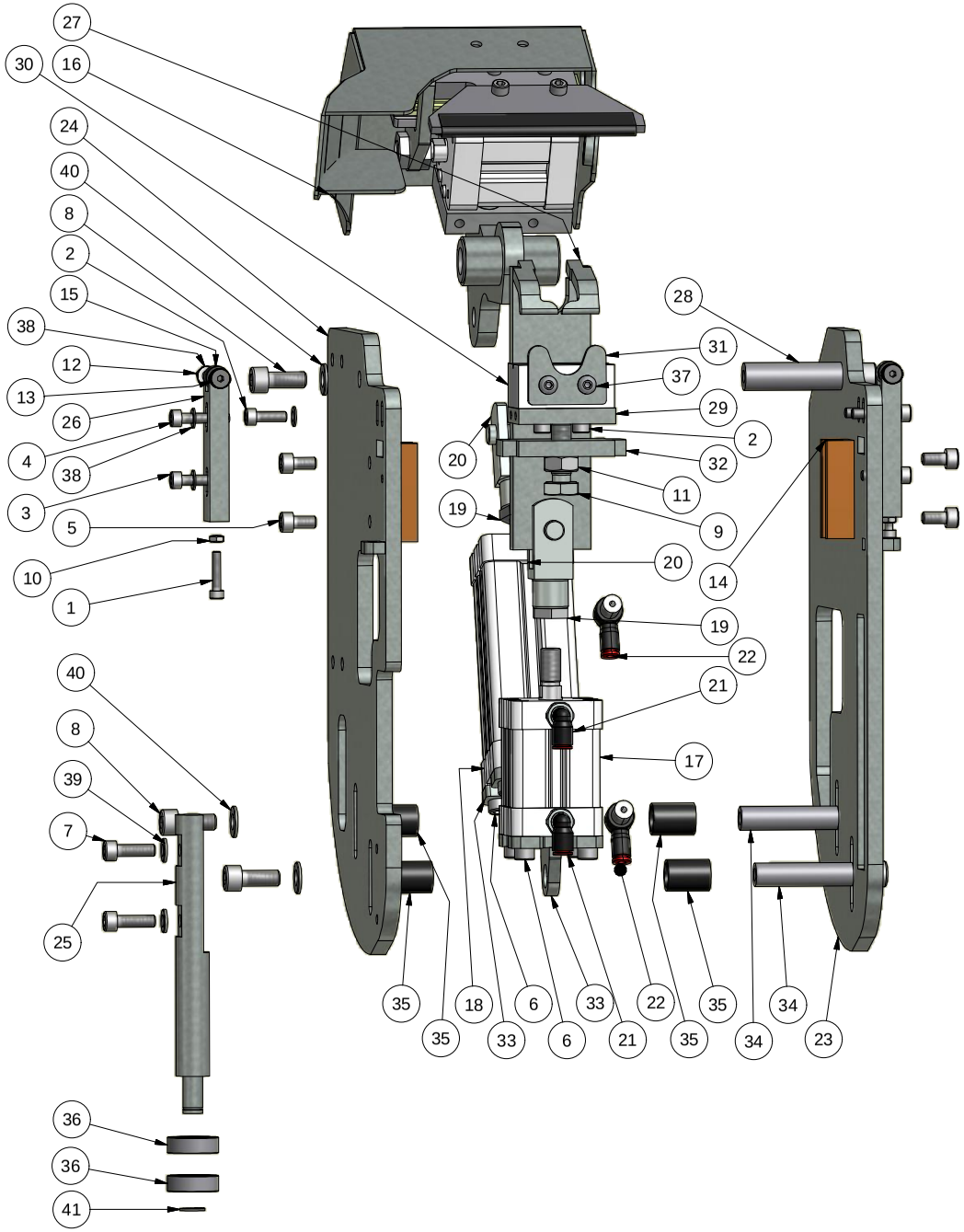

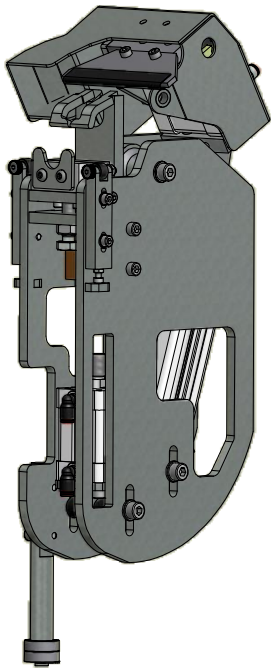

Parts List			
ITEM	QTY	PART NUMBER	DESCRIPTION
1	2	10204020	Bolt.unbraco cyl 4x20 FZB
2	4	10205016	Bolt unbrako cyl 5x16 FZB
3	2	10205020	Bolt unbrako cyl 5x20 FZB
4	2	10205025	Bolt unbrako cyl 5x25 FZB
5	4	10206012	Bolt unbrako cyl 6x12 FZB
6	8	10206016	Bolt. unbraco cyl 6x16 FZB
7	2	10206020	Bolt unbraco cyl 6x20 FZB
8	6	10208020	Bolt.unbraco cyl 8x20 FZB
9	1	11410030	Hexagon bolt M10x30 FZB
10	2	1504000	Nut M4 FZB
11	1	1510000	Nut M10 FZB
12	2	17905000	Self-locking nut M5 FZB
13	2	20205016	Fitting bolt M5-6x16mm
14	2	207865	Bearing for pawgrib
15	2	207948	Roller for paw cut with bushing
16	1	207973	Pawcut system_2010 - Right
17	1	210320	Cylinder RA/192032/M/25
18	1	210340	Cylinder RA/192032/M/80
19	2	210427	Lock nut MP150189_M10x1,25
20	2	214115	F-Joint QM-8025-25
21	2	215760	Swirvel elbow Ï 6mm 1/8"
22	2	215985	Banjo flow control Ï 4 1/8"
23	1	30232	Assembly front plate for paw system, right
24	1	30233	Assembly back plate for paw system, right
25	1	30375	Shaft for turning, pawsystem
26	2	30455	Bracket for stop, pawknife
27	1	30491	Paw clamp assembly
28	1	30566	Shaft for turning pawcut
29	1	30570	Plate for mounting pawgrib block
30	1	30575	Block for pawgrib
31	1	30576	Bracket for pawposition
32	1	30580	Adjustmentplate for pawgrib
33	2	30641	Assembly bracket for ß32cylinder
34	2	30642	Shaft for cylinders
35	4	30643	Spacer 12,2 x 21,8
36	2	473013	Bearing 6000 2 Rs1
37	2	76005012	Bolt buttonhead 5x12 FZB
38	8	82105900	Washer M5 FZB
39	2	82106000	Washer M6 FZB
40	6	82108000	Washer M8 FZB
41	1	89710000	Seeger ring for shaft Ï 10 din 471

REVISION HISTORY			
REV	DESCRIPTION	DATE	APPROVED
A	Name changed	27-05-2010	KL
B	Placement of loctite updated	03-12-2010	KC
D	Washers M6 removed	31-10-2012	LL

Alle kanter reifes
Breake all edges

This document is strictly confidential and must on no account be copied or made available to third parties.
HEDENSTED GRUPPEN A/S

Hedensted Gruppen

Scale: 1 : 2	Ikke angivet tolerancer iht./ Not specificed tolerance according to:	Sheet size: A3
	Overfl. beskaffenhed/Surface properties:	Sheet: 1 /2
Part No.: 207975	Material:	
Description: Pawsystem_2010, right side		
Description:		

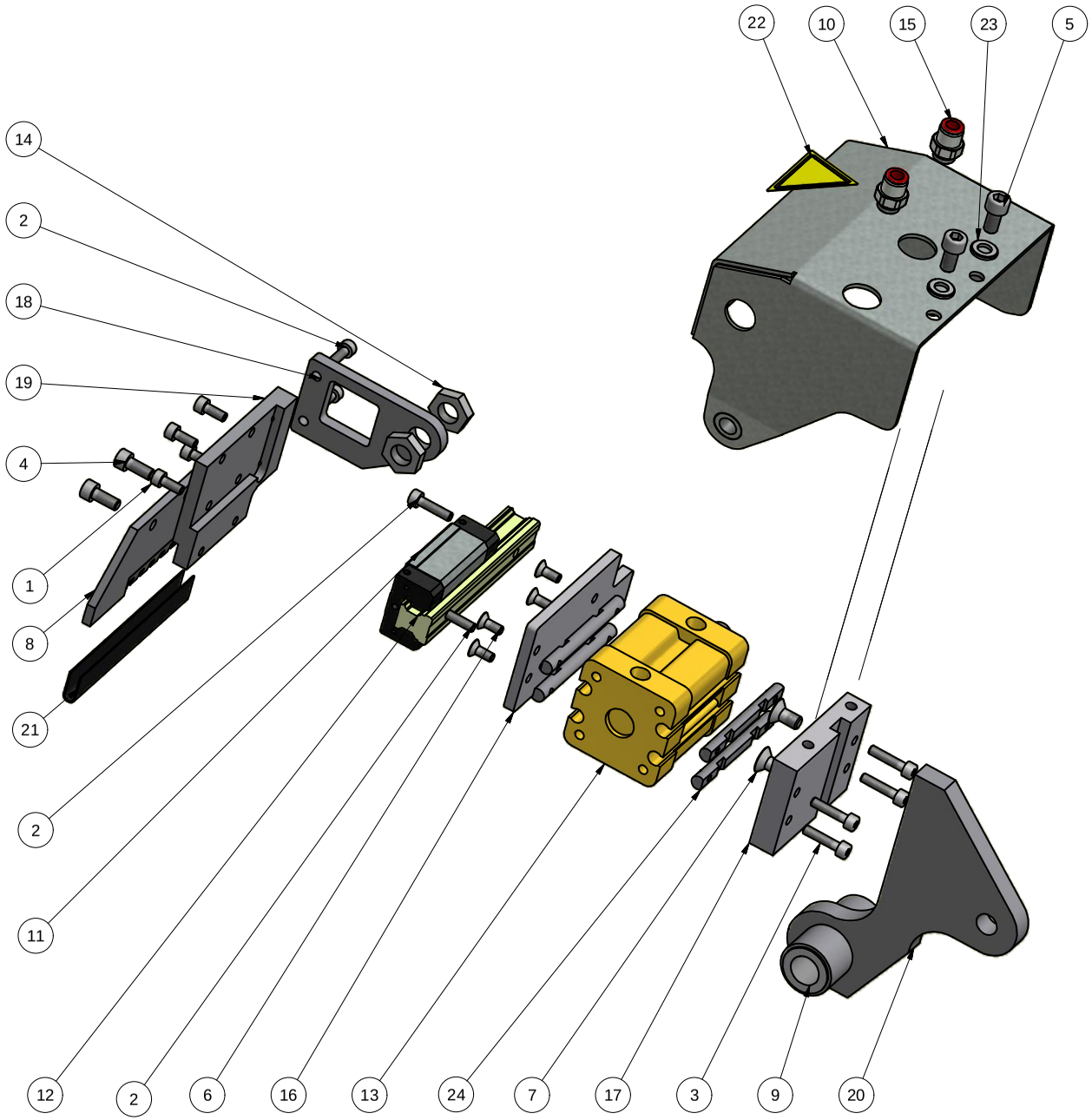

Parts List			
ITEM	QTY	PART NUMBER	DESCRIPTION
1	4	10204010	Bolt.unbraco cyl 4x10 FZB
2	4	10204016	Bolt.unbraco cyl 4x16 FZB
3	4	10204018	Bolt.unbraco cyl 4x18 FZB
4	2	10205012	Bolt unbrako cyl 5x12 FZB
5	2	10206012	Bolt unbrako cyl 6x12 FZB
6	4	20404010	Hexagon countersunk 4x10 FZB
7	2	20406012	Hexagon countersunk 6x12 FZB
8	1	207825	Paw knife CC HSS110-62-40-4mm
9	2	207840	Slide Bearing GFM-1416-21
10	1	207974	Right Screen for paw blow
11	1	207982	Ball runner block size 15
12	1	207984	Ball guide rail size 15-95
13	1	210330	Cylinder RA/192032/M/20
14	2	210427	Lock nut MP150189_M10x1,25
15	2	215925	Straight connector Ï 6mm 1/8"
16	1	30231	Mountingplater for right pawknife rail
17	1	30238	Top for console, pawknife
18	1	30250	Bracket for pawknife
19	1	30251	Mountingpiece, right pawknife
20	1	30323	Assembly, branch for turning
21	1	30979	Protection strip for pawknife
22	1	31004	Warning Sign knives
23	2	82106000	Washer M6 FZB
24	4	M100889	Groove nut 6,5x64-M4

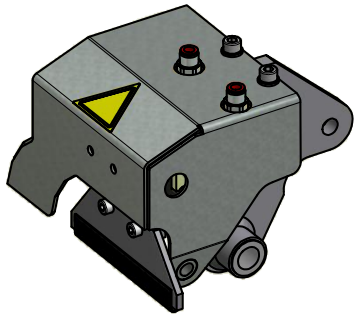

Break all edges
Alle kanter reifes

REVISION HISTORY			
REV	DESCRIPTION	DATE	APPROVED
B	Screws changed	2012-10-30	LL
C	Label added, paw holder removed	23-01-2013	MRH
D	Groove nut changed	06-01-2015	KL

This document is strictly confidential and must on no account be used or disclosed to third parties.
HEDENSTED GRUPPEN A/S

Hedensted Gruppen

Scale: 1:2	Ikke angivet tolerancer iht./ Not specificed tolerance according to: DS/ISO 2768-m		Konst./Designed:
	Overfl. beskaffenhed/Surface properties:		Tegnet/Drafted: KL
Part No.: 207973	Udfoldet iht./ Unfolding according to:	Material:	Date: 26-05-2010
Beskrivelse: Pawcut system_2010 - Right			
Description: Combi / Quick cut			
Sidst gemt af/Last saved by: KL	Sidst gemt/Last saved: 26-05-2010	Sheet size: A3	Sheet 1 / 2

Parts List			
ITEM	QTY	PART NUMBER	DESCRIPTION
11	1	30410	Shaft for hinge - pawholder
12	2	30420	Hinge for pawlock part f. arm
13	1	30593	Sensor plate for stretch
14	1	30594	Assembly pulbracket for pawholders
15	1	30598	Clamping plate for AT5
16	1	49605015	High Nut M5x15
17	4	82108000	Washer M8 FZB
18	2	10210020	Bolt unbraco cyl 10x20 FZB
19	2	82110000	Washer M10 FZB

Parts List			
ITEM	QTY	PART NUMBER	DESCRIPTION
1	2	10208020	Bolt.unbraco cyl 8x20 FZB
2	4	10208025	Bolt Unbrako Cyl. 8x25 FZB
3	4	10208030	Bolt Unbrako cyl. 8x30 FZB
4	1	11408060	Hexagon bolt m8x60 FZB
5	1	1508000	Nut M8 FZB
6	1	20405010	Hexagon countersunk head 5x10 FZB
7	2	207845	Slide Bearing GFM-2023-21
8	1	222300	Ball runner block size 25
9	1	30367	Left arm for pawholder
10	2	30400	Hinge for pawlock

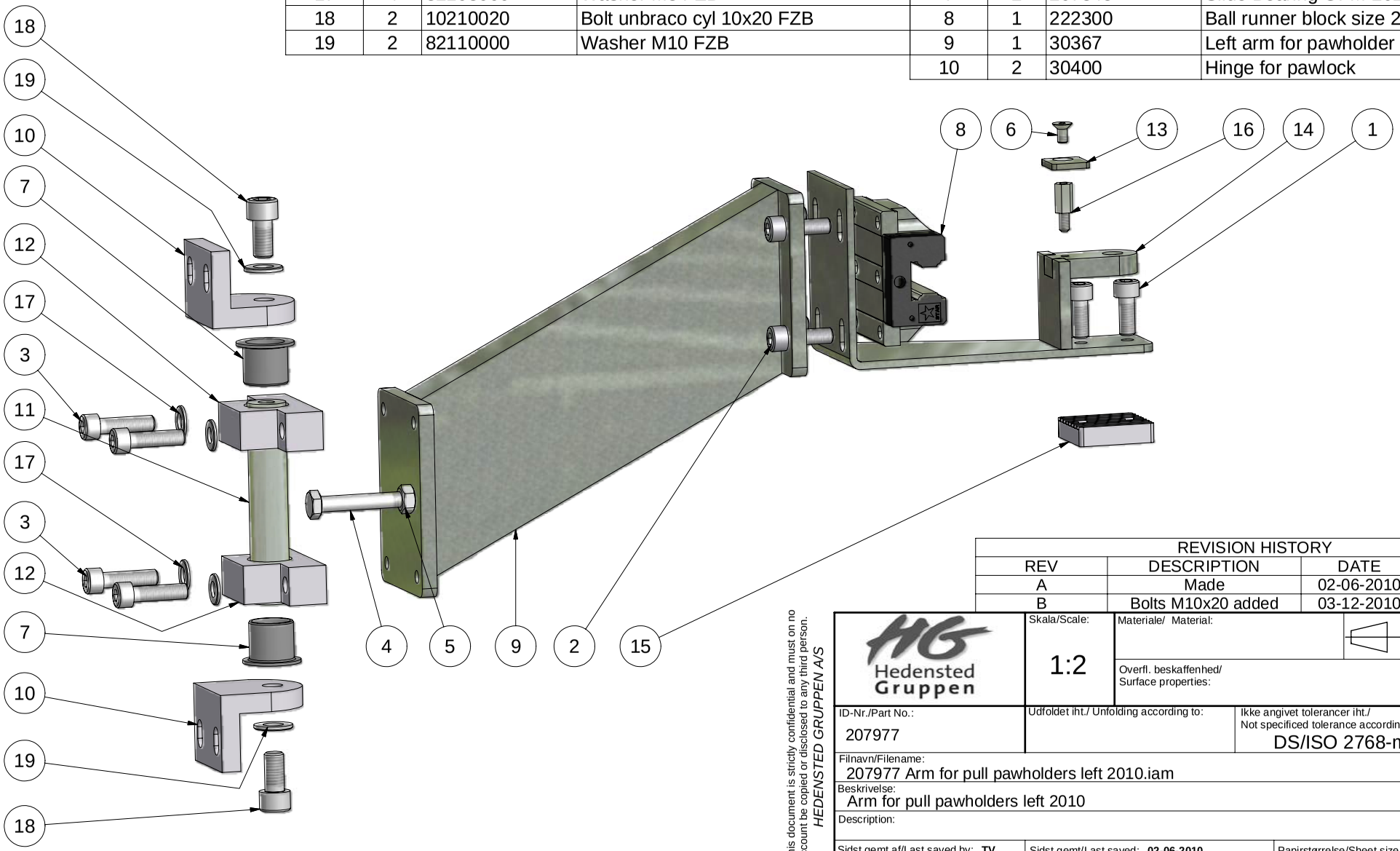

REVISION HISTORY			
REV	DESCRIPTION	DATE	APPROVED
A	Made	02-06-2010	KC
B	Bolts M10x20 added	03-12-2010	KC

Hedensted Gruppen

Skala/Scale: 1:2

Materiale/ Material:

Vægt/Weight: 3,75 kg

Overfl. beskaffenhed/ Surface properties:

Konst./Designed: TV

ID-Nr./Part No.: 207977

Udfoldet iht./ Unfolding according to:

Ikke angivet tolerancer iht./ Not specificed tolerance according to: DS/ISO 2768-m

Tegnet/Drafted: Thomas Vittrup

Filnavn/Filename: 207977 Arm for pull pawholders left 2010.iam

Dato/Date: 02-06-2010

Beskrivelse: Arm for pull pawholders left 2010

Description:

Sidst gemt af/Last saved by: **TV**

Sidst gemt/Last saved: **02-06-2010**

Papirstørrelse/Sheet size: A3

sheet 1 of 2

This document is strictly confidential and must on no account be copied or disclosed to any third person.
HEDENSTED GRUPPEN A/S

Parts List			
ITEM	QTY	PART NUMBER	DESCRIPTION
1	1	11408020	Hexagon bolt m8x20 FZB
2	1	197002	Axle joint alu star 1058-030-00
3	1	20206012	Fitting bolt M6-8x12mm
4	2	20410020	Hexagon countersunk head 10x20 FZB
5	1	207896	Tube for contact
6	1	207897	Brace for contact
7	1	207991	Brace for foot pedal
8	1	207992	Safty brace for knee pedal

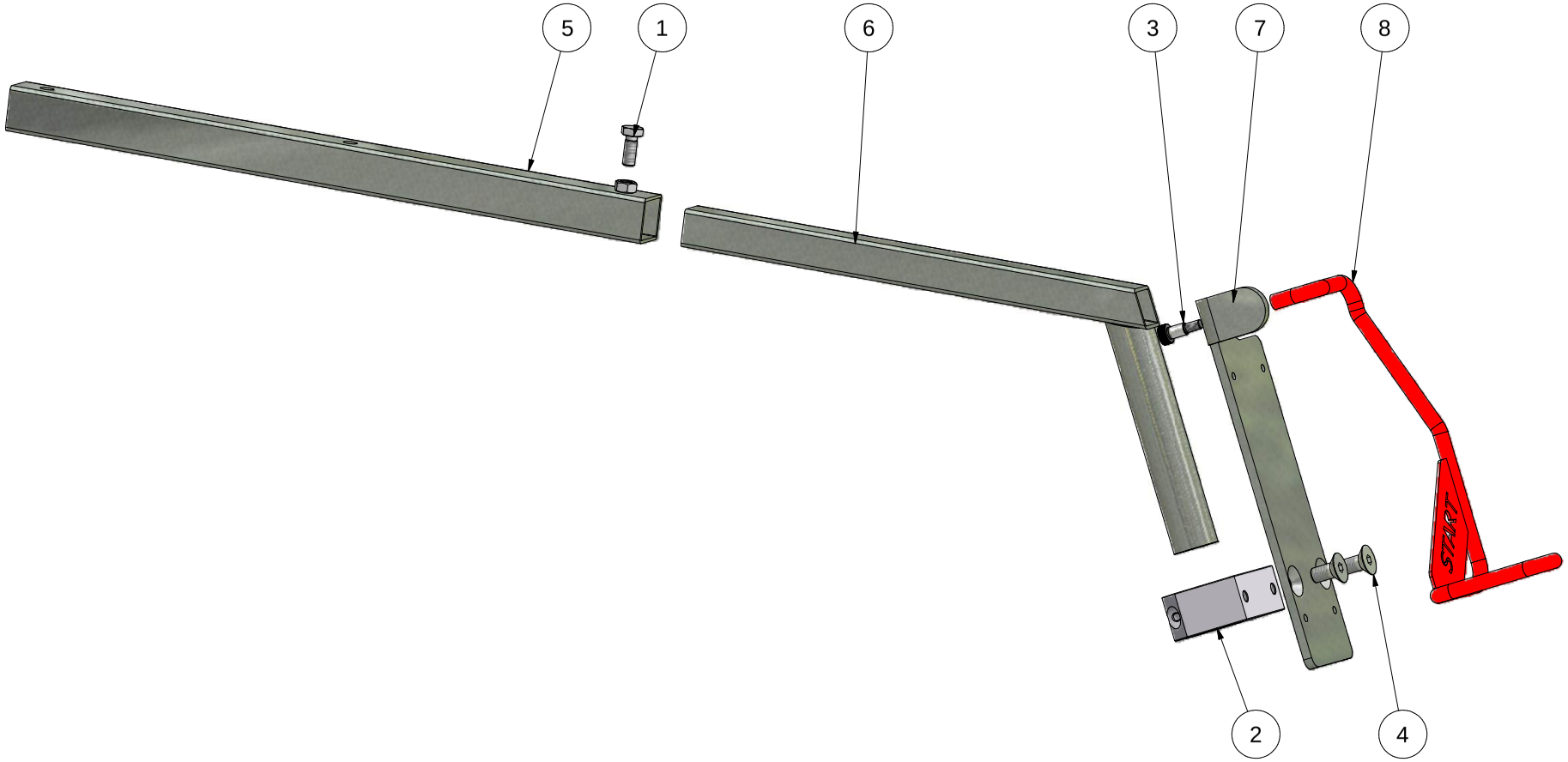

Alle kanter reifes
Breake all edges

REVISION HISTORY			
REV	DESCRIPTION	DATE	APPROVED
A	Made	03-06-2010	
B	Brace for foot pedal updated	16-06-2011	KC

This document is strictly confidential and must on no account be copied or used in any other way than for HEDENSTED GRUPPEN A/S

Hedensted Gruppen

Scale:

Ikke angivet tolerancer iht./ Not specificed tolerance according to: DS/ISO 2768-m

Overfl. beskaffenhed/Surface properties:

Konst./Designed:

Tegnet/Drafted:

Part No.: 207979

Udfoldet iht./Unfolding according to:

Material:

Date: 03-01-2008

Description: Plate for knee pedal complete 2010

Description:

Sidst gemt af/Last saved by: KC

Sidst gemt/Last saved: 03-06-2010

Sheet size: A3

Sheet 1 / 1

PARTS LIST			
ITEM	QTY	PART NUMBER	DESCRIPTION
1	4	10206020	Bolt unbraco cyl 6x20 FZB
2	1	212110	Cylinder PRA/182032/M/320
3	1	214115	F-Joint QM-8025-25
4	1	214158	L-Joint QA-8032-24
5	1	215655	Banjo flow control -IN- Ï 6 1-8
6	1	215760	Swirvel elbow Ï 6mm 1/8"

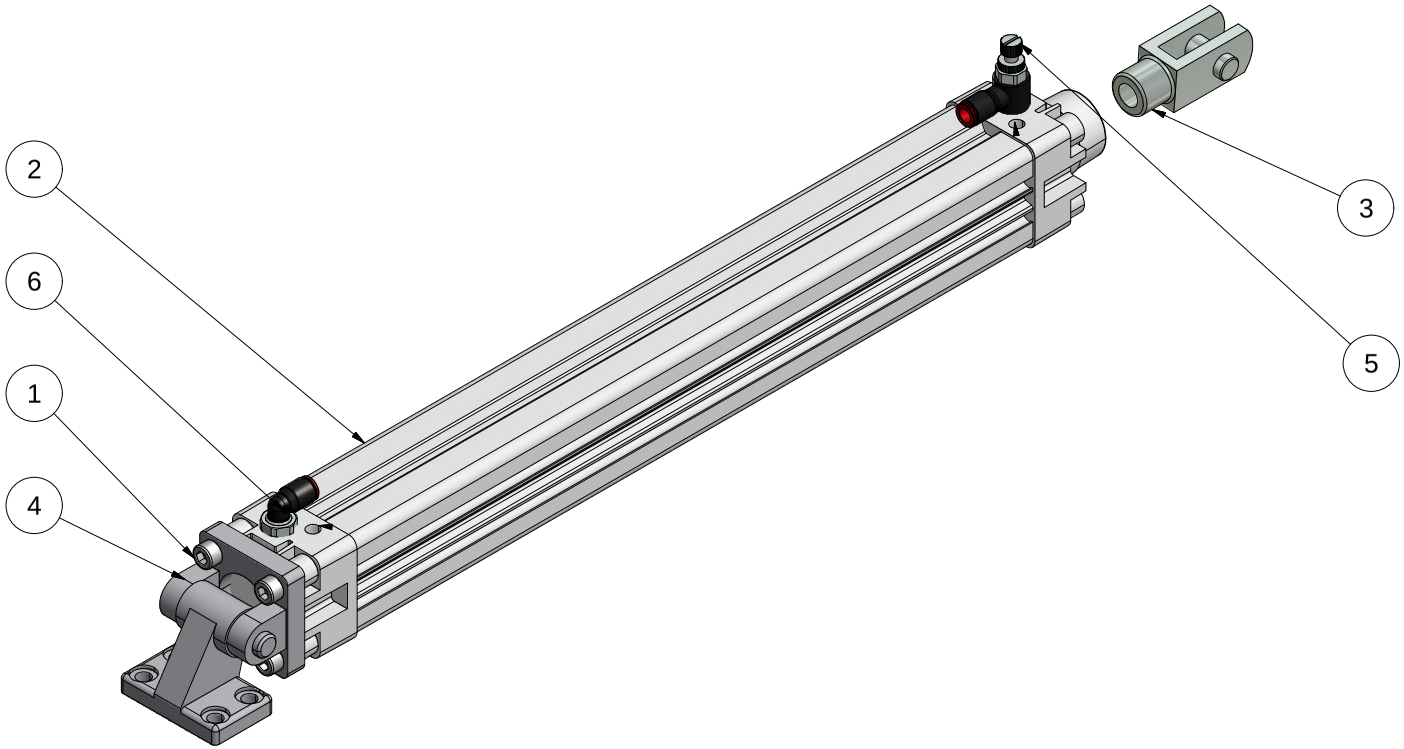

Alle kanter reifes
Breake all edges

REV	DESCRIPTION	DATE	APPROVED
A	New drawing	07-03-2012	LL
B	Components changed	21-12-2012	MRH
C	Flow adjustment added	03-04-2013	MRH

REVISION HISTORY

The drawing is strictly confidential and may no longer be copied or disclosed to any third parties.
HEDENSTED GRUPPEN A/S

Hedensted Gruppen

Scale: 1 : 2

Ikke angivet tolerancer iht./ Not specificed tolerance according to: DS/ISO 2768-m

Sheet size: A3

Overfl. beskaffenhed/Surface properties: No

Sheet: 1 /1

Part No.: 210179

Material:

Description: Cylinder for paw stretch

Description:

Parts List			
ITEM	QTY	PART NUMBER	DESCRIPTION
1	2	10203008	Bolt Unbraco cyl 3x08 FZB
2	3	10205020	Bolt unbrako cyl 5x20 FZB
3	1	10506010	Stop screw 6x10 mm black
4	4	20406012	Hexagon countersunk 6x12 FZB
5	1	207956	Encoder Type 8.5020.C922.0500
6	1	207957	Cable with plug 5 mtr
7	1	30171	Shaft for encoder
8	1	30174	Mounting plate for AT5 pulley
9	1	30260	Pulley AT5-Z48
10	1	30261	Hub for encoder
11	1	30269	Mountingplate for AT5 pulley fixed end
12	1	30300	Flange for AT5 pulley
13	1	473038	Bearing 6204 2 RS1
14	2	82103000	Washer M3 FZB
15	3	82105900	Washer M5 FZB
16	1	89720000	Seeger ring for shaft Ï 20 din 471
17	1	89847000	Seeger ring for bore Ï 47 din 472

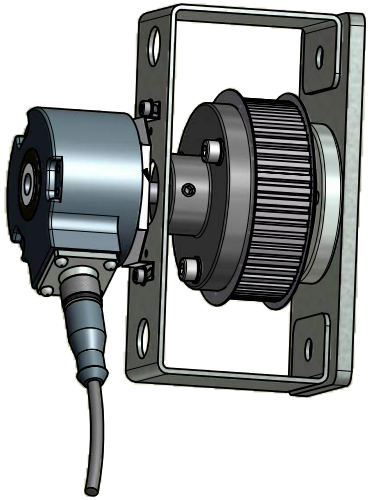

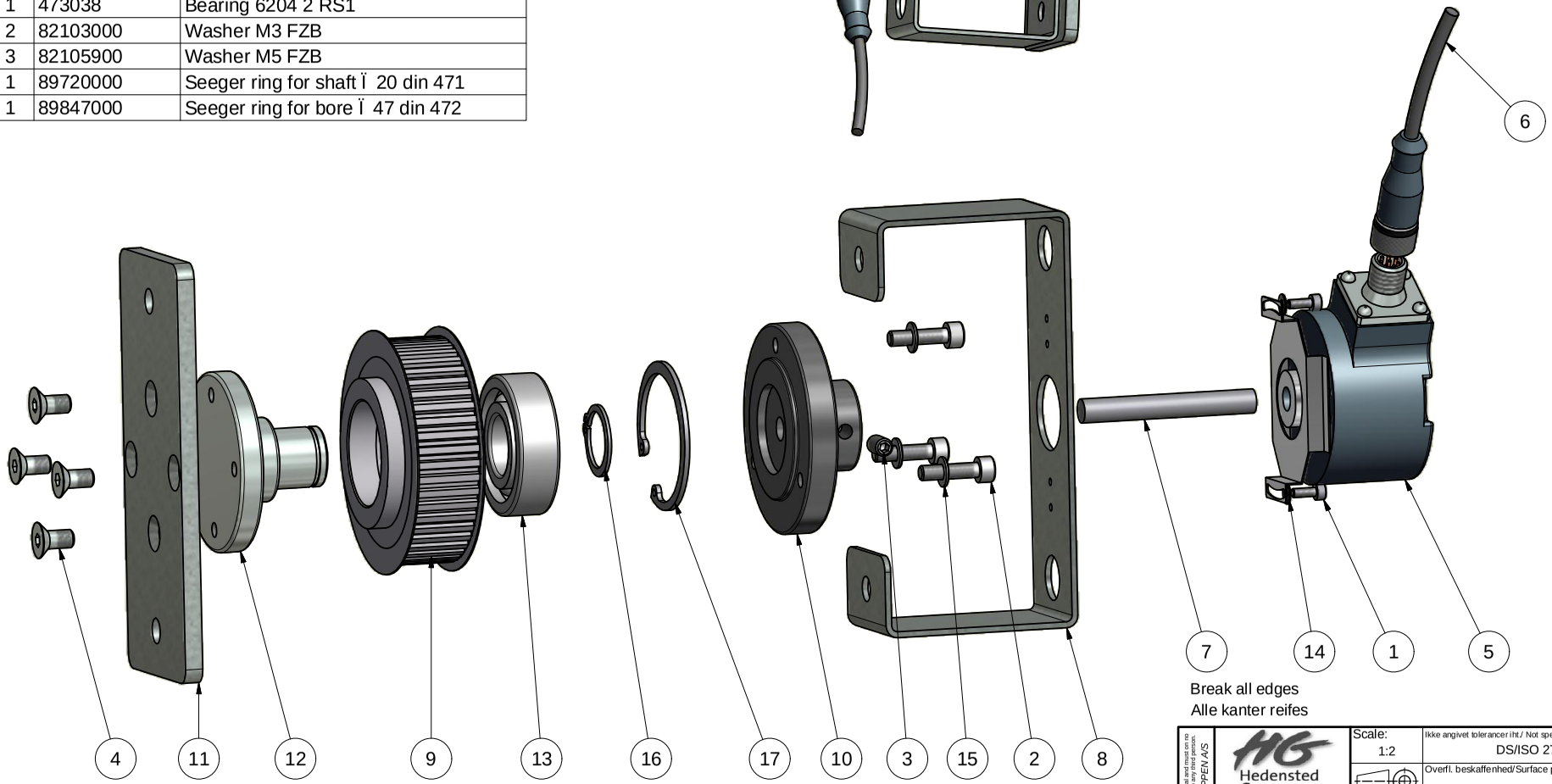

Break all edges
Alle kanter reifes

REVISION HISTORY			
REV	DESCRIPTION	DATE	APPROVED
A	New drawing	06-03-2007	KL
B	Cabel added	06-02-2013	MRH

This document is strictly confidential and must on no account be used or disclosed without permission.
HEDENSTED GRUPPEN A/S

Hedensted Gruppen

Scale: 1:2	Ikke angivet tolerancer iht./ Not specificed tolerance according to: DS/ISO 2768-m		Konst./Designed:
	Overfl. beskaffenhed/Surface properties:		Tegnet/Drafted: KL
Part No.: 30262	Udfoldet iht./ Unfolding according to:	Material:	Date: 14-05-2004
Beskrivelse: Assembly AT5 pulley fixed end			
Description: Combi / Quick cut			
Sidst gemt af/Last saved by:	Sidst gemt/Last saved: 06-03-2007	Sheet size: A3	Sheet 1 / 1

Parts List			
ITEM	QTY	PART NUMBER	DESCRIPTION
1	4	20406012	Hexagon countersunk head 6x12 FZB
2	1	30260	Pulley AT5-Z48
3	1	30275	Mounting plate fot AT5 pulley
4	1	30300	Flange for AT5 pulley
5	1	473038	Bearing 6204 2 RS1
6	1	89720000	Seeger ring for shaft Ø20 din 471
7	1	89847000	Seeger ring for bore Ø47 din 472

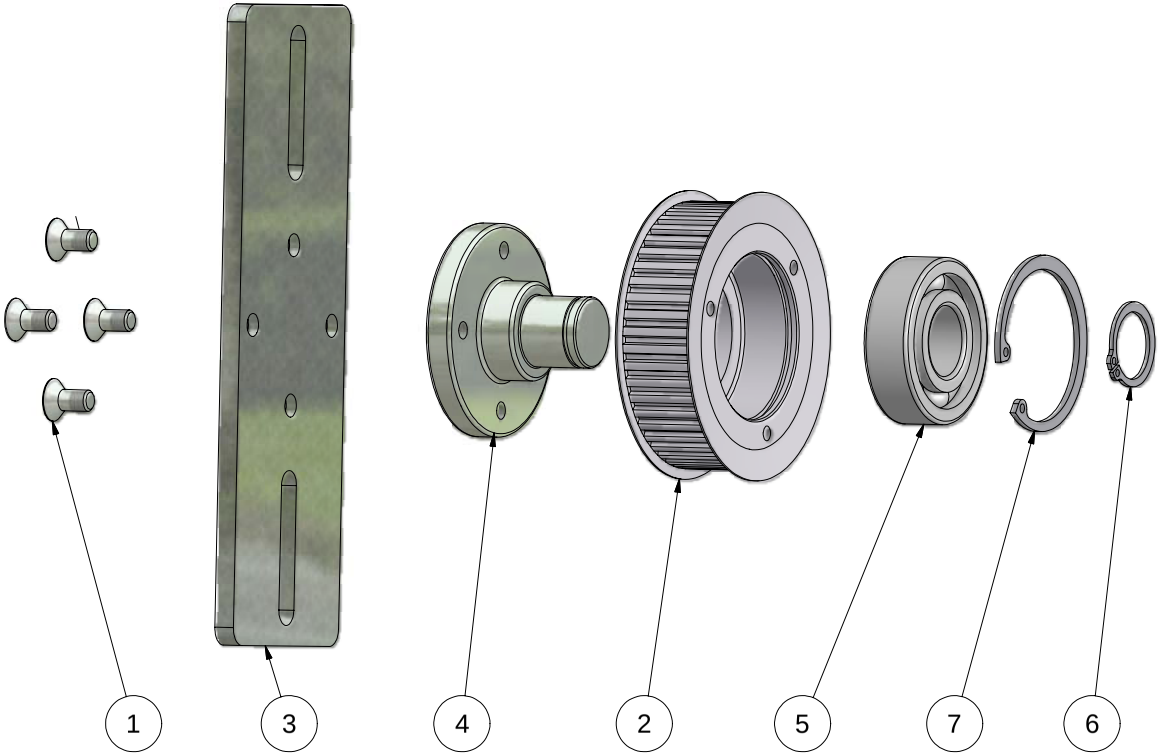

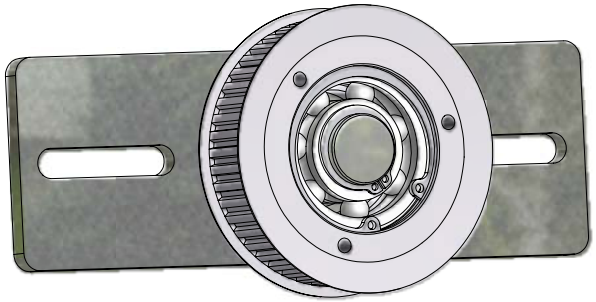

REVISION HISTORY			
REV	DESCRIPTION	DATE	APPROVED
A	New drawing	14-04-2005	KL
B	Name changed	06-05-2010	KL

This document is strictly confidential and must on no account be copied or disclosed to any third person.
HEDENSTED GRUPPEN A/S

HEDENSTED GRUPPEN

Skala/Scale: 1:1	Materiale/ Material:		Vægt/Weight: kg
	Overfl. beskaffenhed/ Surface properties:		Konst./Designed: *TV*
ID-Nr./Part No.: 30263	Udfoldet iht./ Unfolding according to:	Ikke angivet tolerancer iht./ Not specificed tolerance according to: DS/ISO 2768-m	Tegnet/Drafted: *Thomas Vittrup*
Filnavn/Filename: 30263 Assembly pulley AT5.iam			Dato/Date: 14-05-2004
Beskrivelse: Assembly pulley AT5			
Description: Combi / Quick cut			
Sidst gemt af/Last saved by: **TV**	Sidst gemt/Last saved: **17-05-2004**	Papirstørrelse/Sheet size: A3	sheet 1 of 1

Parts List			
ITEM	QTY	PART NUMBER	DESCRIPTION
1	1	30585	Pulley AT5-32
2	1	30805	Mounting plate for AT5 pulley
3	1	30590	Flange for pulley AT5-32
4	1	89832000	Seeger ring for bore Ø32 din 472
5	1	89715000	Seeger ring for shaft Ø15 din 471
6	1	473014	Bearing 6002 2 RS1
7	4	20406020	Hexagon countersunk head 6x20 FZB

A-A (1 : 1)

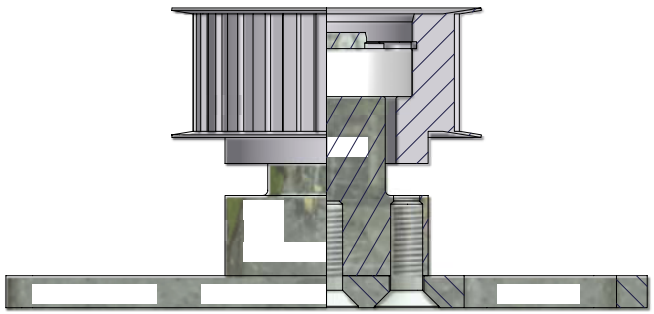

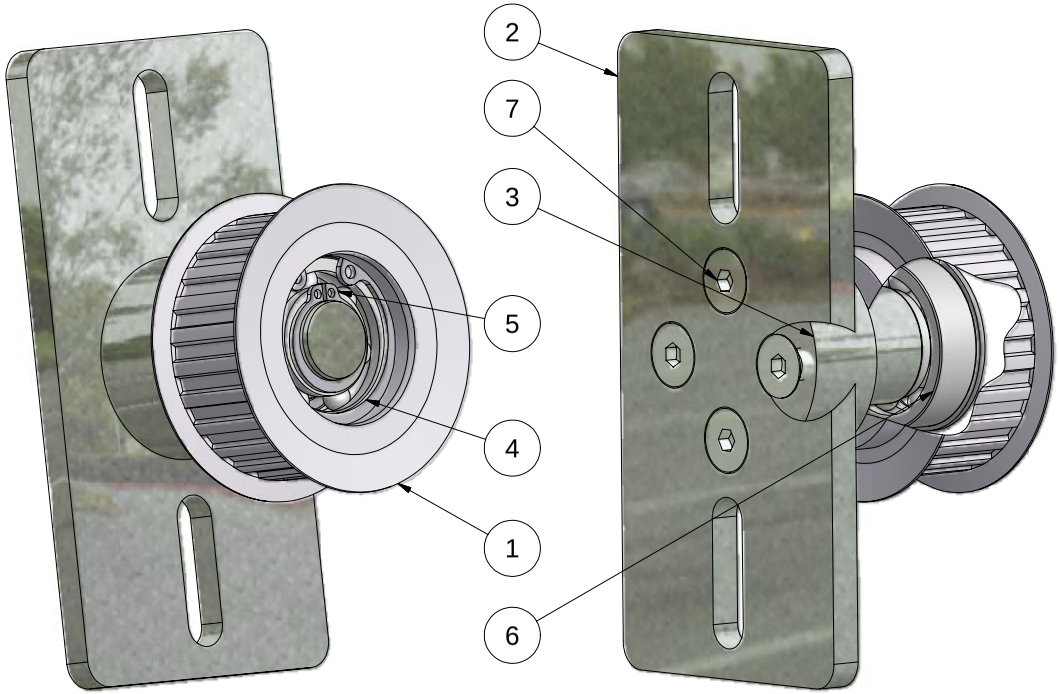

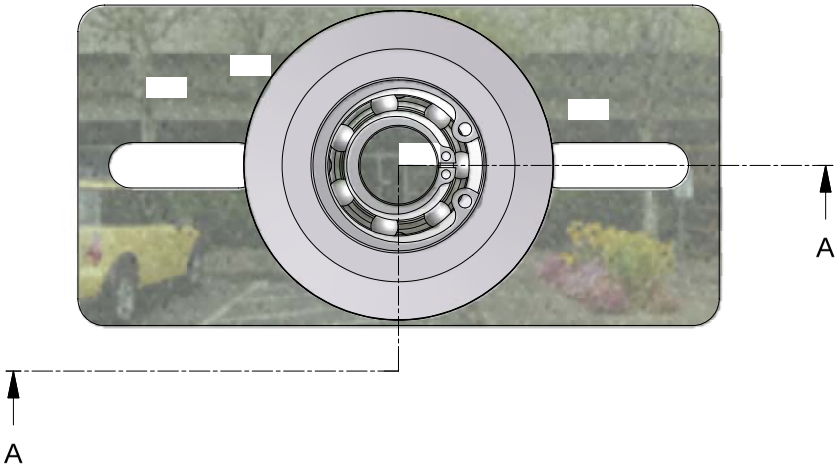

Break all edges
Alle kanter reifes

REVISION HISTORY			
REV	DESCRIPTION	DATE	APPROVED
A	Made	19-04-2005	KL
B	Renamed Locking added	05-05-2010	KC

This document is strictly confidential and must on no account be copied or disclosed to any third person.
HEDENSTED GRUPPEN A/S

Hedensted Gruppen

Scale: 1:1	Ikke angivet tolerancer ihf./ Not specified tolerance according to: DS/ISO 2768-m		Konst./Designed: KL
	Overfl. beskaffenhed/Surface properties:		Tegnet/Drafted: KL
Part No.: 30586	Udfoldet ihf./ Unfolding according to:	Material:	Date: 16-05-2004
Beskrivelse: Assembly AT5 -32 pulley			
Description: Assembly AT5-32 pulley			
Sidst gemt af/Last saved by: KL	Sidst gemt/Last saved: 19-04-2005	Sheet size: A3	Sheet 1 / 1

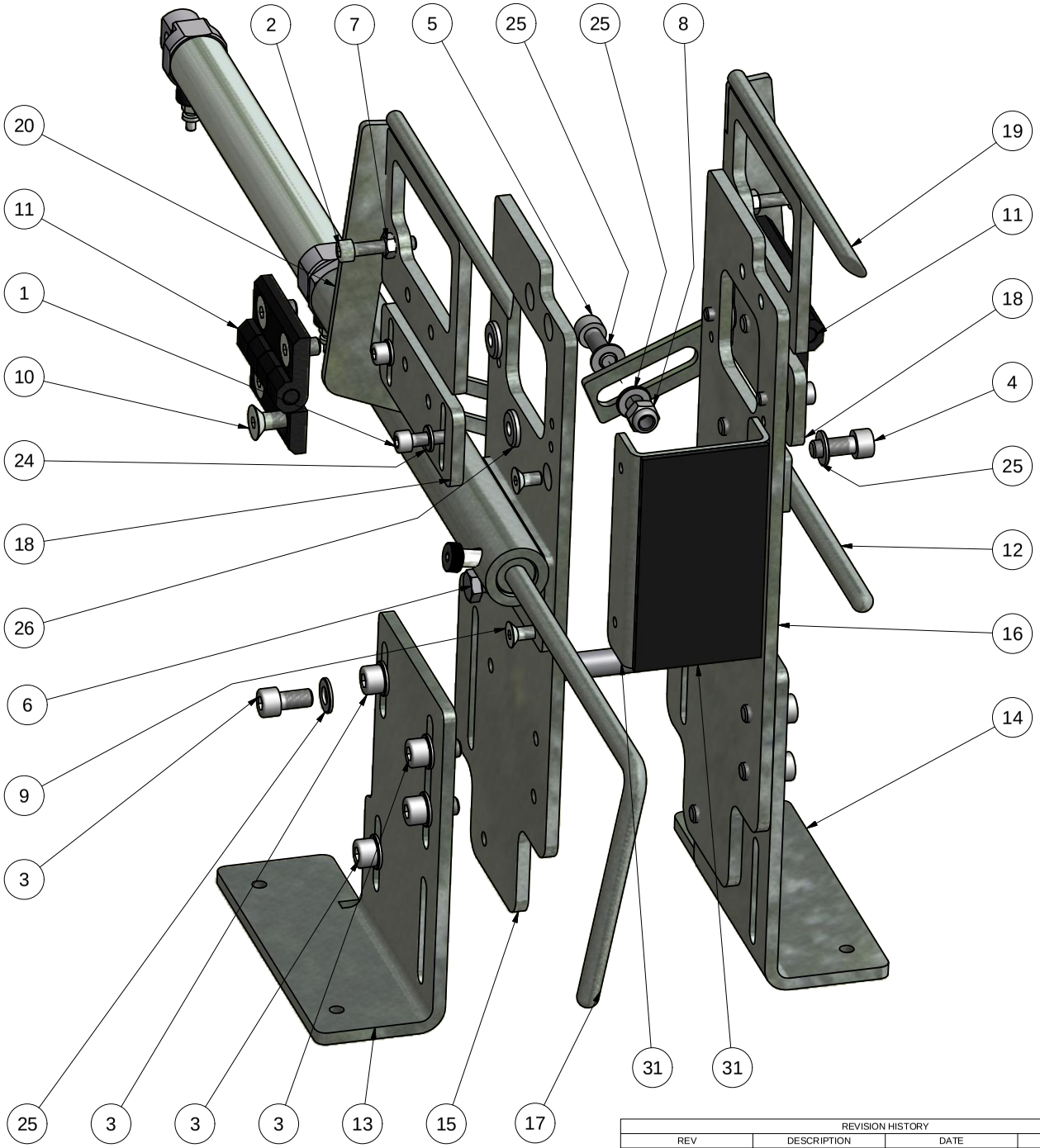

Parts List			
ITEM	QTY	PART NUMBER	DESCRIPTION
1	4	10206020	Bolt unbraco cyl 6x20 FZB
2	2	10206030	Bolt Unbraco cyl 6x30 FZB
3	10	10208016	Bolt.unbraco cyl 8x16 FZB
4	2	10208020	Bolt.unbraco cyl 8x20 FZB
5	1	10208025	Bolt Unbrako Cyl. 8x25 FZB
6	2	11408016	Hexagon bolt M8x16 FZB
7	2	1506000	Nut M6 FZB
8	1	17908000	Self-locking nut M8 FZB
9	4	20406012	Hexagon countersunk 6x12 FZB
10	8	20408016	Hexagon countersunk 8x16 FZB
11	2	207940	Hinge GN237-60-60
12	1	30702	Stop axle complete
13	1	30705	Body holder for outer plate
14	1	30706	Body holder for outer plate
15	1	30710	Body holder for inner plate
16	1	30711	Body holder for inner plate
17	1	30718	Assembly bodyholder QC
18	2	30740	Lower plate for tigh-support
19	1	30756	Assembly tigh-support right
20	1	30757	Assembly tigh-support left
21	1	30760	Axle for cylinder Ï 32
31	1	30768	Plate for bodyholder w. rubber
24	4	82106000	Washer M6 FZB
25	16	82108000	Washer M8 FZB
26	4	87606000	Washer ß6,5x16,5x3 FZB

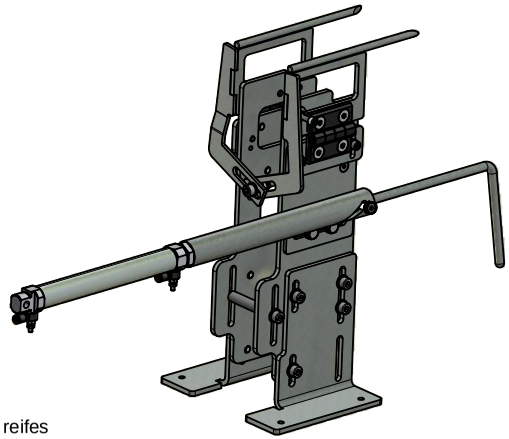

Alle kanter reifes

REVISION HISTORY			
REV	DESCRIPTION	DATE	APPROVED
B	Renamed	01-02-2013	MRH
C	Bodyholder added	16-04-2014	KL
D	30765 changed to 30768	10-06-2014	KL

This document is strictly confidential and must on no account be used or disclosed without permission. HEDENSTED GRUPPEN A/S

Hedensted Gruppen

Scale: 1:2	Ikke angivet tolerancer iht./ Not specificed tolerance according to: DS/ISO 2768-m		Konst./Designed: KL
	Overfl. beskaffenhed/Surface properties:		Tegnet/Drafted:
Part No.: 30837	Udfoldet iht./ Unfolding according to:	Material:	Date: 14-05-2004
Beskrivelse: Bodyholder for quick cut			
Description:			
Sidst gemt af/Last saved by: KL	Sidst gemt/Last saved: 30-03-2006	Sheet size: A3	Sheet 1 / 2

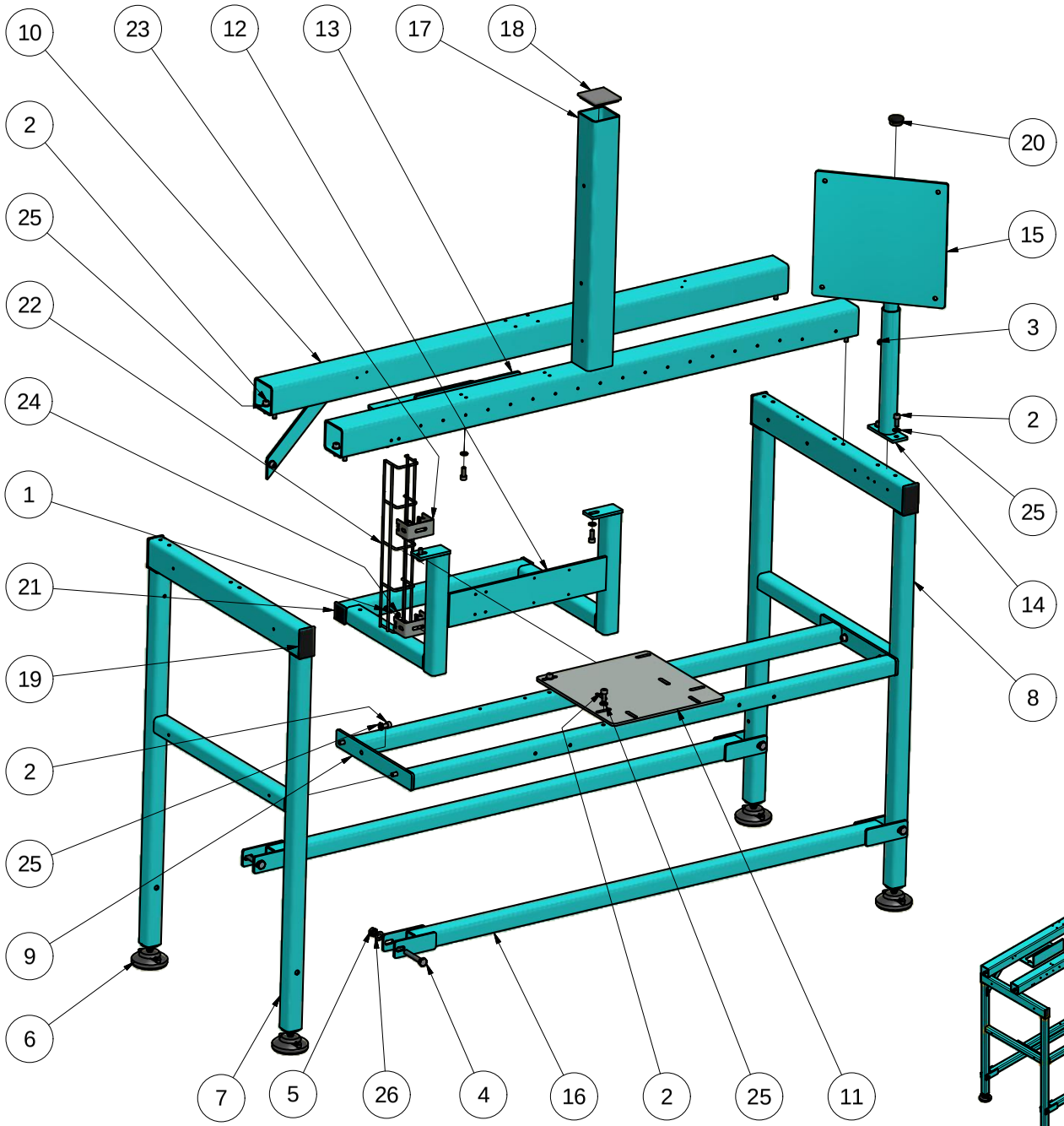

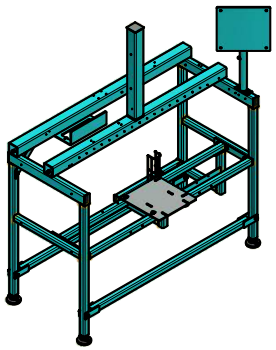

Parts List

ITEM	QTY	PART NUMBER	DESCRIPTION
1	2	10206016	Bolt. unbraco cyl 6x16 FZB
2	24	10208020	Bolt.unbraco cyl 8x20 FZB
3	1	11406020	Hexagon bolt M6x20 FZB
4	4	11410065	Hexagon bolt M10x65 FZB
5	4	1510000	Nut M10 FZB
6	4	197350	Machine base M75-12-070
7	1	30112	Assembly right gable
8	1	30113	Assambly left gable
9	1	30121	Assembly central frame
10	1	30127	Back cross rail with reinforcement
11	1	30132	Mountingplate for bodygribsystem
12	1	30164	Assembly, support controlbox
13	1	30167	Mountingplate for valves
14	1	30210	Assembly for controlbox
15	1	30212	Assembly, plate for controlbox
16	2	30815	Bracket for transport
17	1	30892	Vertical member for frame
18	1	30970	End cap 70x70mm
19	4	30975	End cap 70x40mm
20	1	30978	End cap Ï 28mm
21	1	30980	End cap 40x40mm
22	0,40 m	600440	Cable duct metal CF 54-50
23	2	600445	U-bracket UC 50-G
24	2	82106000	Washer M6 FZB
25	24	82108000	Washer M8 FZB
26	4	82110000	Washer M10 FZB

Alle kanter reifes

REVISION HISTORY

REV	DESCRIPTION	DATE	APPROVED
A	New drawing	20-12-2010	KL
B	U brackets added	21-01-2013	MRH

This document is strictly confidential and must on no account be used or copied without the permission of HEDENSTED GRUPPEN A/S

Hedensted Gruppen

Scale: 1:10	Ikke angivet tolerancer iht./ Not specificed tolerance according to: DS/ISO 2768-m		Konst./Designed:
	Overfl. beskaffenhed/Surface properties:		Tegnet/Drafted: kl
Part No.: 30890	Udfoldet iht./ Unfolding according to:	Material:	Date: 2006-03-29
Beskrivelse: Frame for Quick Cut			
Description:			
Sidst gemt af/Last saved by: KL	Sidst gemt/Last saved: 2006-03-30	Sheet size: A3	Sheet 1 / 2

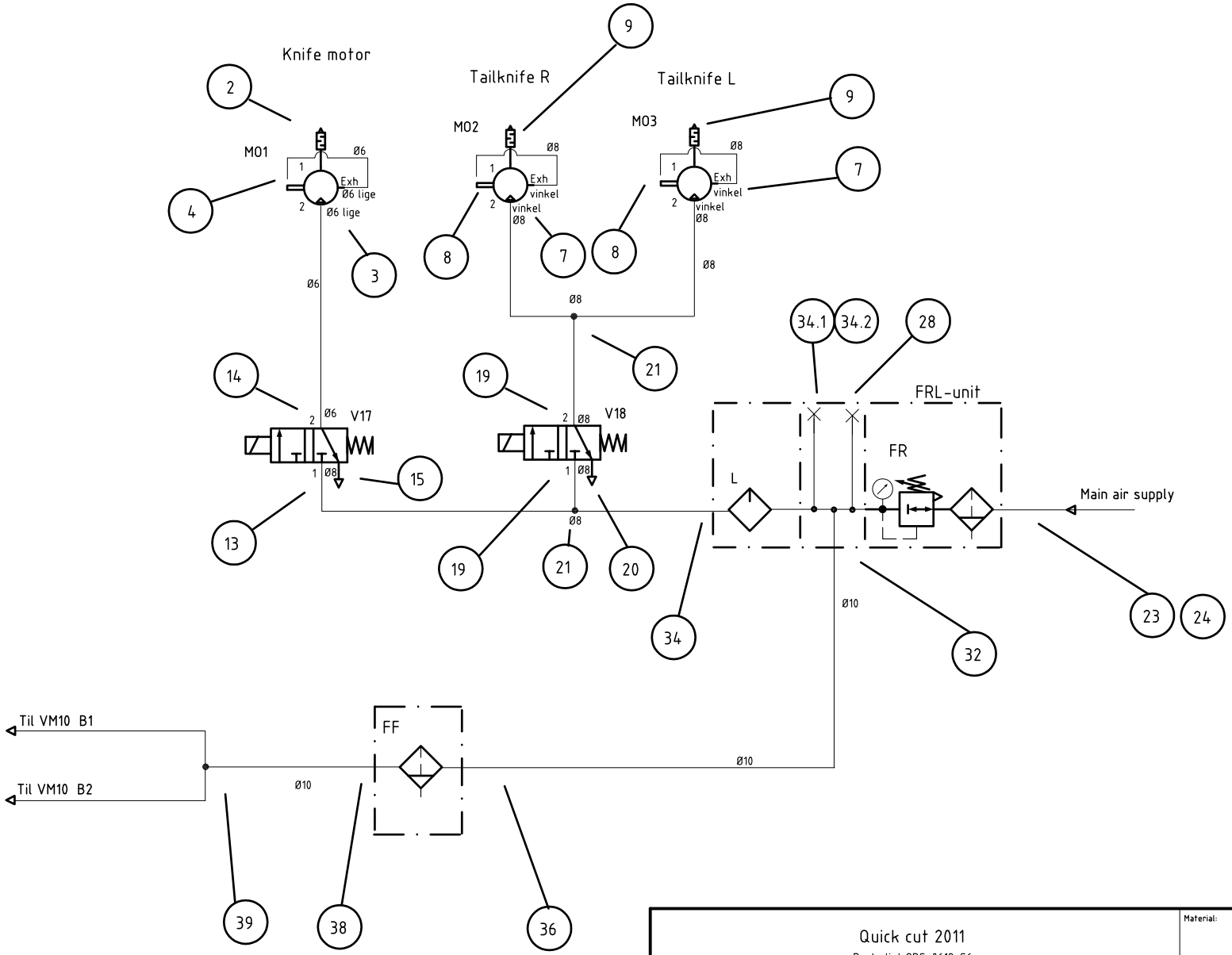

Quick cut 2011

Parts list ODS-0618-S6

Material:	Scale:	First angel	
Drawn by: MEK		Date: 23.04.2015	
Drawing no.: ODS-0618-35714-A6			
Supersedes:			

NORGREN
VESTERLUNDVEJ 18 2730 HERLEV +45 44914166
HVIDKÆRVEJ 31A 5250 ODENSE SV +45 66139333

- et selskab i IMI plc IMI

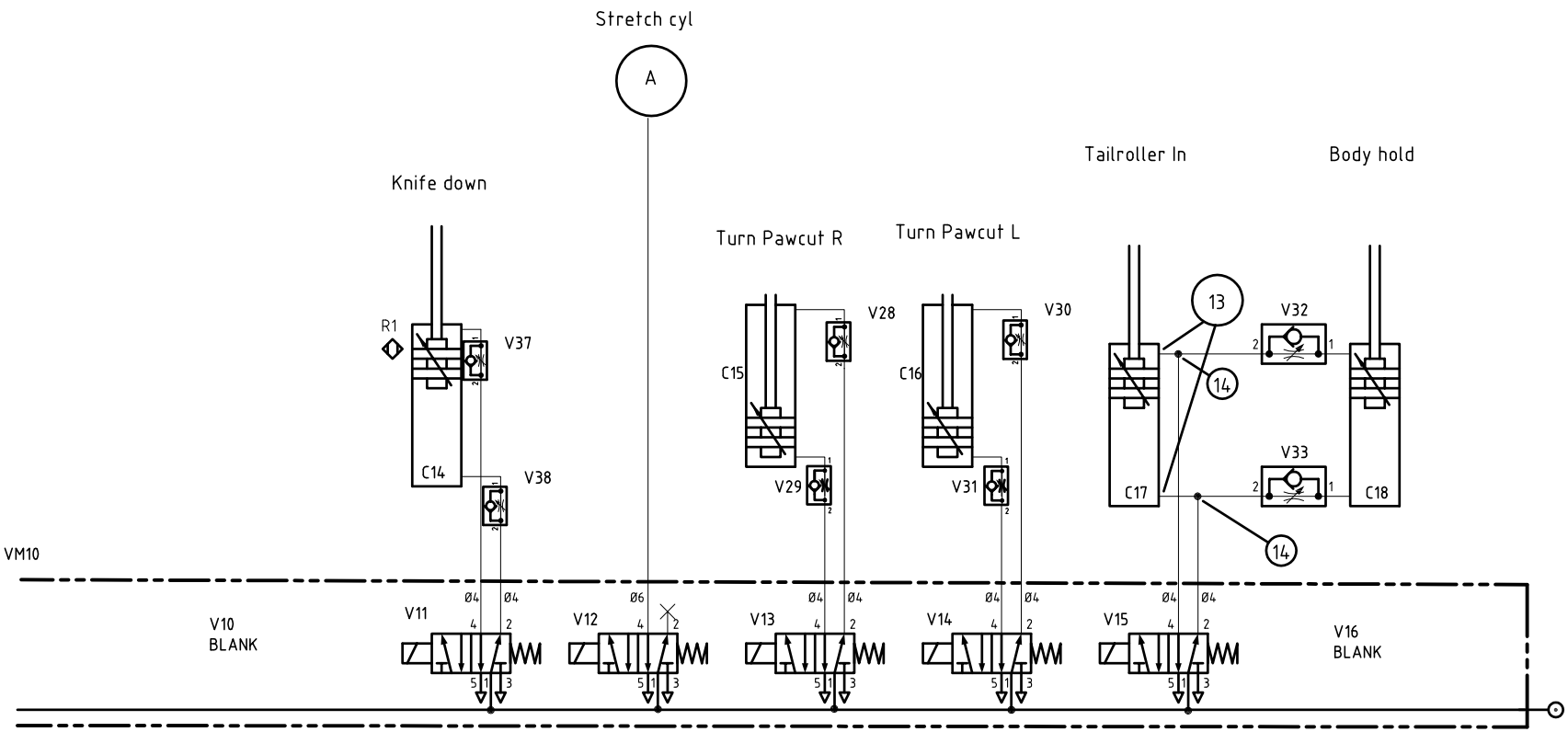

Quick cut 2011

Parts list ODS-0618-S5

Material:	Scale:	First angel	
Drawn by: MEK		Date: 16.04.2014	
Drawing no.: ODS-0618-35714-A5			
Supersedes:			

NORGREN
VESTERLUNDVEJ 18 2730 HERLEV +45 44914166
HVIDKÆRVEJ 31A 5250 ODENSE SV +45 66139333

- et selskab i IMI plc IMI

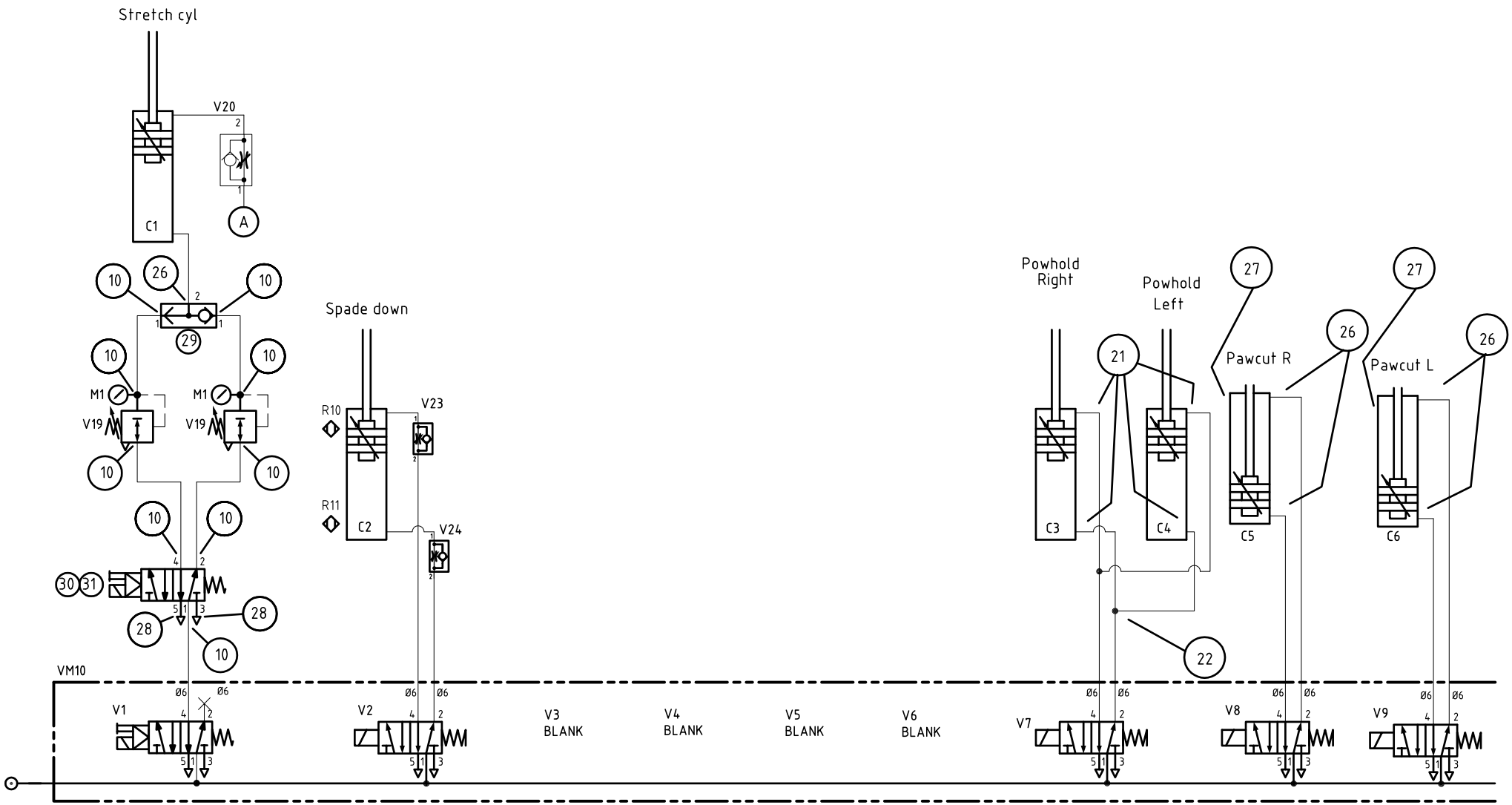

Quick cut 2011

Parts list ODS-0618-S4

Material:	Scale:	First angel	
Drawn by: MEK		Date: 16.04.2014	
Drawing no.: ODS-0618-35714-A4			
Supersedes:			

NORGREN
VESTERLUNDVEJ 18 2730 HERLEV +45 44914166
HVIDKÆRVEJ 31A 5250 ODENSE SV +45 66139333

- et selskab i IMI plc IMI

NORGREN

		Hedensted Gruppen A/S		
Drawing no.		ODS-0618-35314-A4		Date: 20-05-2014
Parts of list		ODS-0618-S4		Design: Bjarne Stærkær
Drawing		Quick Cut 2011		A4-10839
Item	No.	Descreption		Norgren Ident. no.
1	1	Cyl	C1	PRA/182032/M/320
2	1	F-Mounting		QM/8025/25
3	1	L-Mounting		QA/8032/24
4	1	Swivel		C02470618
5	1	Banjo flow control	V20	C0L510618
6				
7	2	Valve	V19	R07-100-RNEG
8	2	Bracket		M/P71273/3
9	2	Gauge	M1	18-013-011
10	9	Swivel		C02470618
11	2	Mounting nut		2962-04
12				
13	1	Cyl	C2	PRA/182040/M/500
14	1	F-Mounting		QM/8040/25
15	1	L-Mounting		QA/8040/24
16	2	Banjo flow control	V23-V24	C0K510628
17				
18	2	Cyl	C3-C4	RA/192032/M/25
19	2	F Mounting		QM/8025/25
20	2	Nut		M/P1501/89
21	4	Swivel		C02470618
22	2	Swivel Y adaptor		C00820600
23				
24	2	Cyl	C5-C6	RA/192032/M/20
25	4	Nut		M/P1501/89
26	5	Straight adaptor		C02250618
27	16	Mounting brace		M/P72816
28	2	1/8" silencer		T40C1800
29	1	1/8" switch valve	V25	T65C1800
30	1	1/8" solenoid 5/2 valve	V26	V60A513A-A313J
31	1	socket 22mm		M/P43313/3

NORGREN

		Hedensted Gruppen A/S		
Drawing no.		ODS-0618-35314-A5		Date: 20-05-2014
Parts of list		ODS-0618-S5		Design: Bjarne Stærkær
Drawing		Quick Cut 2011		A4-10839
Item	No.	Descreption		Norgren Ident. no.
1	1	Cyl	C14	RA/192020/M/25
2	1	Nut		M/P1501/60
3	2	Banjo flow control	V37-V38	C0K510405
4				
5	2	Cyl	C15-16	RA/192032/M/80
6	2	F-Mounting		QM/8025/25
7	2	Nut		M/P1501/89
8	4	Banjo flow control	V28-V31	C0K510418
9				
10	1	Cyl	C17	RA/192025/M/25
11	1	F-Mounting		QM/8020/25
12	1	Nut		M/P1501/60
13	2	Swivel		C02470405
14	2	y-connector		C00820400
15				
16	1	Cyl	C18	RM/8026/M/160
17	2	Banjo flow control	V32-V33	C0K510418

NORGREN

		Hedensted Gruppen A/S	
Drawing no.		ODS-0618-35314-A6	Date: 23-04-2015
Parts of list		ODS-0618-S6	Design: Bjarne Stærkær
Drawing		Quick Cut 2011	A4-10839
Item	No.	Descreption	Norgren Ident. no.
1	1	Air Motor M01	LZB22A049-55
2	1	Silencer	T40C1800
3	2	Straight adaptor	C02250618
4	1	Straight union	C00200600
5			
6	2	Air Motor M02-M03	LZB22A049-55
7	4	Swivel	C02470818
8	2	Swivel	C02470828
9	2	Silencer	T40C1800
10			
11	1	Valve V17	V60A413A-A313J
12	1	Connector	M/P43313/3
13	1	Swivel	C02470818
14	1	Swivel	C02470618
15	1	Silencer	T40C1800
16			
17	1	Valve V18	V61B413A-A313J
18	1	Connector	M/P43313/3
19	2	Swivel	C02470828
20	1	Silencer	T40C2800
21	2	Swivel Y adaptor	C00820800
22			
23	1	Plug Male	234110028
24	1	Adaptor	4215-08
25	1	Filterregulator FR	B72G-2GK-AL3-RMN
26	1	Tamper resistant	4255-51
27	1	Gauge	18-013-989
28	2	Plug Male	160050028
29	2	Quikclamp and Wall mount	4214-52
30	1	Quikclamp	4214-51
31	1	Porting blok	4216-52
32	1	Straight adaptor	C02251028
33	1	Lubricator	L72M-2GP-ETN
34	1	Swivel	C02470828
34,1	1	Elbow male 1/4" female 1/4"	150430028
34,2	1	Quick Coupling female 1/4"	40208
35			
36	1	Swivel	C02471038
37	1	Oil removal filter FF	F73C-3GD-AT0
38	1	Swivel	C02471038
39	1	Union Tee	C00601000
40	1	wall mounting bracket	4424-50
41			
42	1	Valve V1-V16	VM101603619
43	2	Plug Ø6	110040600
44	1	Cabel 3 m D Sub 90gr.	V12088-E03
45			

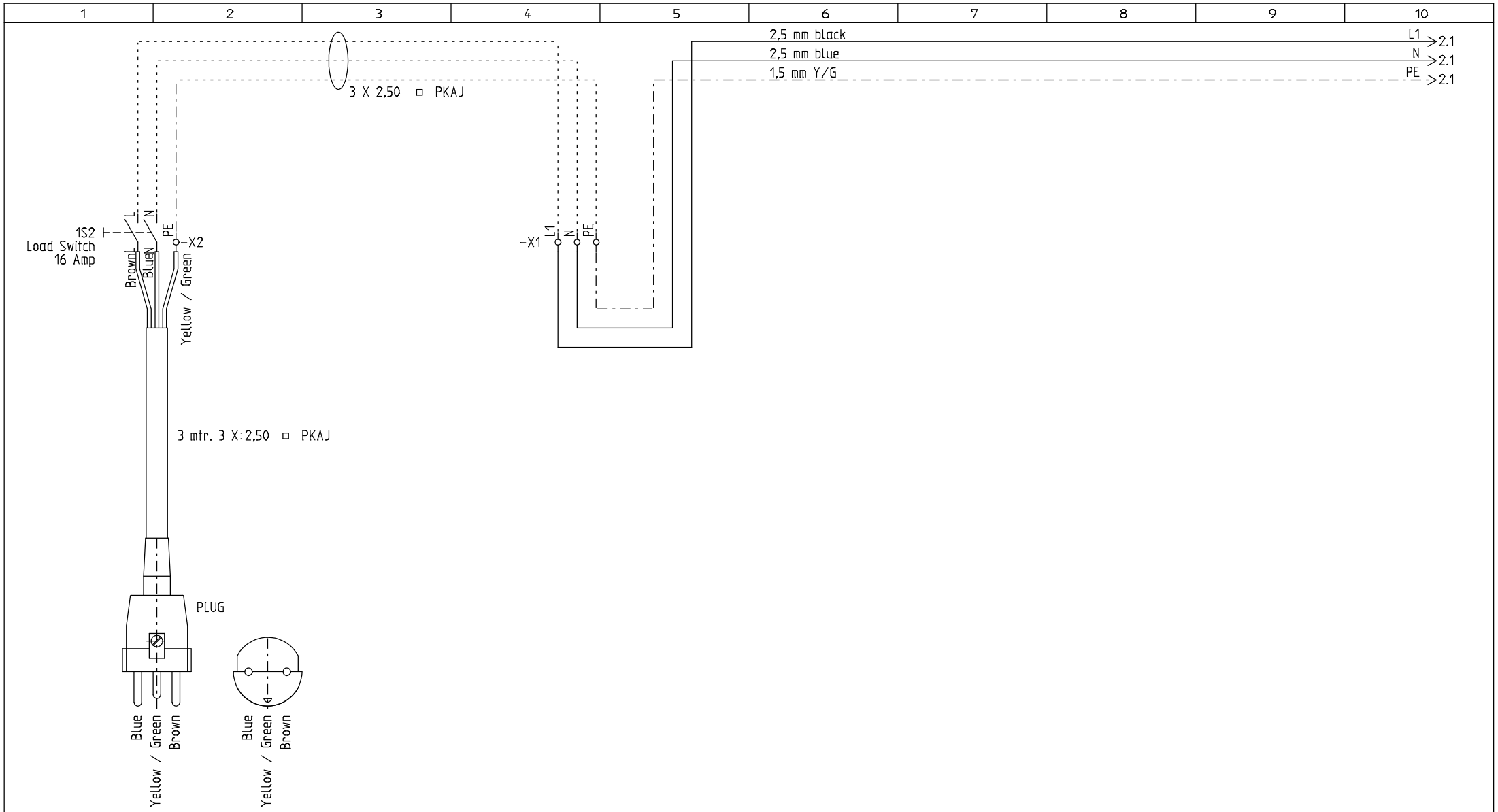

HEDENSTED GRUPPEN
Vejlevej 15, DK-8722 HEDENSTED
(+45) 75891244 - Fax: (+45) 75891180

Power supply

Projektnavn:
Quick_Cut_2011_02_FX3G

Tegnet: KE
Rettet: 10-01-2013 00:0

Næste Side: 2
Opr: 09-01-2011
Printdato: 25-01-2011
Side nr.: 1
Side af: 19

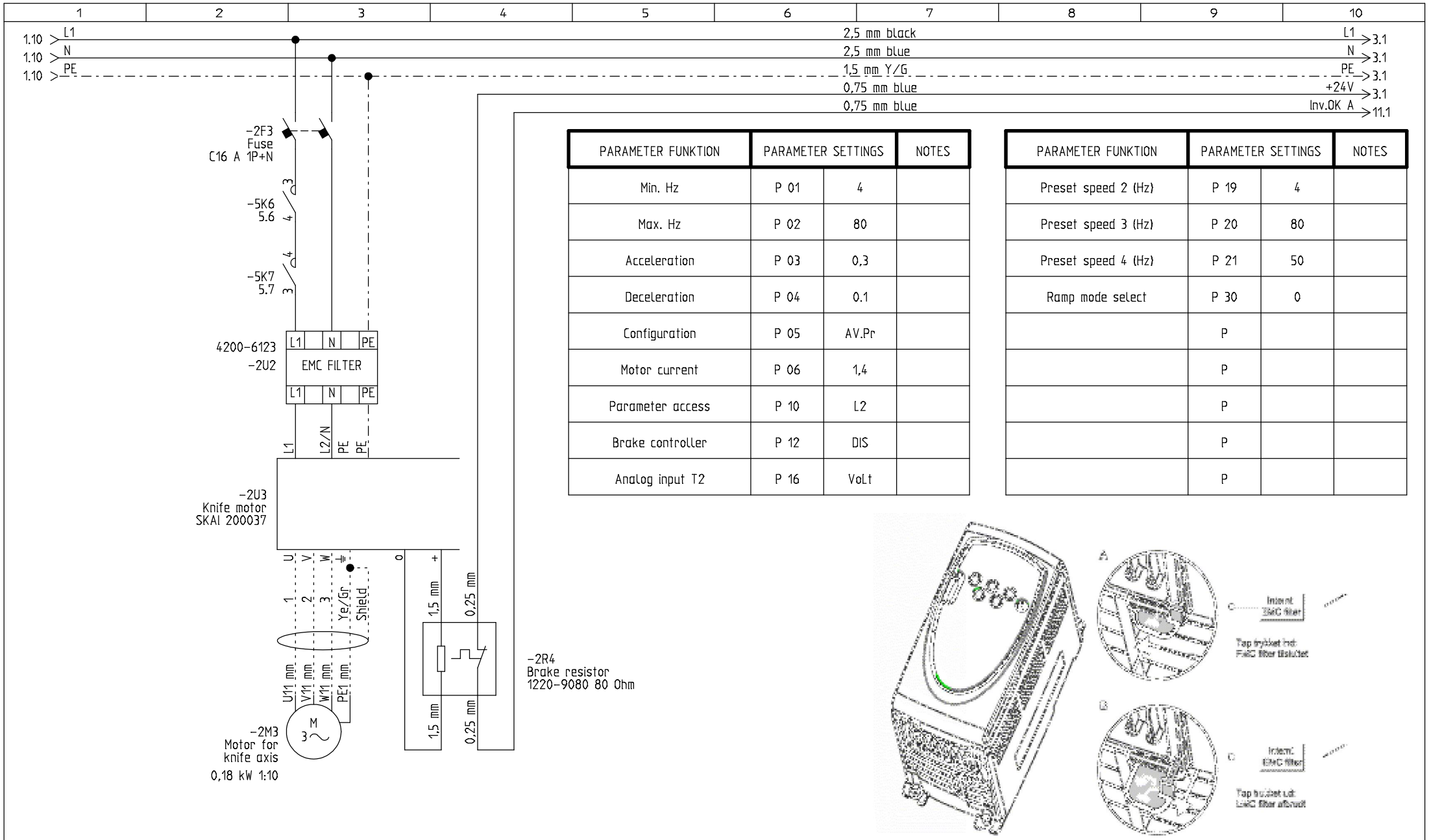

PARAMETER FUNKTION	PARAMETER SETTINGS		NOTES
Min. Hz	P 01	4	
Max. Hz	P 02	80	
Acceleration	P 03	0,3	
Deceleration	P 04	0.1	
Configuration	P 05	AV.Pr	
Motor current	P 06	1,4	
Parameter access	P 10	L2	
Brake controller	P 12	DIS	
Analog input T2	P 16	VoLt	

PARAMETER FUNKTION	PARAMETER SETTINGS		NOTES
Preset speed 2 (Hz)	P 19	4	
Preset speed 3 (Hz)	P 20	80	
Preset speed 4 (Hz)	P 21	50	
Ramp mode select	P 30	0	
	P		
	P		
	P		
	P		
	P		

HEDENSTED GRUPPEN
Vejlevej 15, DK-8722 HEDENSTED
(+45) 75891244 - Fax: (+45) 75891180

Mains knife

Projektnavn: Quick_Cut_2011_02_FX3G

Tegnet: KE

Rettet: 10-01-2013 00:0

Næste Side: 3

Opr: 09-01-2011

Printdato: 25-01-2011

Side nr.: 2

Side af: 19

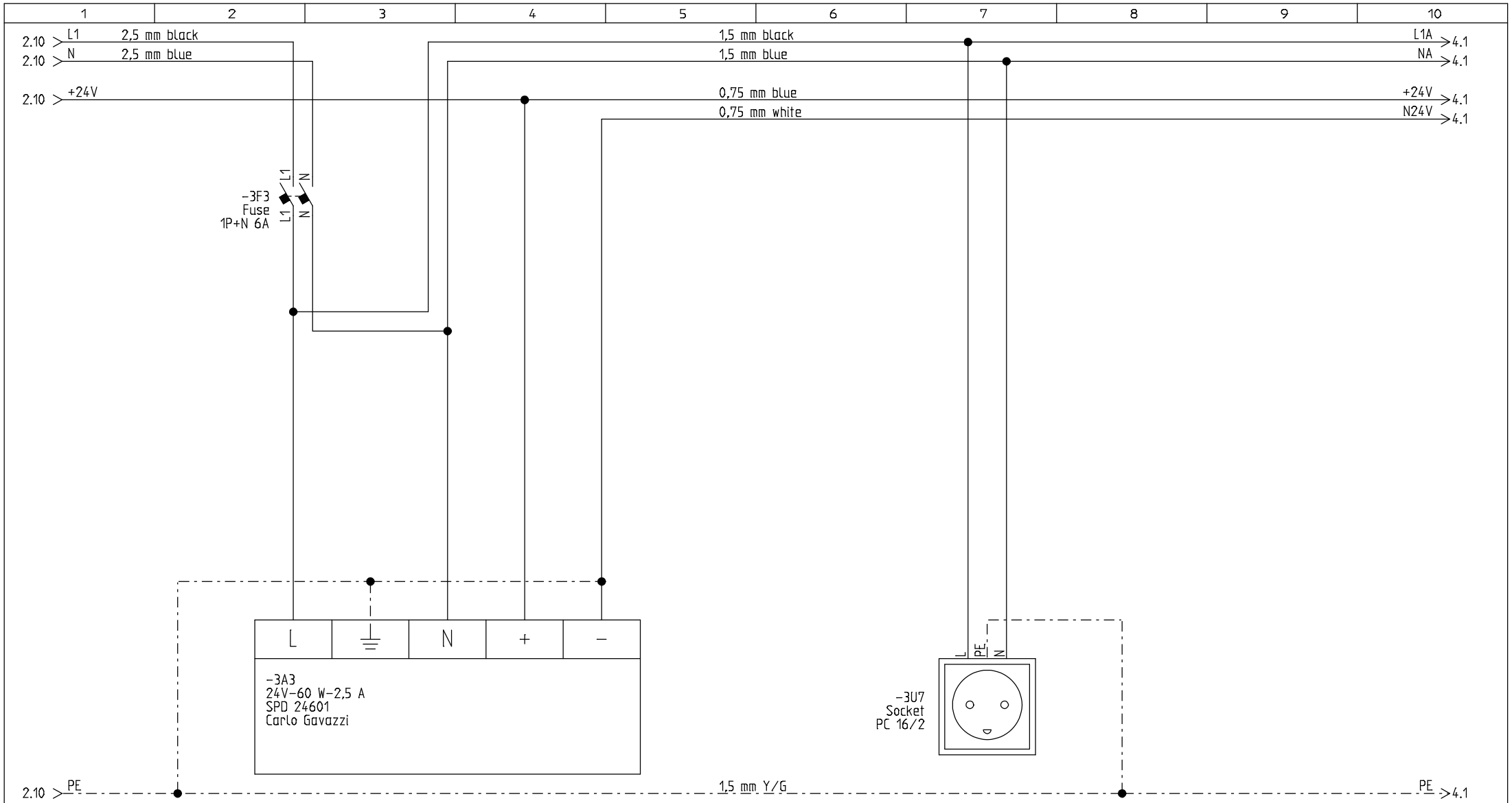

HEDENSTED GRUPPEN
Vejlevej 15, DK-8722 HEDENSTED
(+45) 75891244 - Fax: (+45) 75891180

24 VDC power

Projektnavn: Quick_Cut_2011_02_FX3G

Tegnet: KE

Rettet: 10-01-2013 00:0

Næste Side: 4

Opr: 09-01-2011

Printdato: 25-01-2011

Side nr.: 3

Side af: 19

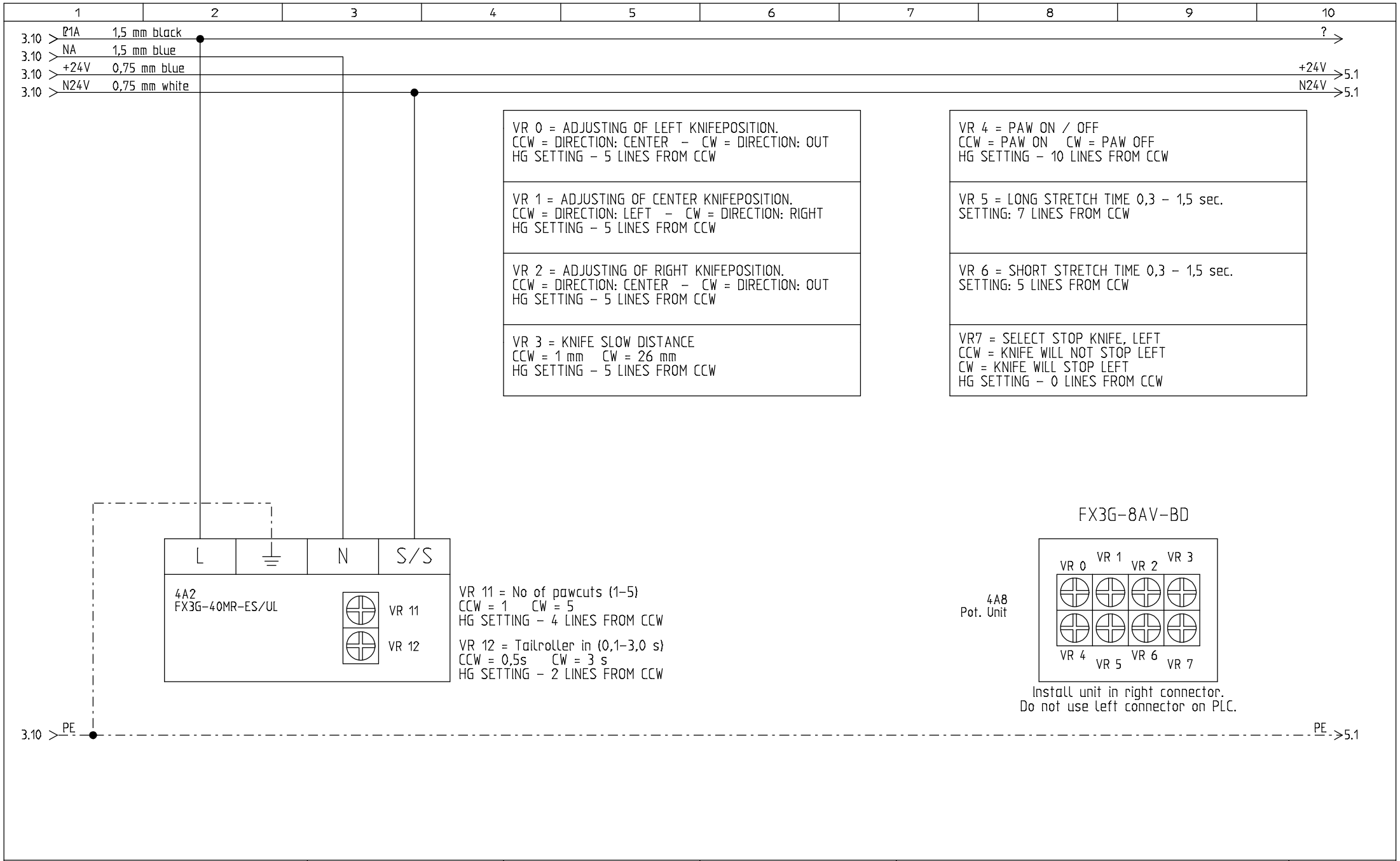

HEDENSTED GRUPPEN
Vejlevej 15, DK-8722 HEDENSTED
(+45) 75891244 - Fax: (+45) 75891180

PLC supply

Projektnavn: Quick_Cut_2011_02_FX3G			Tegnet: KE
			Rettet: 13-06-2013 12:3
Næste Side: 5	Printdato: 25-01-2011	Side nr.: 4	Side af: 19
Opr: 09-01-2011			

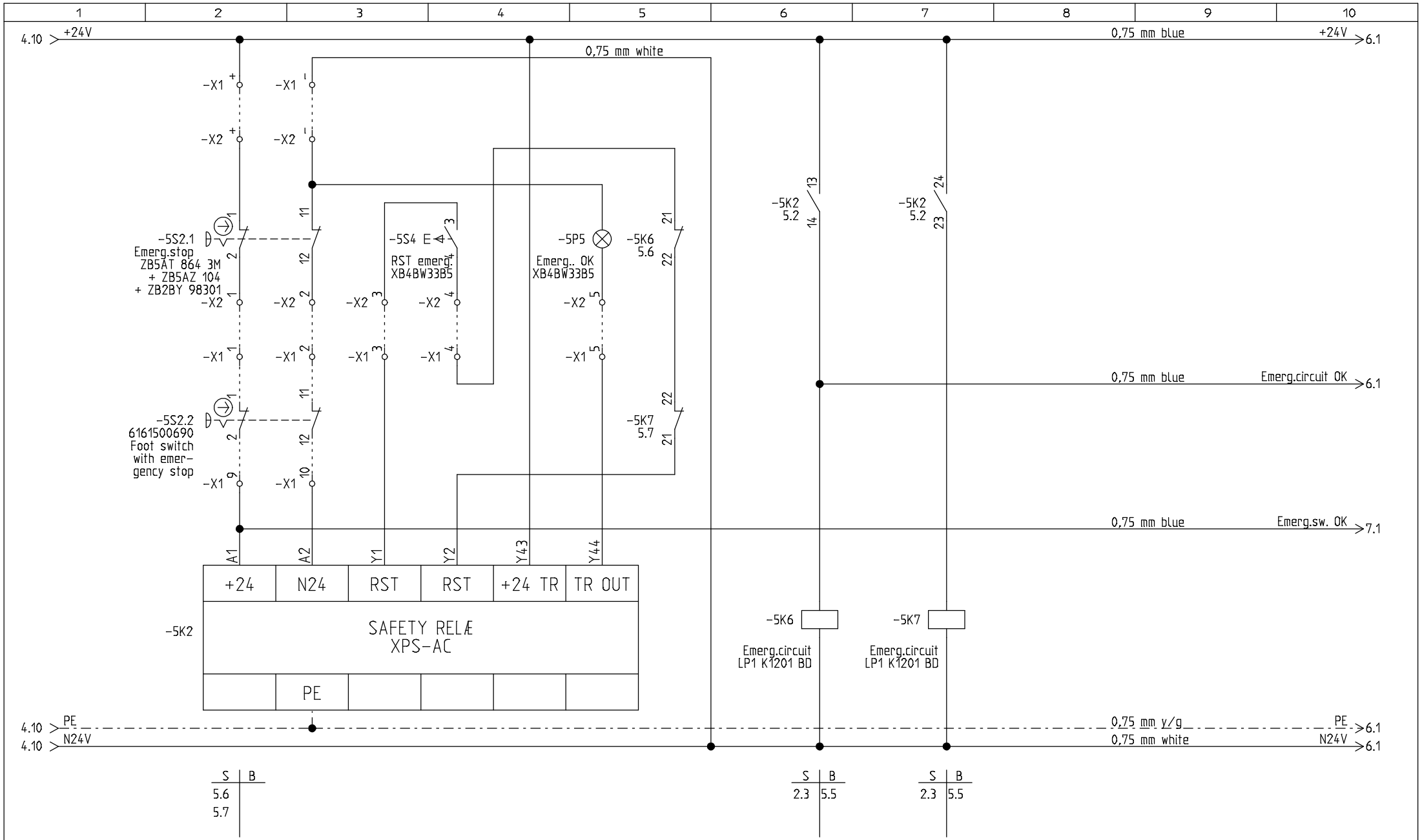

HEDENSTED GRUPPEN
Vejlevej 15, DK-8722 HEDENSTED
(+45) 75891244 - Fax: (+45) 75891180

Emergency circuit

Projektnavn: Quick_Cut_2011_02_FX3G

Tegnet: KE

Rettet: 13-06-2013 12:3

Næste Side: 6

Opr: 09-01-2011

Printdato: 25-01-2011

Side nr.: 5

Side af: 19

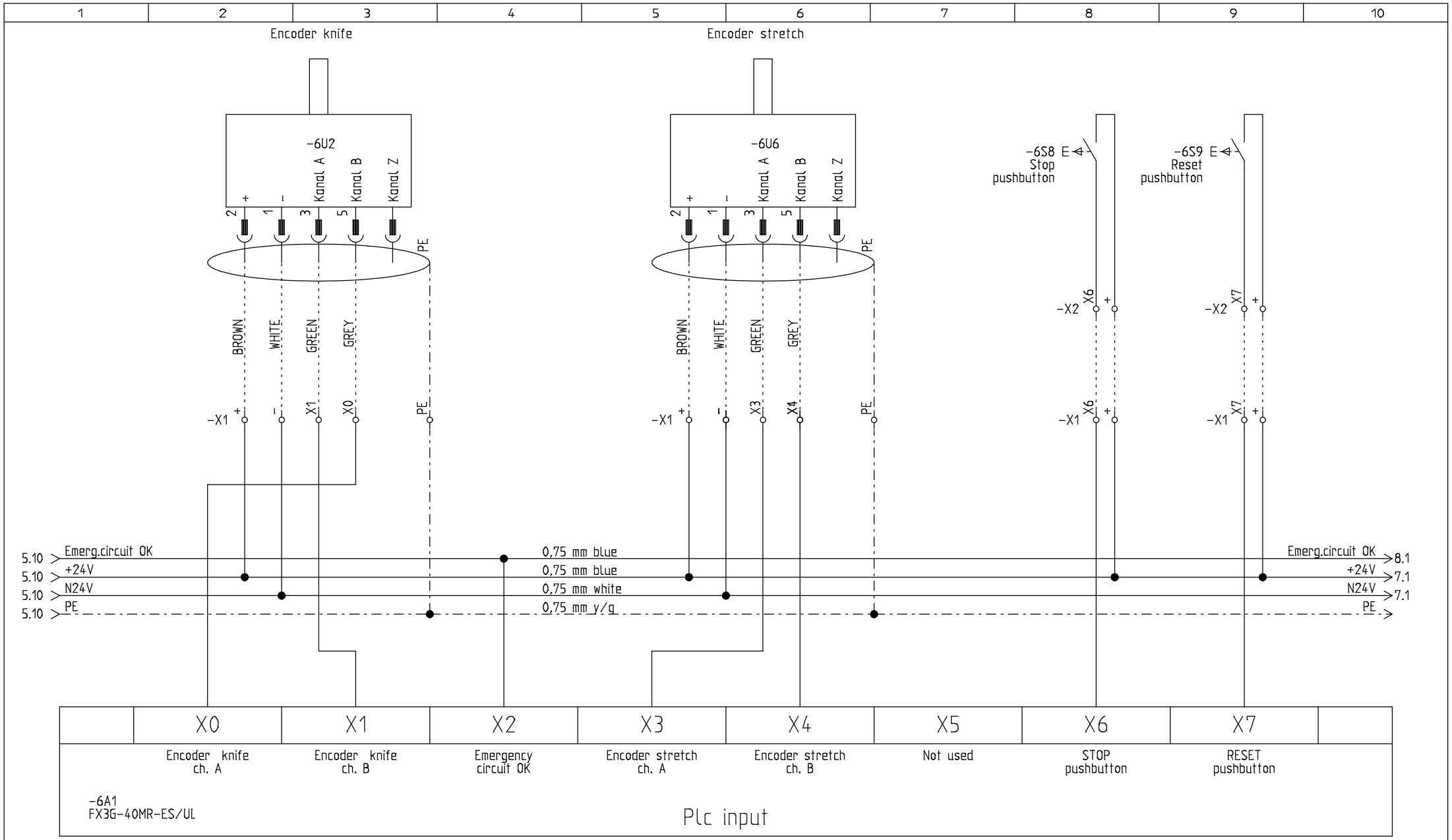

HEDENSTED GRUPPEN
Vejlevej 15, DK-8722 HEDENSTED
(+45) 75891244 - Fax: (+45) 75891180

PLC Inputs X0-X7

Projektnavn: Quick_Cut_2011_02_FX3G

Tegnet: KE

Rettet: 13-06-2013 12:3

Næste Side: 7

Opr: 09-01-2011

Printdato: 25-01-2011

Side nr.: 6

Side af: 19

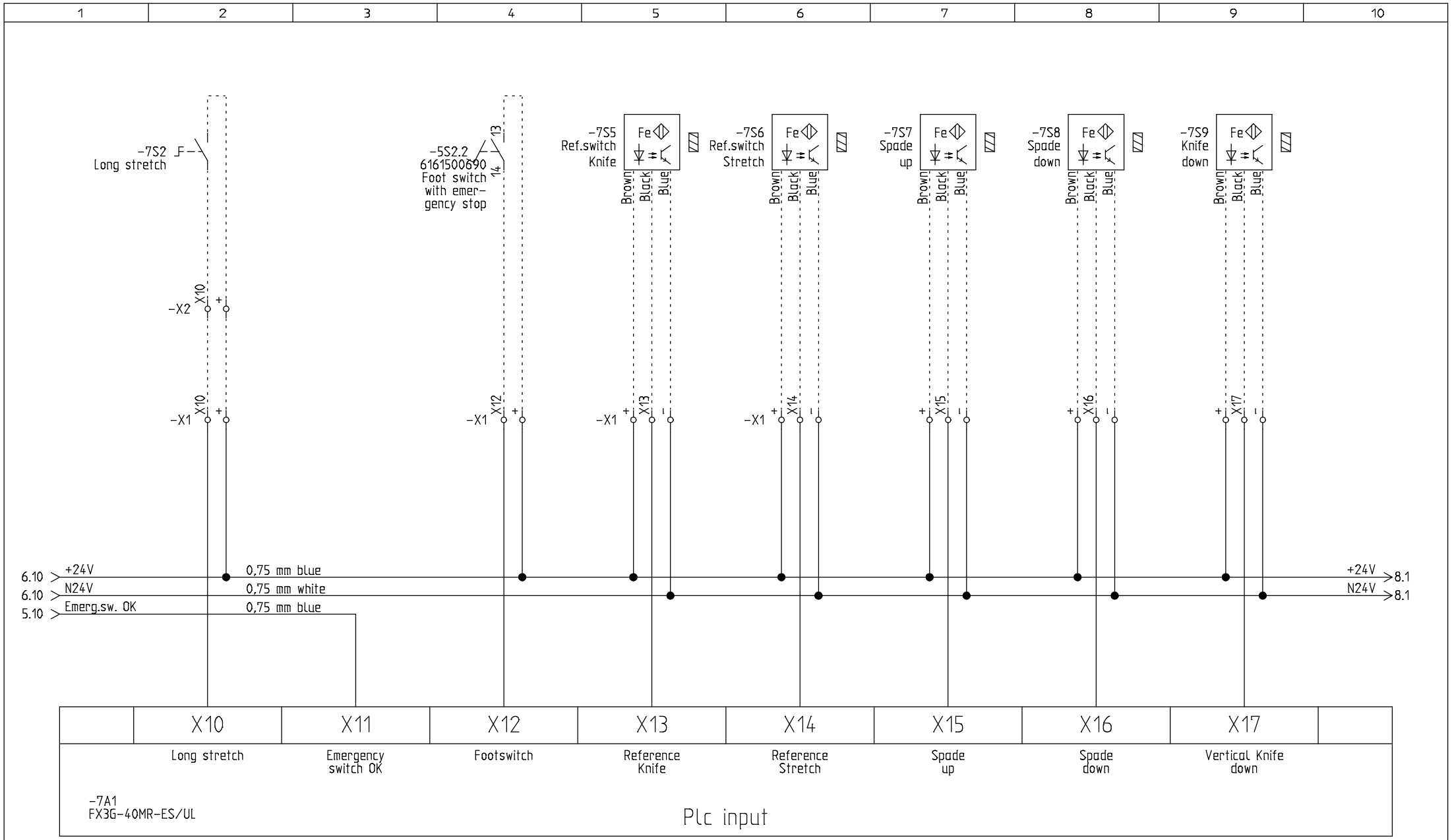

HEDENSTED GRUPPEN
Vejlevej 15, DK-8722 HEDENSTED
(+45) 75891244 - Fax: (+45) 75891180

PLC Inputs X10-X17

Projektnavn:
Quick_Cut_2011_02_FX3G

Tegnet: KE
Rettet: 10-01-2013 00:0

Næste Side: 8
Opr: 09-01-2011
Printdato: 25-01-2011
Side nr.: 7
Side af: 19

1	2	3	4	5	6	7	8	9	10

6.10 > Emerg.circuit OK — Emerg.circuit OK > 9.1

Inv.OK > 11.1

7.10 > +24V — 0,75 mm blue — +24V > 9.1

7.10 > N24V — 0,75 mm white — N24V > 9.1

	X20	X21	X22	X23	X24	X25	X26	X27	
	Knife inverter OK	Not used	Not used	Not used	Not used	Not used	Reset total cycles 1	Reset total cycles 2	

-8A1
FX3G-40MR-ES/UL

Plc input

HEDENSTED GRUPPEN
Vejlevej 15, DK-8722 HEDENSTED
(+45) 75891244 - Fax: (+45) 75891180

PLC Inputs X20-X27

Projektnavn: Quick_Cut_2011_02_FX3G

Tegnet: KE

Rettet: 10-01-2013 00:0

Næste Side: 9

Opr: 09-01-2011

Printdato: 25-01-2011

Side nr.: 8

Side af: 19

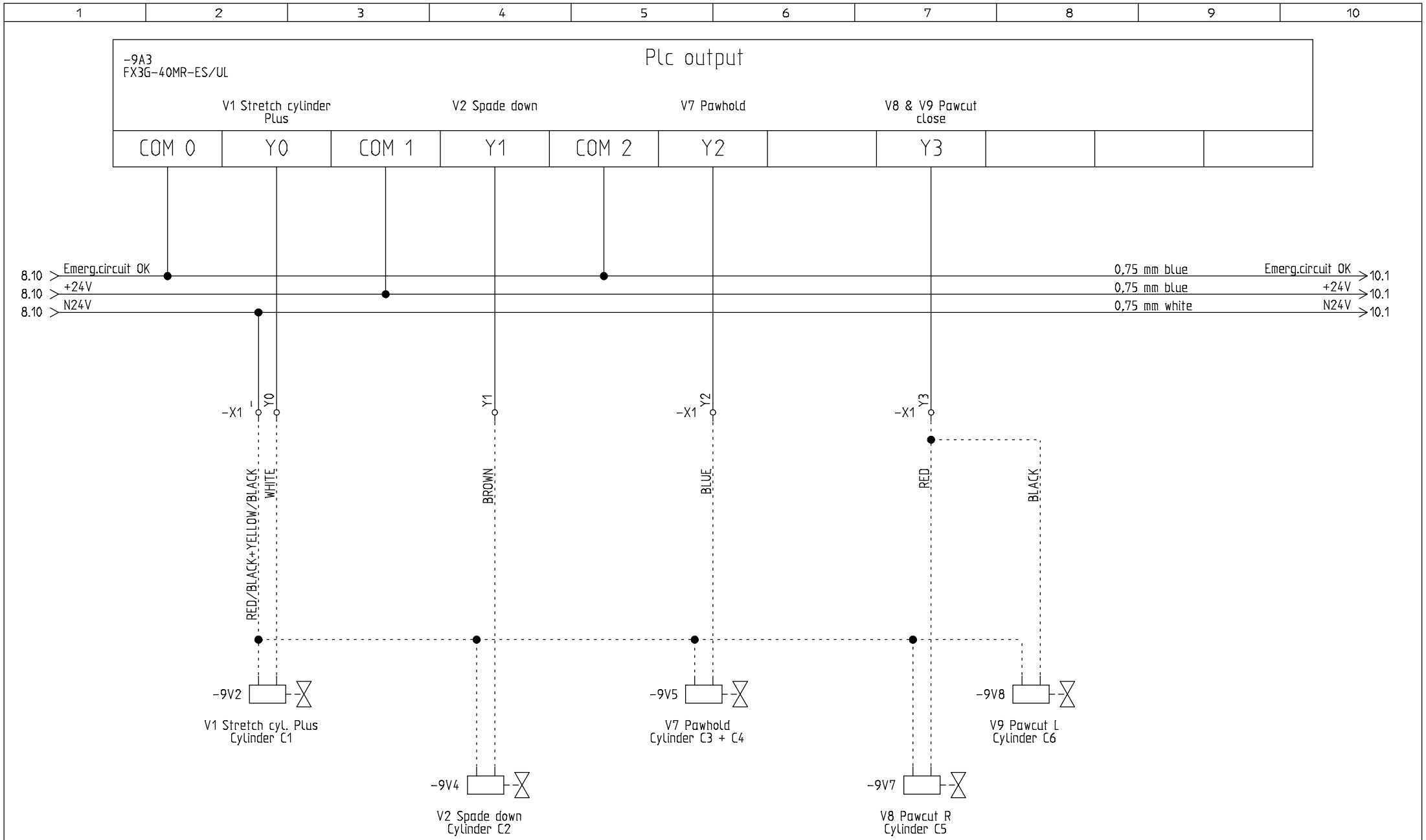

HEDENSTED GRUPPEN
Vejlevej 15, DK-8722 HEDENSTED
(+45) 75891244 - Fax: (+45) 75891180

PLC outputs Y0-Y3

Projektnavn: Quick_Cut_2011_02_FX3G

Tegnet: KE

Rettet: 10-01-2013 00:0

Næste Side: 10

Opr: 09-01-2011

Printdato: 25-01-2011

Side nr.: 9

Side af: 19

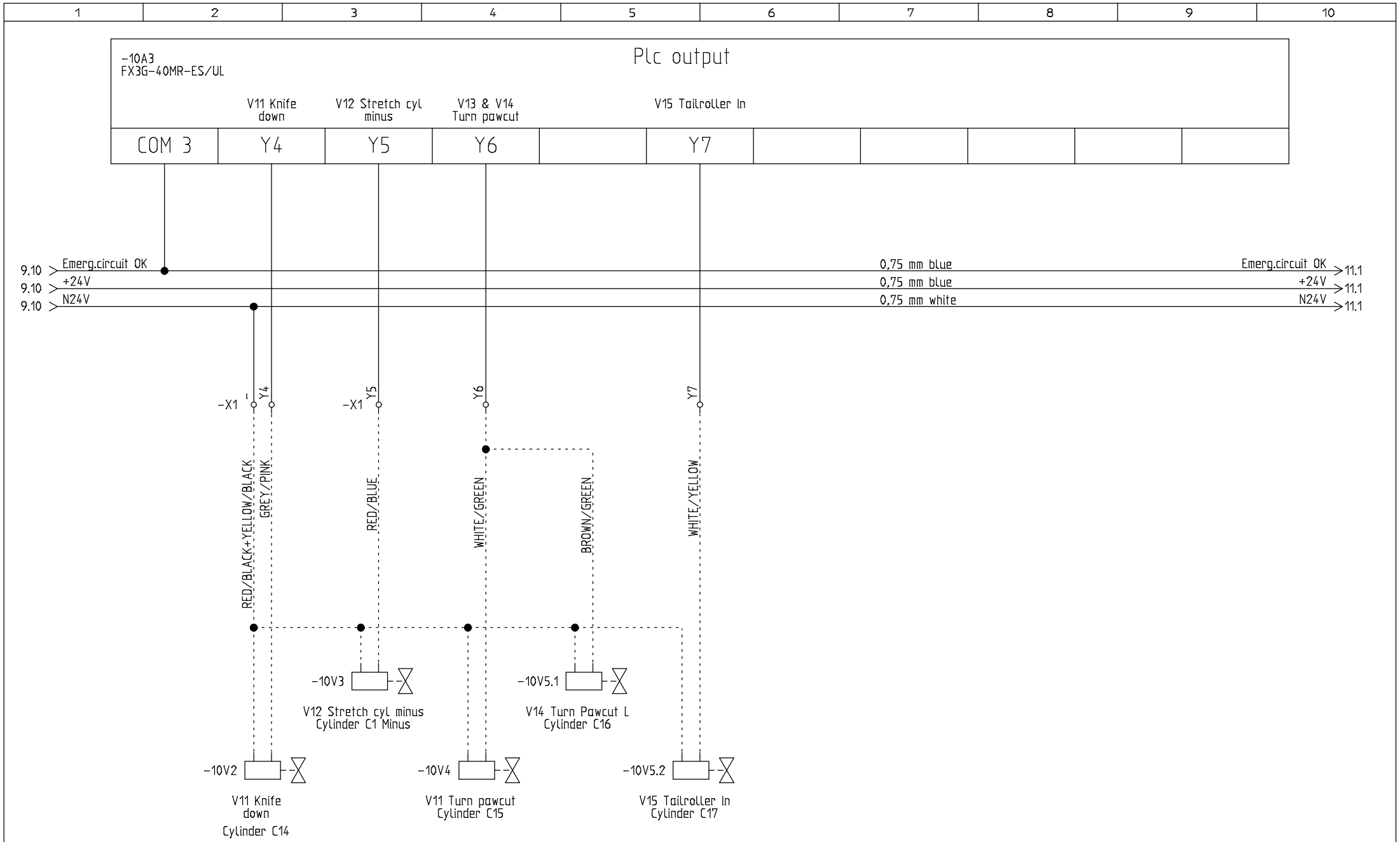

HEDENSTED GRUPPEN
Vejlevej 15, DK-8722 HEDENSTED
(+45) 75891244 - Fax: (+45) 75891180

PLC outputs Y4-Y7

Projektnavn: Quick_Cut_2011_02_FX3G

Tegnet: KE

Rettet: 10-01-2013 00:0

Næste Side: 11

Opr: 09-01-2011

Printdato: 25-01-2011

Side nr.: 10

Side af: 19

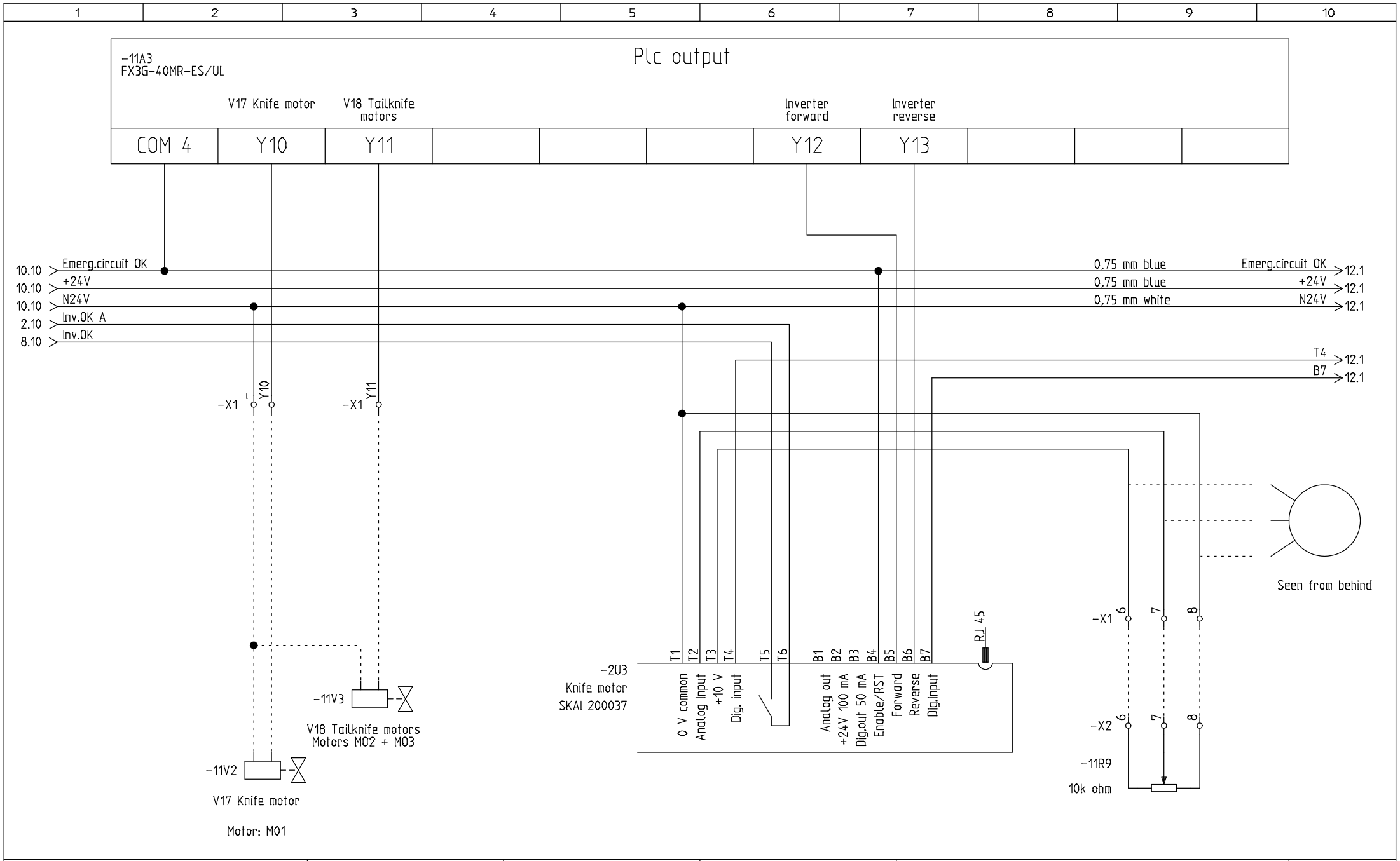

HEDENSTED GRUPPEN
Vejlevej 15, DK-8722 HEDENSTED
(+45) 75891244 - Fax: (+45) 75891180

PLC outputs Y10-Y13

Projektnavn: Quick_Cut_2011_02_FX3G

Tegnet: KE

Rettet: 10-01-2013 00:0

Næste Side: 12

Opr: 09-01-2011

Printdato: 25-01-2011

Side nr.: 11

Side af: 19

1	2	3	4	5	6	7	8	9	10

-12A3
FX3G-40MR-ES/UL

Plc output

	Knife: low speed	Knife: high speed	Not used	Not used						
COM 5	Y14	Y15	Y16	Y17						

11.10 >	Emerg.circuit OK	0,75 mm blue	Emerg.circuit OK >
11.10 >	+24V	0,75 mm blue	+24V >
11.10 >	N24V	0,75 mm white	N24V >
11.10 >	B7		
11.10 >	T4		

HEDENSTED GRUPPEN
Vejlevej 15, DK-8722 HEDENSTED
(+45) 75891244 - Fax: (+45) 75891180

PLC outputs Y14-Y17

Projektnavn: Quick_Cut_2011_02_FX3G

Tegnet: KE
Rettet: 10-01-2013 00:0

Næste Side: 13
Opr: 09-01-2011
Printdato: 25-01-2011
Side nr.: 12
Side af: 19

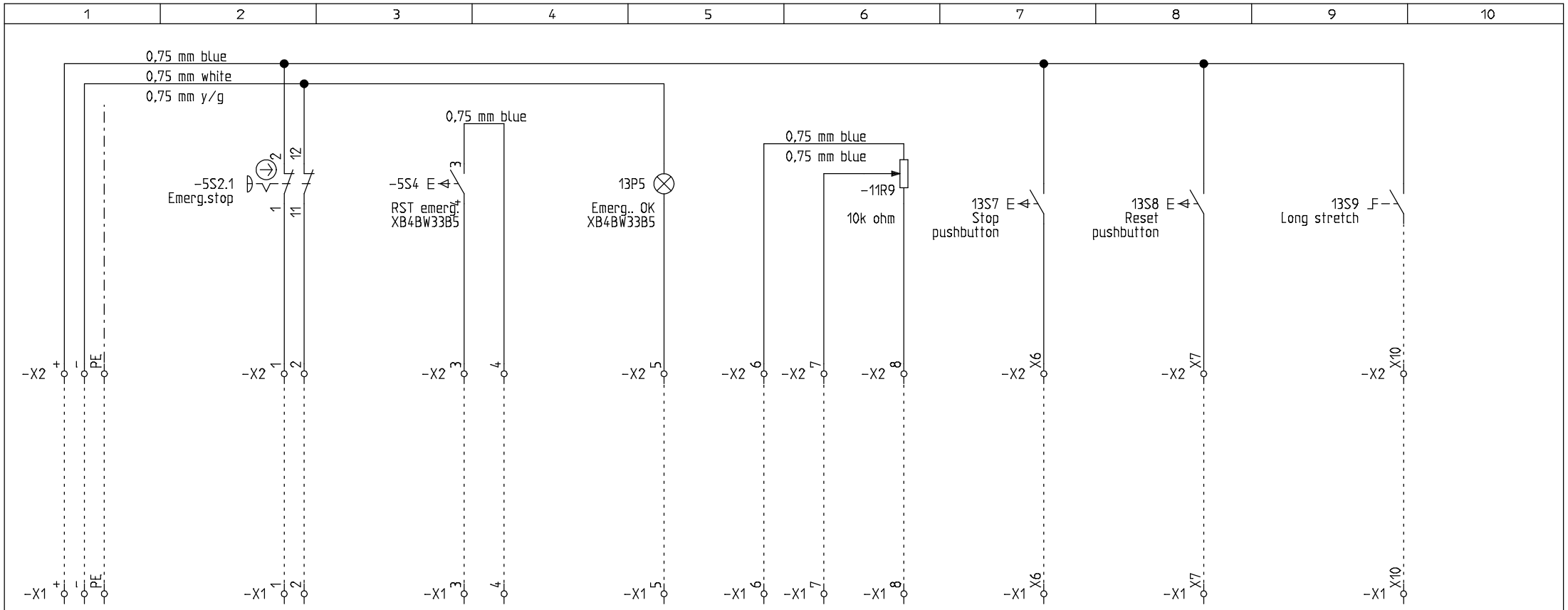

HEDENSTED GRUPPEN
Vejlevej 15, DK-8722 HEDENSTED
(+45) 75891244 - Fax: (+45) 75891180

Ext.connections 1/6

Projektnavn: Quick_Cut_2011_02_FX3G

Tegnet: KE

Rettet: 10-01-2013 00:0

Næste Side: 14

Opr: 09-01-2011

Printdato: 02-06-2010

Side nr.: 13

Side af: 19

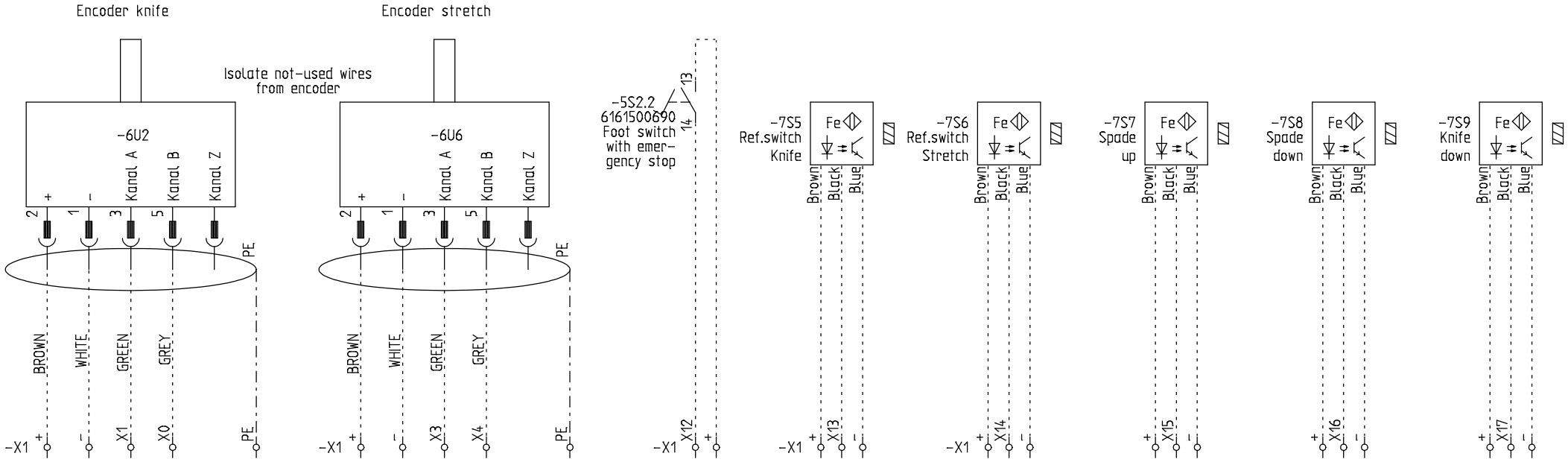

HEDENSTED GRUPPEN
Vejlevej 15, DK-8722 HEDENSTED
(+45) 75891244 - Fax: (+45) 75891180

Ext. connections 2/6

Projektnavn: Quick_Cut_2011_02_FX3G

Tegnet: KE

Rettet: 13-06-2013 12:3

Næste Side: 16

Opr: 09-01-2011

Printdato: 02-06-2010

Side nr.: 14

Side af: 19

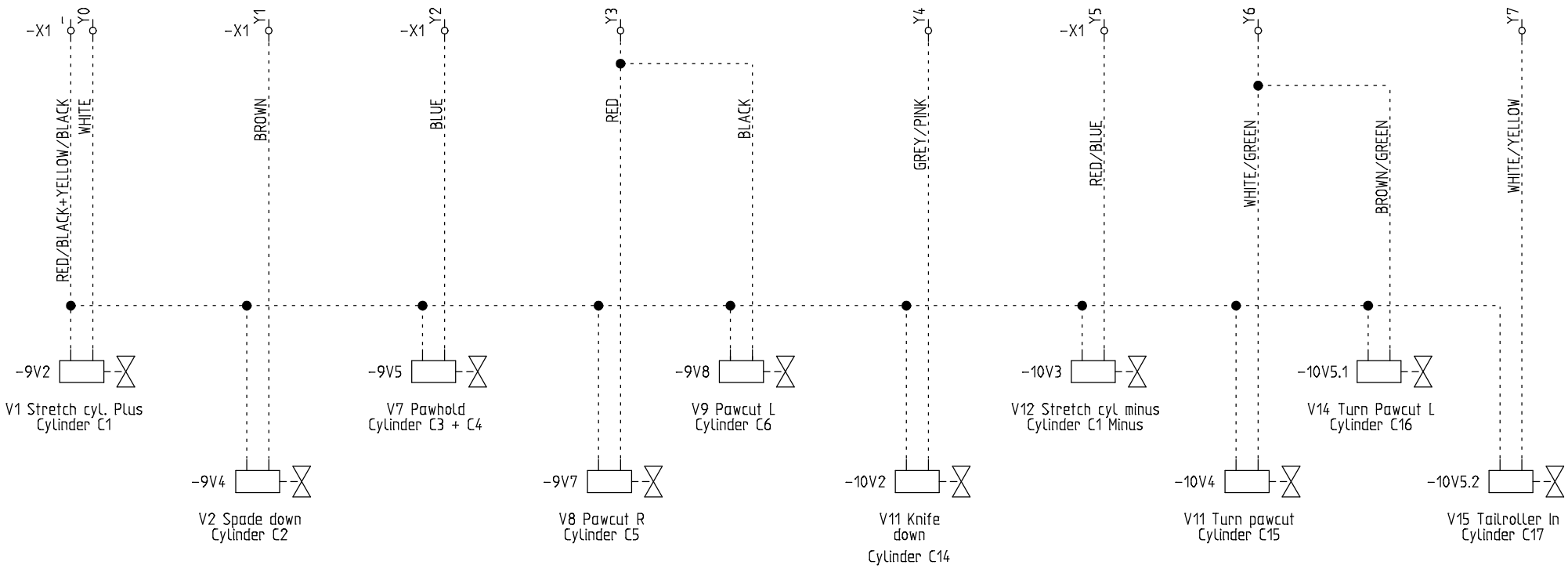

HEDENSTED GRUPPEN
Vejlevej 15, DK-8722 HEDENSTED
(+45) 75891244 - Fax: (+45) 75891180

Ext. connections 3/6

Projektnavn:
Quick_Cut_2011_02_FX3G

Tegnet: KE
Rettet: 10-01-2013 00:0

Næste Side: 17
Opr: 09-01-2011
Printdato: 02-06-2010
Side nr.: 16
Side af: 19

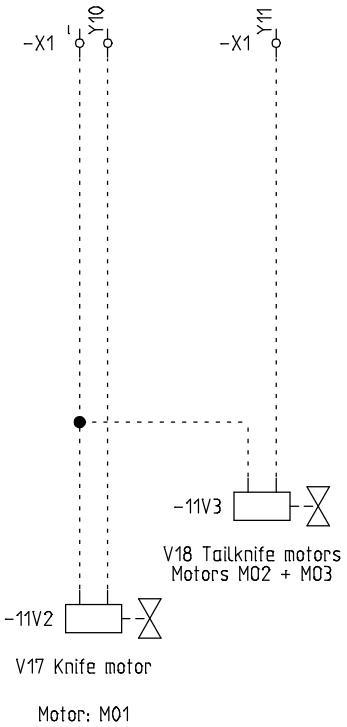

HEDENSTED GRUPPEN
Vejlevej 15, DK-8722 HEDENSTED
(+45) 75891244 - Fax: (+45) 75891180

Ext.connections 4/6

Projektnavn: Quick_Cut_2011_02_FX3G

Tegnet: KE

Rettet: 10-01-2013 00:0

Næste Side: 19

Opr: 09-01-2011

Printdato: 02-06-2010

Side nr.: 17

Side af: 19

1	2	3	4	5	6	7	8	9	10

Terinals X1, main panel

WPE 2,5 Gu/Gø	WDU 2,5 Beige	WDU 2,5 Beige	WDU 2,5 Beige	WDU 2,5 Beige	WDU 2,5 Beige	WDU 2,5 Beige	WDU 2,5 Beige	WDU 2,5 Beige	WDU 2,5 Beige	WDU 2,5 Beige	WDU 2,5 Beige	WDU 2,5 Beige	WDU 2,5 Beige	WDU 2,5 Beige	WDU 2,5 Beige	WDU 2,5 Beige	DLD 2,5 yellow	DLD 2,5 yellow	DLD 2,5 yellow	DLD 2,5 yellow	DLD 2,5 yellow	DLD 2,5 yellow	DLD 2,5 yellow	DLD 2,5 yellow
PE	N	L1	+	-	1	2	3	4	5	6	7	8	9	10	X6	X7	X10	pe	-	+	X0	+	-
			+	-	1	2	3	4	5	6	7	8			X6	X7	X10	pe	-	+	X1	+	-
			WDU 2,5 Beige	WDU 2,5 Beige	WDU 2,5 Beige	WDU 2,5 Beige	WDU 2,5 Beige	WDU 2,5 Beige	WDU 2,5 Beige	WDU 2,5 Beige	WDU 2,5 Beige	WDU 2,5 Beige			WDU 2,5 Beige	WDU 2,5 Beige	WDU 2,5 Beige	WDU 2,5 Beige			DLD 2,5 yellow	DLD 2,5 yellow	DLD 2,5 yellow	DLD 2,5 yellow

Supply

Terminals X2, operators panel

DLD 2,5 yellow	DLD 2,5 yellow	DLD 2,5 yellow	DLD 2,5 yellow	DLD 2,5 yellow	DLD 2,5 yellow	DLD 2,5 yellow	DLD 2,5 yellow	DLD 2,5 yellow	DLD 2,5 yellow	DLD 2,5 yellow	DLD 2,5 yellow	WDK 2,5 yellow	WDK 2,5 yellow	WDK 2,5 yellow	WDK 2,5 yellow	WDK 2,5 yellow	WDK 2,5 yellow	WDK 2,5 yellow	WDK 2,5 yellow	WDK 2,5 yellow	WDK 2,5 yellow	WDK 2,5 yellow	WDK 2,5 yellow
X17	X16	X15	X14	X13	X12	X4	X3	X1	X0	+	-	Y11	Y10	Y7	Y6	Y5	Y4	Y3	Y2	Y1	Y0	+	-
+	+	+	+	+	+	+	+	+	+	-	-	-	-	-	-	-	-	-	-	-	-	-	-
-	-	-	-	-	-	-	-	-	-	-	-	-	-	-	-	-	-	-	-	-	-	-	-

HEDENSTED GRUPPEN
Vejlevej 15, DK-8722 HEDENSTED
(+45) 75891244 - Fax: (+45) 75891180

Terminals

Projektnavn: Quick_Cut_2011_02_FX3G			Tegnet: KE
			Rettet: 11-06-2012 00:0
Næste Side: 20	Printdato: 26-01-2011	Side nr.: 19	Side af: 19
Opr: 09-01-2011			

X0	Encoder knife ch. A		Y0	Stretch cylinder plus
X1	Encoder knife ch. B		Y1	Spade down
X2	Emergency circuit OK		Y2	Pawhold close
X3	Encoder stretch ch. A		Y3	Paw cut
X4	Encoder stretch ch. B		Y4	Crossknife down
X5	Reserved		Y5	Stretch cylinder minus
X6	Stop button		Y6	Turn pawcut
X7	Reset button		Y7	Tailroller in
X10	Long stretch		Y10	Crossknife motor
X11	Emergency switch OK		Y11	Tailknife motors
X12	Foot switch		Y12	Crossknife forward
X13	Ref.switch knife		Y13	Crossknife reverse
X14	Ref.switch stretch		Y14	Crossknife speed 1
X15	Spade up		Y15	Crossknife speed 2
X16	Spade down		Y16	Not used
X17	Knife down		Y17	Not used
X20	Knife inverter OK			
X21	Not used			
X22	Not used			
X23	Not used			
X24	Not used			
X25	Not used			
X26	Reset total cycles 1			
X27	Reset total cycles 2			

HEDENSTED GRUPPEN
Vejlevej 15, DK-8722 HEDENSTED
(+45) 75891244 - Fax: (+45) 75891180

IN / OUT list

Projektnavn: Quick_Cut_2011_02_FX3G

Næste Side: 21
Opr: 09-01-2011

Printdato: 26-01-2011

Side nr.: 20

Side af: 19

Tegnet: KE
Rettet: 11-06-2012 00:0