Spare Parts

HG FEEDER 100/125/160 M

First Serial number and forward

Feeder 100M 077/2015 ->>>
Feeder 125M 088/2015 ->>>
Feeder 160M 035/2015 ->>>

HEDENSTED GRUPPEN

11 Spare parts list and appendice

11.1 Commonly used parts

Item no.	Feeder 100/125/160 M
474760	Tractor tyres (only Feeder 100/125 M)
474746	Lawn tyres (only Feeder 100/125 M)
476710	Motor oil, 20 litre container
476722	Hydraulic oil, 20 litre container
424533	Filter insert for hydraulic oil
468025	Air filter insert
468030	Motor oil filter
468035	Fuel filter
468040	Fan belt
475507	Work light

PARTS LIST			
ITEM	QTY	PART NUMBER	DESCRIPTION
1	4	11408016	Hexagon bolt M8x16 FZB
2	1	12908025	Hexagon bolt m8 x 25 - A2
3	1	17908000	Self-locking nut M8 FZB
4	1	250076	Pulling unit
5	0,4 m	250210	Spiral pvc inv. ø44
6	1	30047	ID plate Feeder 100 M
7	6,0 l	476705	Engine oil Q8 T520 15W-40
8	40,0 l	476721	Hydraulic oil Q8 handel 46
9	4	477163	Bopnded seal washer 3/8"
10	2	477222	Banjo bolt 3/8" bsp
11	0,33 m	600595	Spiral pipe SPS25
12	2	82608000	Washer ø8x24x2 DIN9021A

PARTS LIST			
ITEM	QTY	PART NUMBER	DESCRIPTION
13	4	83608040	Washer Ø42x9x4 FZB
14	1	M100089	Spacer for feedcan
15	2	M100102	Steering cylinder stroke 160
16	1	M100122	900 Container unit
17	1	M100216	Labels for Feeder
18	1	M100217	Waste tray
19	1	M100219	Brace for feed can

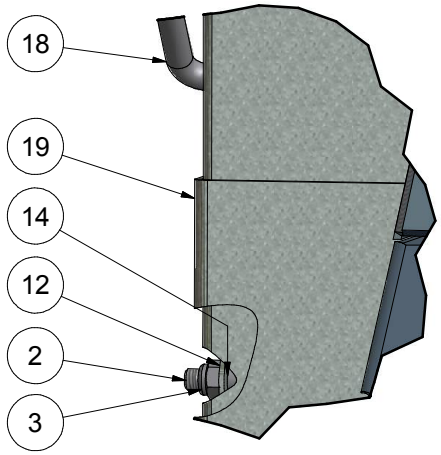

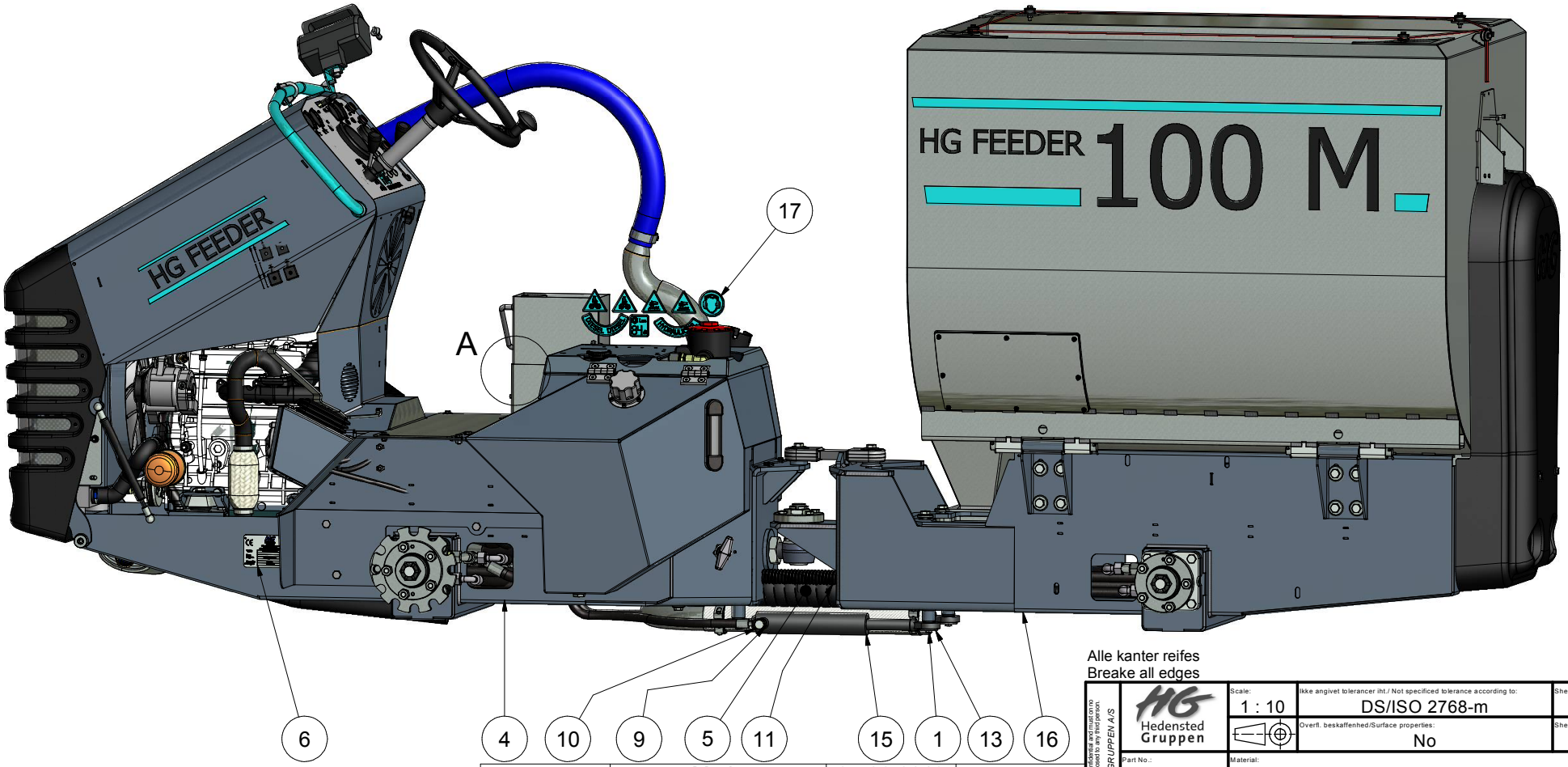

Alle kanter reifes
Breake all edges

REV	DESCRIPTION	DATE	APPROVED
A	Made	27-06-2013	KC
B	Part List updated	01-04-2014	KC

REVISION HISTORY

This document is strictly confidential and must on no ground be reproduced, copied or shared with others.
HEDENSTED GRUPPEN A/S

Hedensted Gruppen

Scale: 1 : 10	Ikke angivet tolerancer iht./ Not specificed tolerance according to: DS/ISO 2768-m	Sheet size: A3
	Overfl. beskaffenhed/Surface properties: No	Sheet: 1 /1
Part No.: M100346	Material:	
Description: Base module Feeder 100M		
Description:		

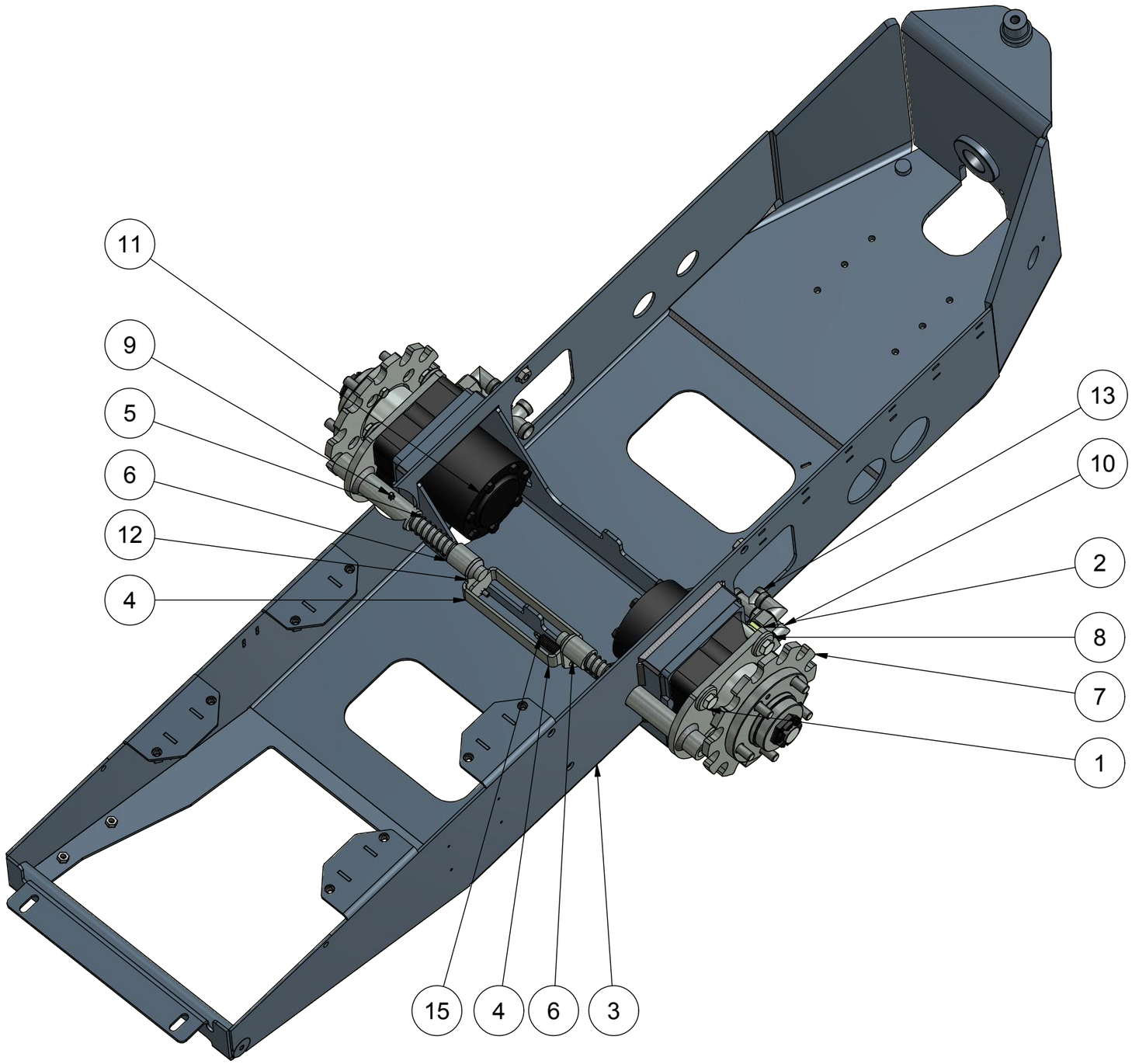

PARTS LIST			
ITEM	QTY	PART NUMBER	DESCRIPTION
1	8	11412070	Hexagon bolt M12x70 FZB
2	2	250081	Brace for brake
3	1	250087	Bottom frame for P-U
4	2	250090	Brake shaft assembly
5	2	250093	Compression spring Di 20,5 Lo 76
6	2	250133	Spacer for brake
7	2	250143	Wheel hub with brake
8	8	4212000	Washe type TBRSB 13x36x6 FZB
9	2	423068	Grease fitting M6 straight
10	4	424048	Adjustible elbow 15L DM
11	2	430105	Delta 252ccm wheelmotor
12	1	470502	Nipple for throtle cable
13	2	477072	Adjustible tee SL15 L
15	1	M100047	Extension spring
14	4	477145	Male stud D15L 7/8"-14 UNF

Alle kanter reifes
Breake all edges

REV	DESCRIPTION	DATE	APPROVED
A	Made	09-12-2011	KC
B	Part list updated	14-03-2013	KC

REVISION HISTORY

This document is strictly confidential and must on no account be copied or disclosed to any third person.
HEDENSTED GRUPPEN A/S

Hedensted Gruppen

Scale: 1 : 6	Ikke angivet tolerancer iht./ Not specificed tolerance according to: DS/ISO 2768-m		Sheet size: A3
	Overfl. beskaffenhed/Surface properties: No		Sheet: 1 /2
Part No.: M100046	Material:		
Description: Base assembly 1 PU			
Description:			

PARTS LIST			
ITEM	QTY	PART NUMBER	DESCRIPTION
1	2	11408020	Hexagon bolt m8x20 FZB
2	1	250086	Brake disc
3	1	M100041	Wheel hub assembly slim

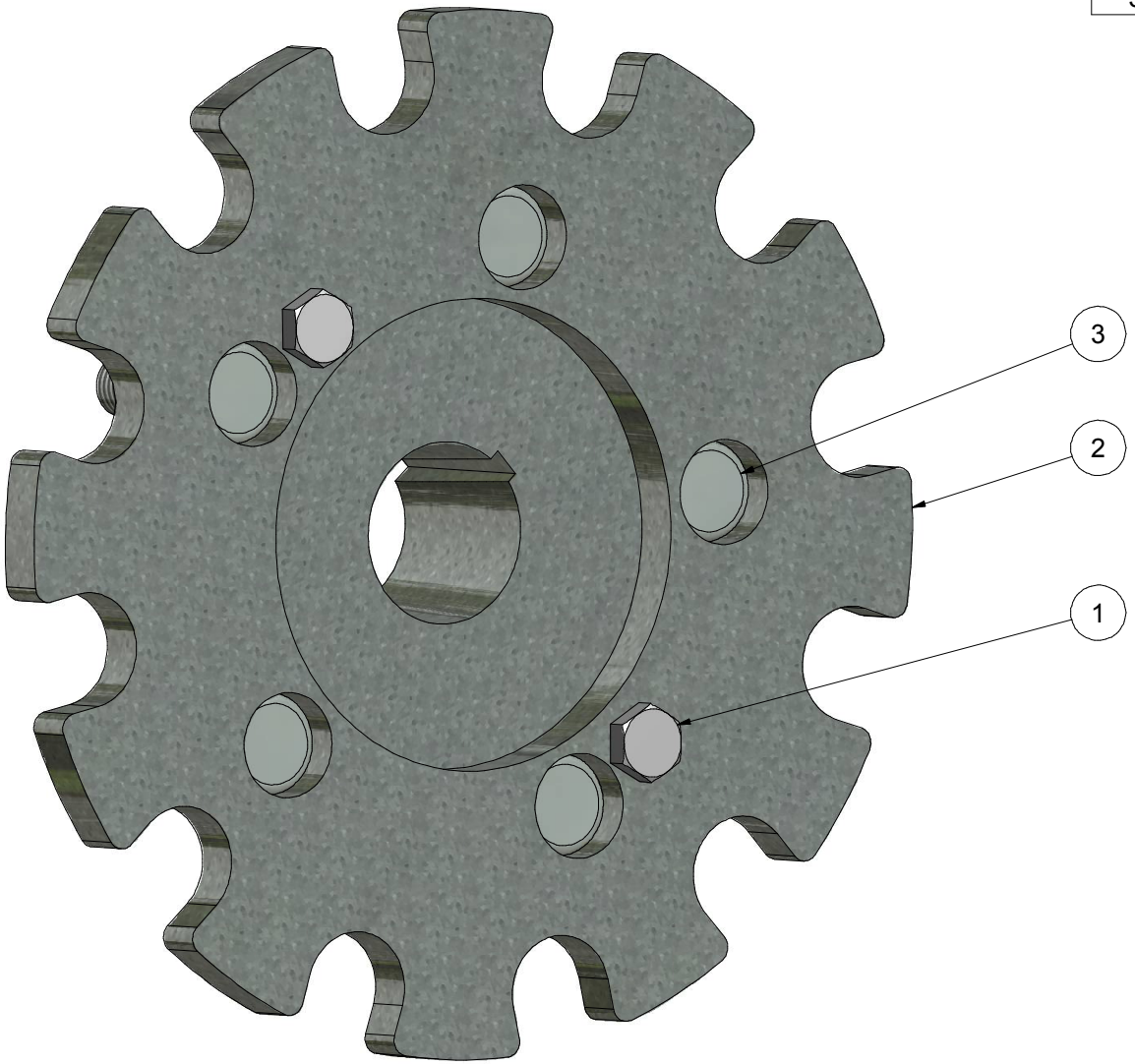

Alle kanter reifes
Breake all edges

REV	DESCRIPTION	DATE	APPROVED
A	Made	12-12-2011	KC

REVISION HISTORY

The document is strictly confidential and must on no account be reproduced or made available to third parties.
HEDENSTED GRUPPEN A/S

Hedensted Gruppen

Scale: 1 : 1	Ikke angivet tolerancer iht./ Not specificed tolerance according to: DS/ISO 2768-m	Sheet size: A3
	Overfl. beskaffenhed/Surface properties: No	Sheet: 1 /1
Part No.: 250143	Material:	
Description: Wheel hub with brake		
Description:		

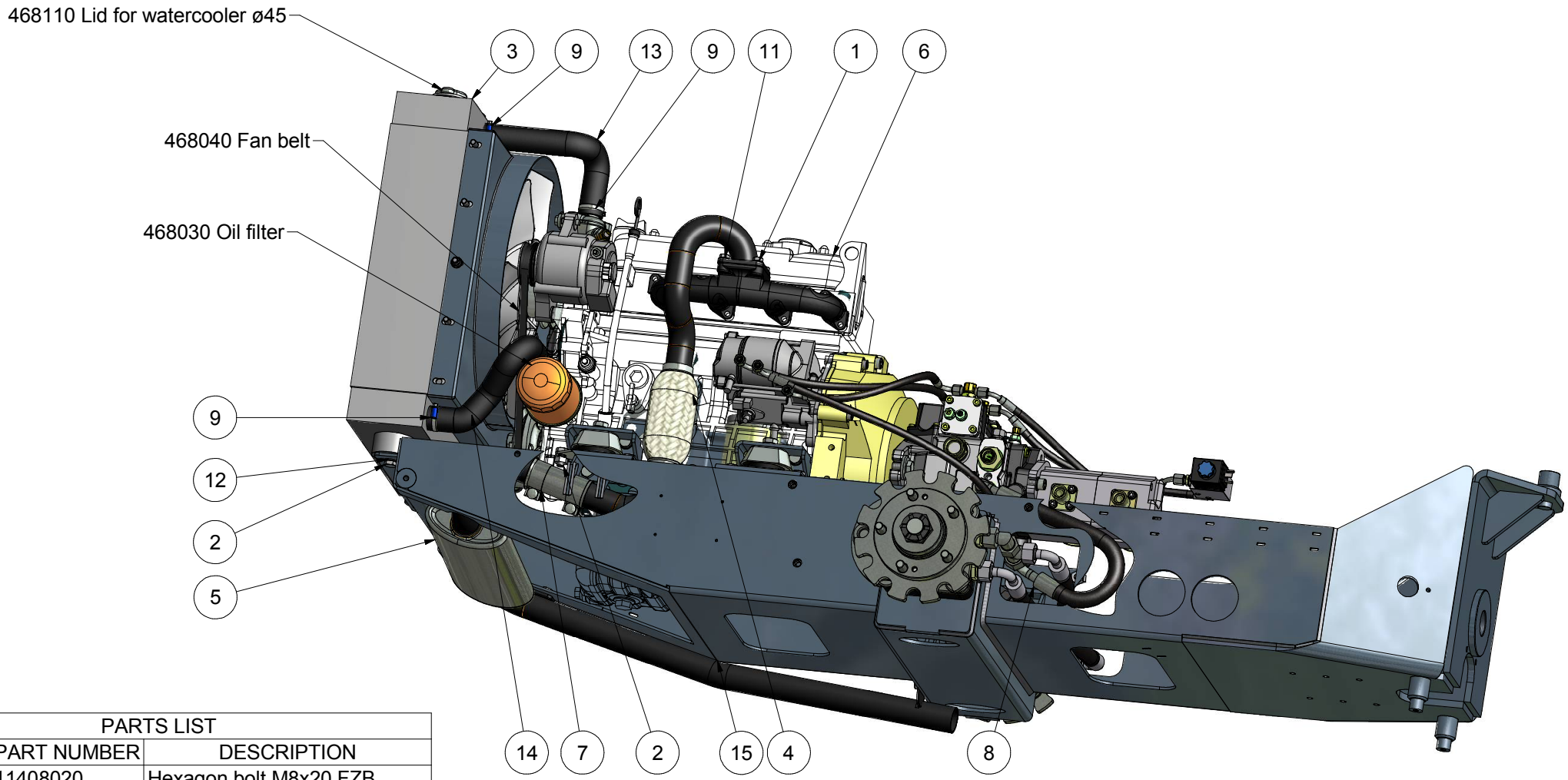

PARTS LIST			
ITEM	QTY	PART NUMBER	DESCRIPTION
1	6	11408020	Hexagon bolt M8x20 FZB
2	10	11410020	Hexagon bolt M10x20 FZB
3	1	250099	Cooler unit
4	1	250104	Exhaust assembly 1
5	1	250105	Exhaust assembly 2
6	1	250127	Motor assembly
7	1	250131	Pipe connector Ø38
8	1	250229	Hydraulic hose no 18
9	4	474010	Hose clamp 25-35
10	6,0 l	476810	Cooling fluid
11	6	82108000	Washer M8 FZB
12	2	82110000	Washer M10 FZB
13	1	M100033	Upper cooling hose
14	1	M100034	Lower cooling hose
15	1	M100046	Base assembly 1 PU

REVISION HISTORY			
REV	DESCRIPTION	DATE	APPROVED
A	Made	09-12-2011	KC
B	Part list updated	03-05-2013	KC
C	Part list updated	04-12-2014	C

Alle kanter reifes
Breake all edges

This document is strictly confidential and must on no ground be reproduced or shared with third parties.
HEDENSTED GRUPPEN A/S

Hedensted Gruppen

Scale: 1 : 6	Ikke angivet tolerancer iht./ Not specificed tolerance according to: DS/ISO 2768-m	Sheet size: A3
	Overfl. beskaffenhed/Surface properties: No	Sheet: 1 /2
Part No.: M100056	Material:	
Description: Base assembly 2 PU		
Description:		

PARTS LIST			
ITEM	QTY	PART NUMBER	DESCRIPTION
1	1	250091	Combi cooler
2	2	250136	Tension brace for cooler
3	2	17908000	Self-locking nut M8 FZB
4	1	250107	Fan Cover
5	1	477126	Male stud 22L 3/4" DM
6	2	82108000	Washer M8 FZB
7	1	477072	Adjustible tee SL15 L
8	1	477124	Male stud Ø15-L 3/4 DM

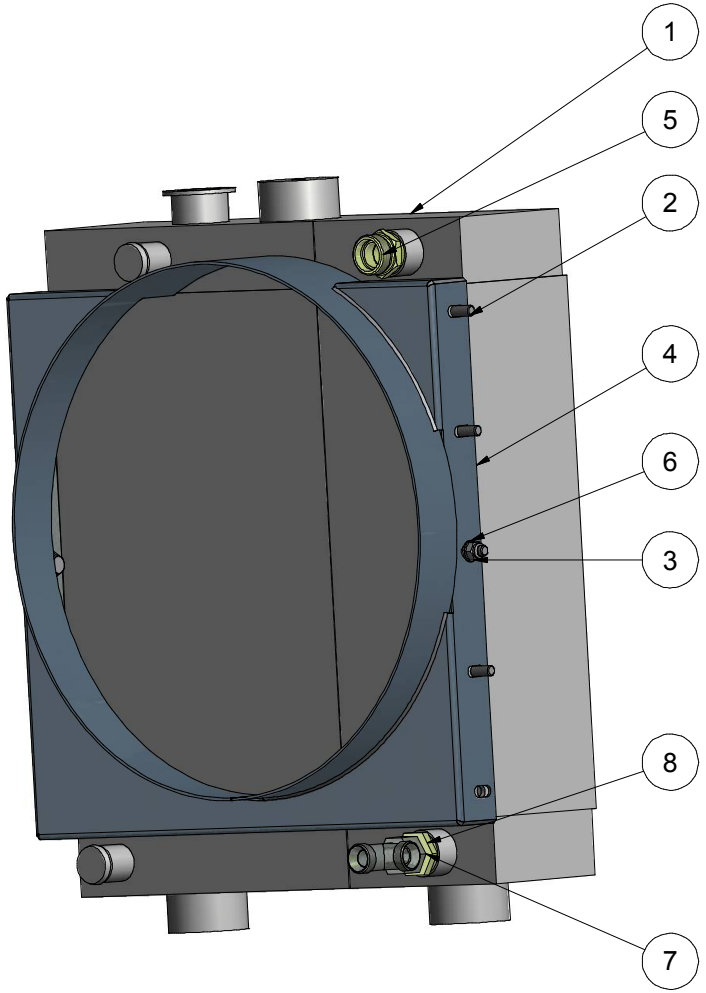

Alle kanter reifes
Breake all edges

REV	DESCRIPTION	DATE	APPROVED
A	Made	12-12-2011	KC

REVISION HISTORY

The document is strictly confidential and must not be issued to third parties without written consent of HEDENSTED GRUPPEN A/S

Hedensted Gruppen

Scale: 1 : 4	Ikke angivet tolerancer iht./ Not specificed tolerance according to: DS/ISO 2768-m	Sheet size: A3
	Overfl. beskaffenhed/Surface properties: No	Sheet: 1 /1
Part No.: 250099	Material:	
Description: Cooler unit		
Description:		

PARTS LIST			
ITEM	QTY	PART NUMBER	DESCRIPTION
1	2	10210030	Bolt Unbraco cyl 10x30 FZB
2	1	250152	Hydrostat V250
3	1	250187	O-ring shore NB 70 SAE A
4	2	82110000	Washer M10 FZB
5	1	M100128	Double pump14-4

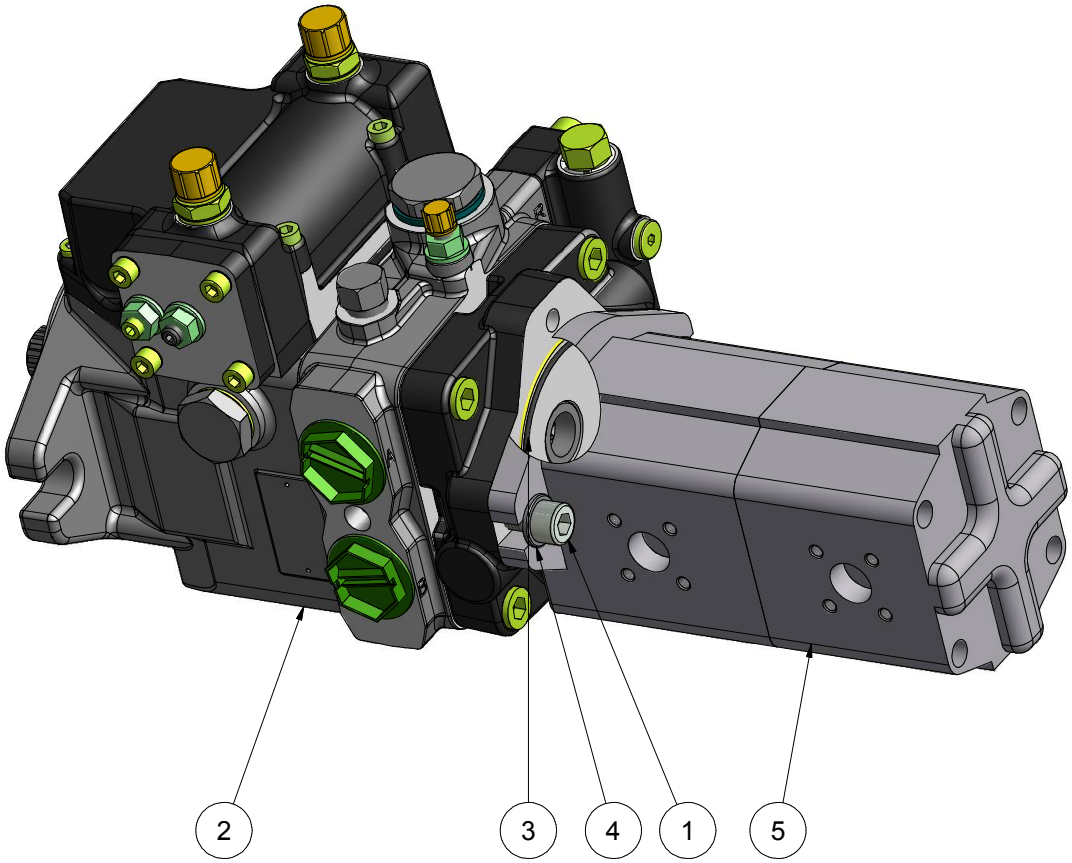

Alle kanter reifes
Breake all edges

REV	DESCRIPTION	DATE	APPROVED
A	Made	07-01-2013	KC

REVISION HISTORY

This document is strictly confidential and must on no ground be reproduced or shared with others.
HEDENSTED GRUPPEN A/S

Hedensted Gruppen

Scale: 1 : 2	Ikke angivet tolerancer iht./ Not specificed tolerance according to: DS/ISO 2768-m	Sheet size: A3
	Overfl. beskaffenhed/Surface properties: No	Sheet: 1 /1
Part No.: M100343 Pump assembly	Material:	
Description:		
Description:		

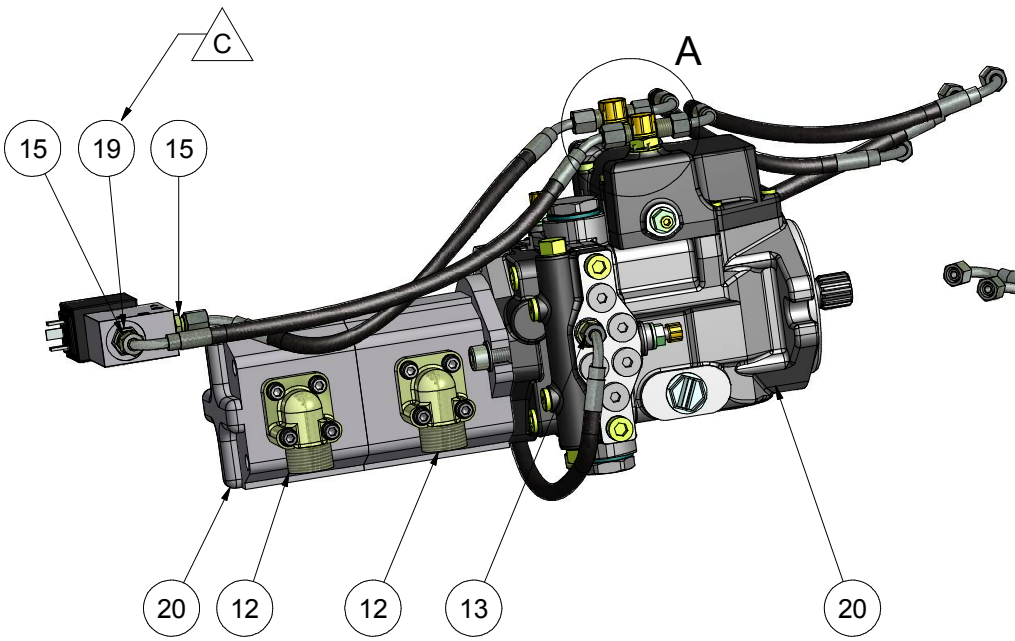

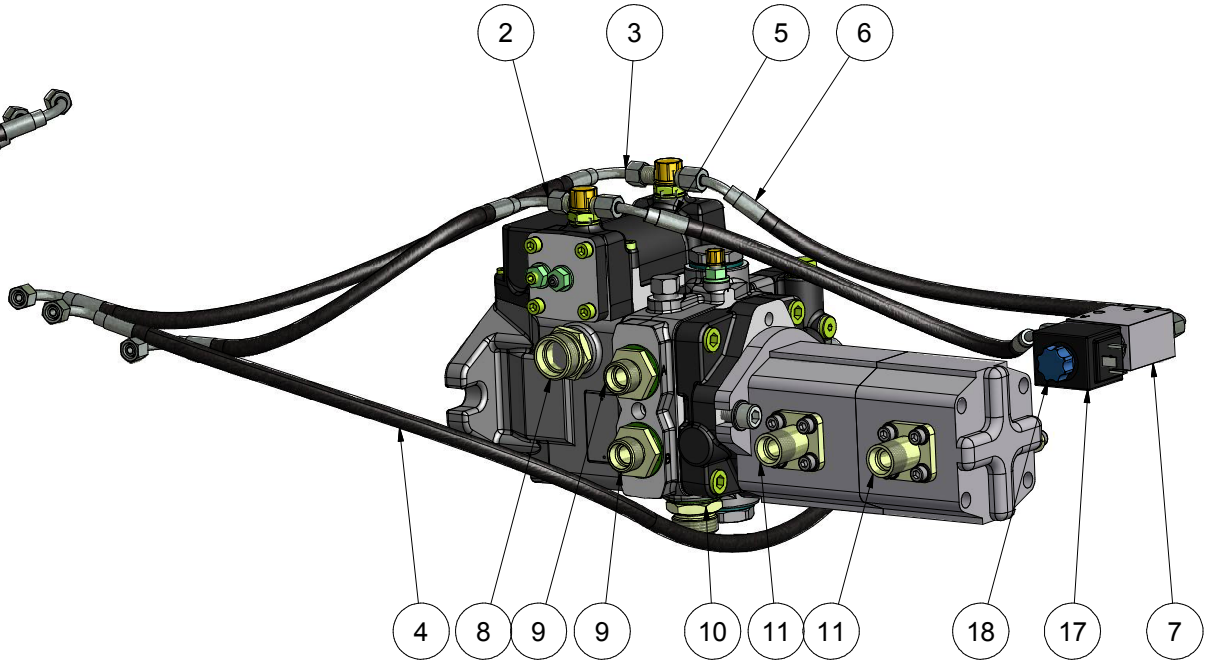

PARTS LIST			
ITEM	QTY	PART NUMBER	DESCRIPTION
1	2	216783	Reducing bushing 1/4"x1/8"
2	1	250219	Hydraulic hose no 8
3	1	250220	Hydraulic hose no 9
4	1	250221	Hydraulic hose no 10
5	1	250239	Hydraulic hose No 26
6	1	250240	Hydraulic hose No 27
7	1	423570	Alu valveblock pipe mounted
8	1	424069	Male stud 22L 1/2" DM
9	2	477124	Male stud Ø15-L 3/4 DM
10	1	477126	Male stud 22L 3/4" DM
11	2	M100054	Flange straight 15L
12	2	M100055	Flange for pump 22L
13	1	M100071	Male stud 6L 1/4"
14	2	M100107	Nozzle M6 Ø 0,8
15	2	M100224	Male stud Ø6L 1/8"
16	2	M100229	Tee Ø6L 1-8 K-DM
17	1	M100233	Solenoid 12v DC Ø13
18	1	M100234	Cartridge valve NC
19	2	M100235	Nipple adabter 3/8" 1/8"
20	1	M100343	Pump assembly

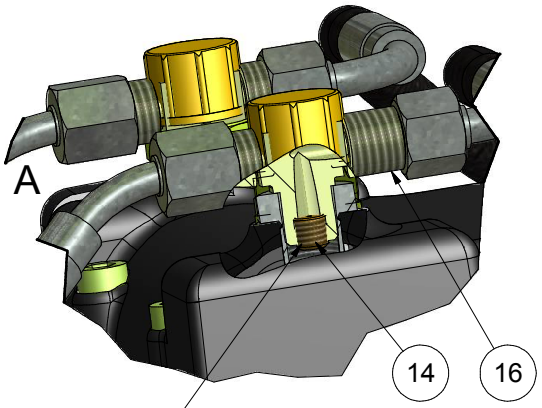

M6 thread has to be made 8mm deep
Seal with hydraulic liquid seal
Clean totaly Subsequent

REV	DESCRIPTION	DATE	APPROVED
A	Made	09-12-2011	KC
B	Fittings changed	23-03-2012	KC
C	Part list updated	19-12-2014	KC

REVISION HISTORY

Alle kanter reifes
Breake all edges

This document is strictly confidential and must on no way be used or copied without written consent.
HEDENSTED GRUPPEN A/S

Hedensted Gruppen

Scale: 1 : 3,5	Ikke angivet tolerancer iht./ Not specificed tolerance according to: DS/ISO 2768-m	Sheet size: A3
	Overfl. beskaffenhed/Surface properties: No	Sheet: 1 /2
Part No.: M100052	Material:	
Description: Pump assenbly for PU		
Description:		

PARTS LIST			
ITEM	QTY	PART NUMBER	DESCRIPTION
1	1	10205010	Bolt.unbraco cyl.5x10 FZB
2	9	10208055	Bolt Unbrako cyl 8x55 FZB
3	2	11408025	Hexagon bolt M8x25 FZB
4	4	11412025	Hexagon bolt M12x25 FZB
5	2	11412035	Hexagon bolt M12x35 FZB
6	1	17905000	Self-locking nut M5 FZB
7	2	17908000	Self-locking nut M8 FZB
8	16	21010525	Hexagon bolt m10x1,25x25 FZB
9	1	250092	Centa clutch housing
10	2	250102	Cushyfloat 17-1600-02
11	2	250103	Cushyfloat 17-1600-03
12	4	250122	Ingine support
13	1	250132	Plate for Throttle cable
14	1	250190	Heat sensor AMA
15	2	4212000	Washe type TBRSB 13x36x6 FZB
16	1	423419	Cable clamp
17	1	423802	Nipple for inner cable
18	1	425016	Clutch centa CFKE085-16-32-Z13
19	3	430230	Bolt Unbrako Cyl 10x1,25x35FZB
20	2	430231	Bolt unbraco cyl 10x1,25x60
21	1	468020	Fuel-Kit nr 184
22	3	474006	Hose clamp 11-16
23	1	50621045	Extension spring 1-9x45
24	16	82110000	Washer M10 FZB

PARTS LIST			
ITEM	QTY	PART NUMBER	DESCRIPTION
25	4	82112000	Washer M12 FZB
26	1	M100052	Pump assenbly for PU
27	1	M100105	Brace for fuel kit
28	1	M100109	Kubota 1505
29	1	M100996	Hose clamp Ø9

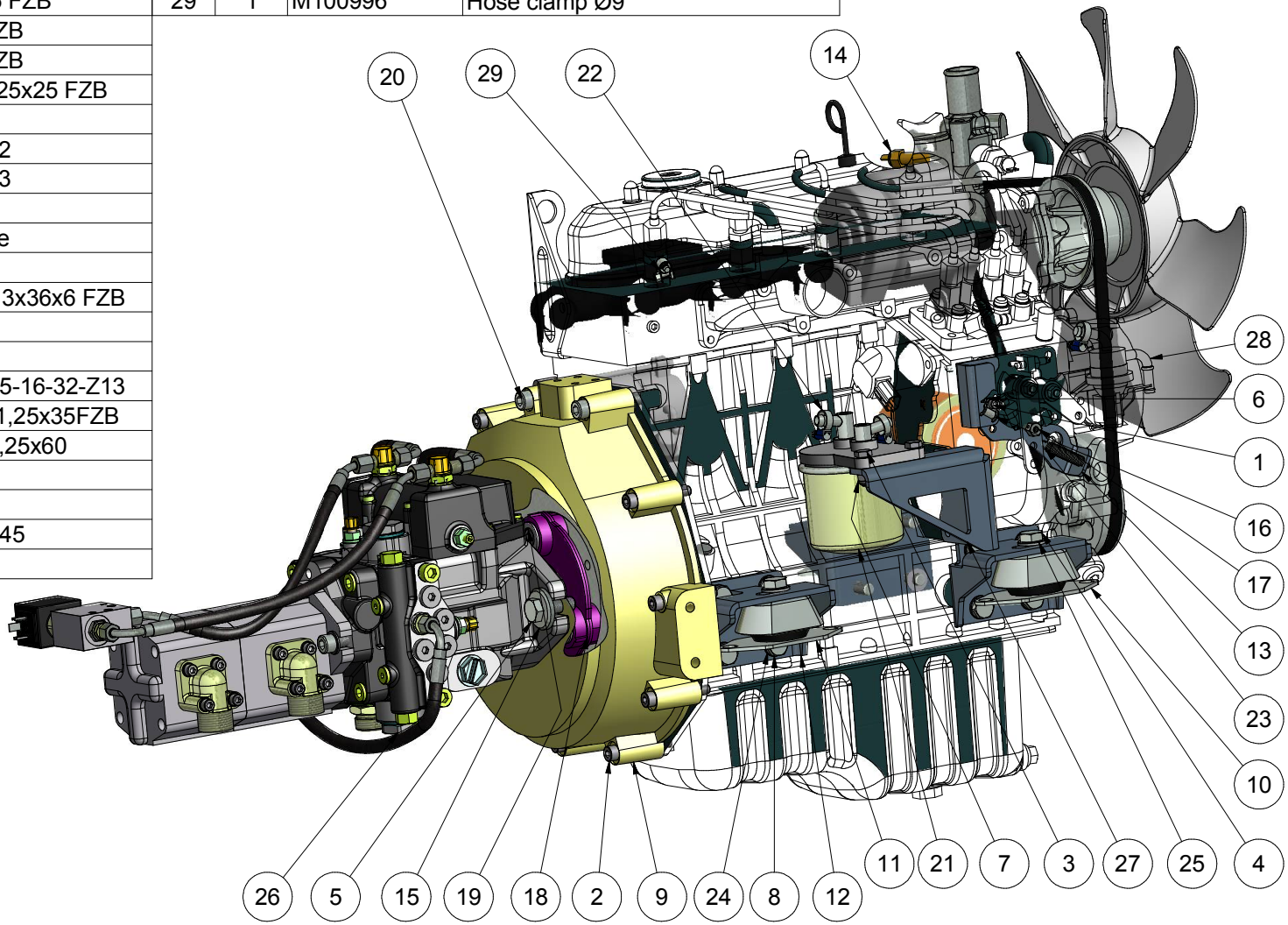

Alle kanter reifes
Breake all edges

REV	DESCRIPTION	DATE	APPROVED
A	Made	12-12-2011	KC
B	Part List updated	11-06-2013	KC
C	Part List updated	26-02-2015	KC

REVISION HISTORY

This document is strictly confidential and must on no ground be reproduced, copied or shared with others.
HEDENSTED GRUPPEN A/S

Hedensted Gruppen

Scale: 1 : 4	Ikke angivet tolerancer iht./ Not specificed tolerance according to: DS/ISO 2768-m	Sheet size: A3
	Overfl. beskaffenhed/Surface properties: No	Sheet: 1 /1
Part No.: 250127	Material:	
Description: Motor assembly		
Description:		

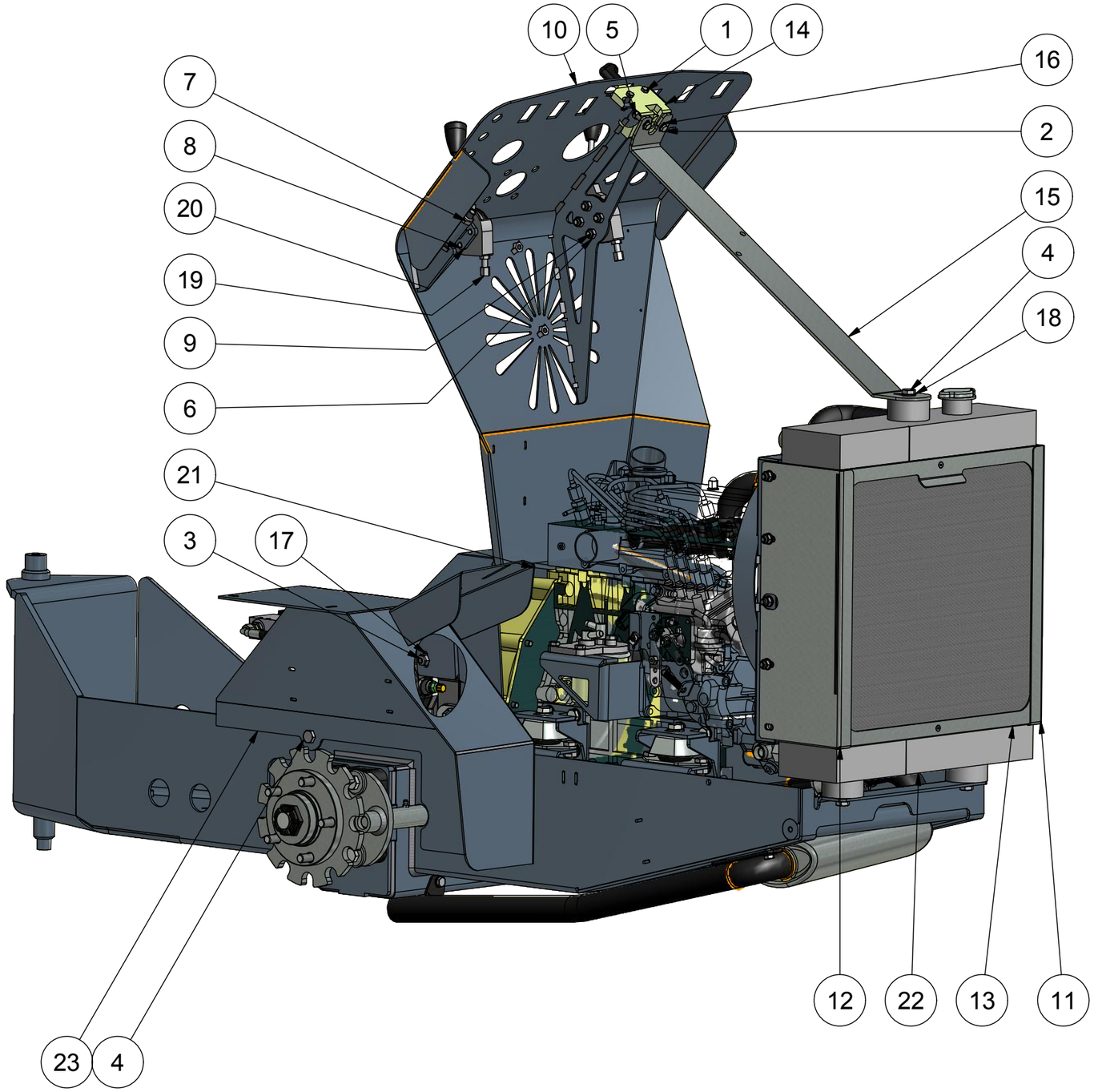

PARTS LIST			
ITEM	QTY	PART NUMBER	DESCRIPTION
1	2	11406025	Hexagon bolt M6x25 FZB
2	2	11406030	Hexagon bolt M6x30 FZB
3	4	11408016	Hexagon bolt M8x16 FZB
4	7	11410020	Hexagon bolt M10x20 FZB
5	4	17906000	Self-locking nut M6 FZB
6	12	17908000	Self-locking nut M8 FZB
7	1	17910000	Self-locking nut M10 FZB
8	4	20408016	Hexagon countersunk 8x16 FZB
9	4	20408020	Hexagon countersunk M8x20 FZB
10	1	250094	Console for steering
11	1	250097	Cooler cover part 1
12	1	250098	Cooler cover part 2
13	1	250111	Filter assembly
14	1	250125	Lock for motor hood
15	1	25442	Frame part 5
16	4	82106000	Washer M6 FZB
17	12	82108000	Washer M8 FZB
18	1	82110000	Washer M10 FZB
19	2	M100016	Throtel leaver
20	1	M100019	Brake brace
21	1	M100020	Left mudguard
22	1	M100056	Base assembly 2 PU
23	1	M100058	Mud guard right

REV	DESCRIPTION	DATE	APPROVED
A	Made	09-12-2011	KC

REVISION HISTORY

Alle kanter reifes
Breake all edges

This document is strictly confidential and must on no account be copied or disclosed to any third person.

HEDENSTED GRUPPEN A/S

Hedensted Gruppen

Scale: 1 : 7	Ikke angivet tolerancer iht./ Not specified tolerance according to: DS/ISO 2768-m		Sheet size: A3
	Overfl. beskaffenhed/Surface properties: No		Sheet: 1 /2
Part No.: M100057	Material:		
Description: Base assembly 3 PU			
Description:			

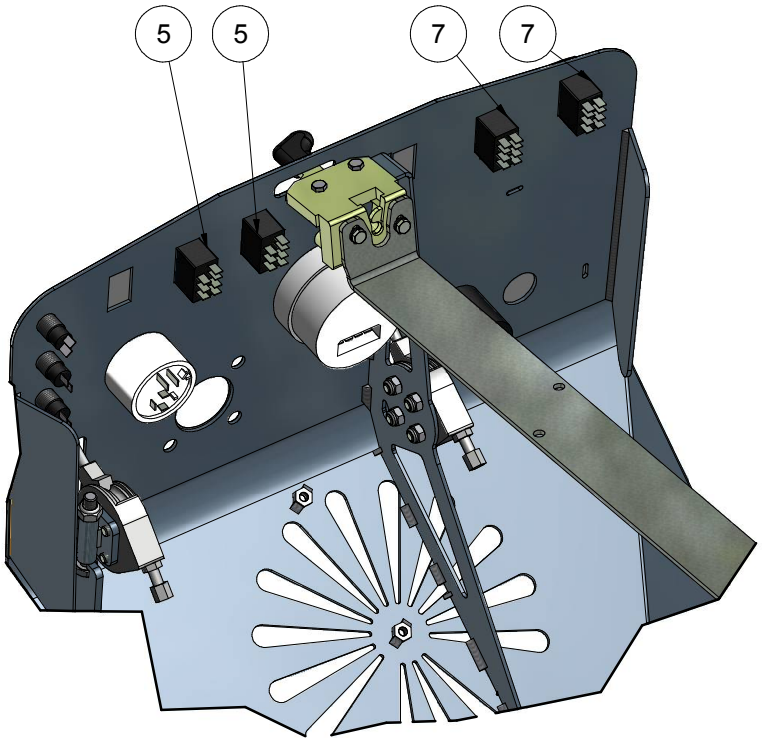

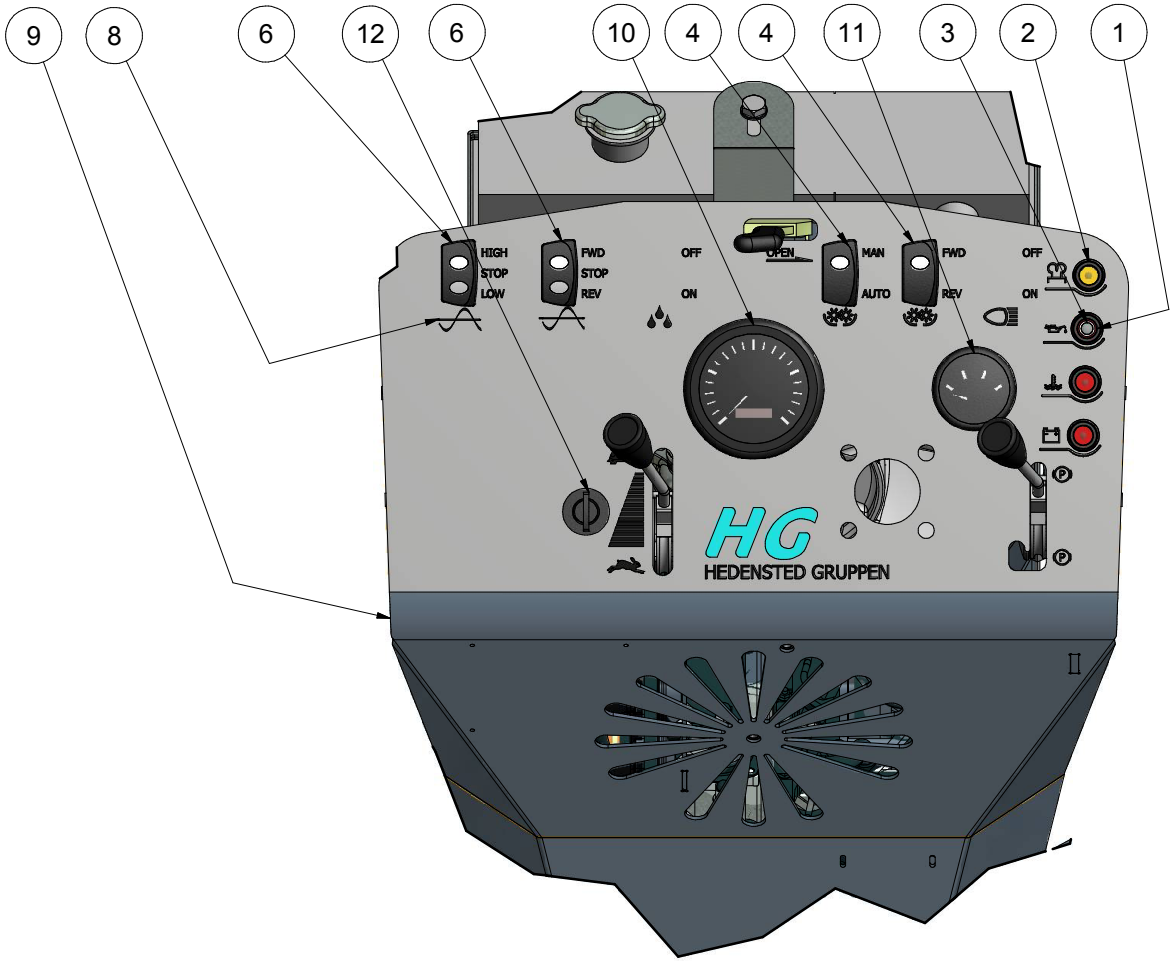

PARTS LIST			
ITEM	QTY	PART NUMBER	DESCRIPTION
1	3	423667	Indicator lamp, red
2	1	423669	Indicator lamp_yellow
3	4	475530	Light bulb 12v 2W
4	2	477981	Aktuator for 477980 and 477982
5	2	477982	Rocker switch ON-ON
6	2	477983	Aktuator for 477985
7	2	477985	Rocker switch OFF/ON/ON
8	1	M100021	Label for dashboard
9	1	M100057	Base assembly 3 PU
10	1	M100060	AMA Rpm-hour meter
11	1	M100061	AMA temperature gauge
12	1	M100063	AMA Innition lock

REVISION HISTORY			
A	Made	09-12-2011	KC
B	Contacts has been changed	06-03-2012	KC
C	Contacts has been changed	19-06-2012	KC
D	Part List updated	14-11-2014	KC
REV	DESCRIPTION	DATE	APPROVED

Alle kanter reifes
Breake all edges

This document is strictly confidential and must on no account be copied or made available to others.
HEDENSTED GRUPPEN A/S

Hedensted Gruppen

Scale: 1 : 8	Ikke angivet tolerancer iht./ Not specificed tolerance according to: DS/ISO 2768-m	Sheet size: A3
	Overfl. beskaffenhed/Surface properties: No	Sheet: 1 /1
Part No.: M100062	Material:	
Description: Base assembly 4 PU		
Description:		

PARTS LIST			
ITEM	QTY	PART NUMBER	DESCRIPTION
1	2	11408016	Hexagon bolt M8x16 FZB
2	1	11408025	Hexagon bolt M8x25 FZB
3	1	17908000	Self-locking nut M8 FZB
4	0,400 m	216041	Flex hose Ø45 FD PUR 7
5	0,600 m	216042	Suction hose Pur l. 50mm
6	1	250100	Plate for air flow
7	2	250130	Pipe 1 for air filter
8	3,000 m	250192	Outer cable Ø1,9 Ø6
9	4,000 m	250193	Inner cable Ø1,9mm
10	4	250194	Cab for cable
11	1	468010	Air filter kit nr 198
12	7	474016	Hose clamp 40-55
13	1	479080	Ganter star handle
14	2	82108000	Washer M8 FZB
15	1	M100062	Base assembly 4 PU

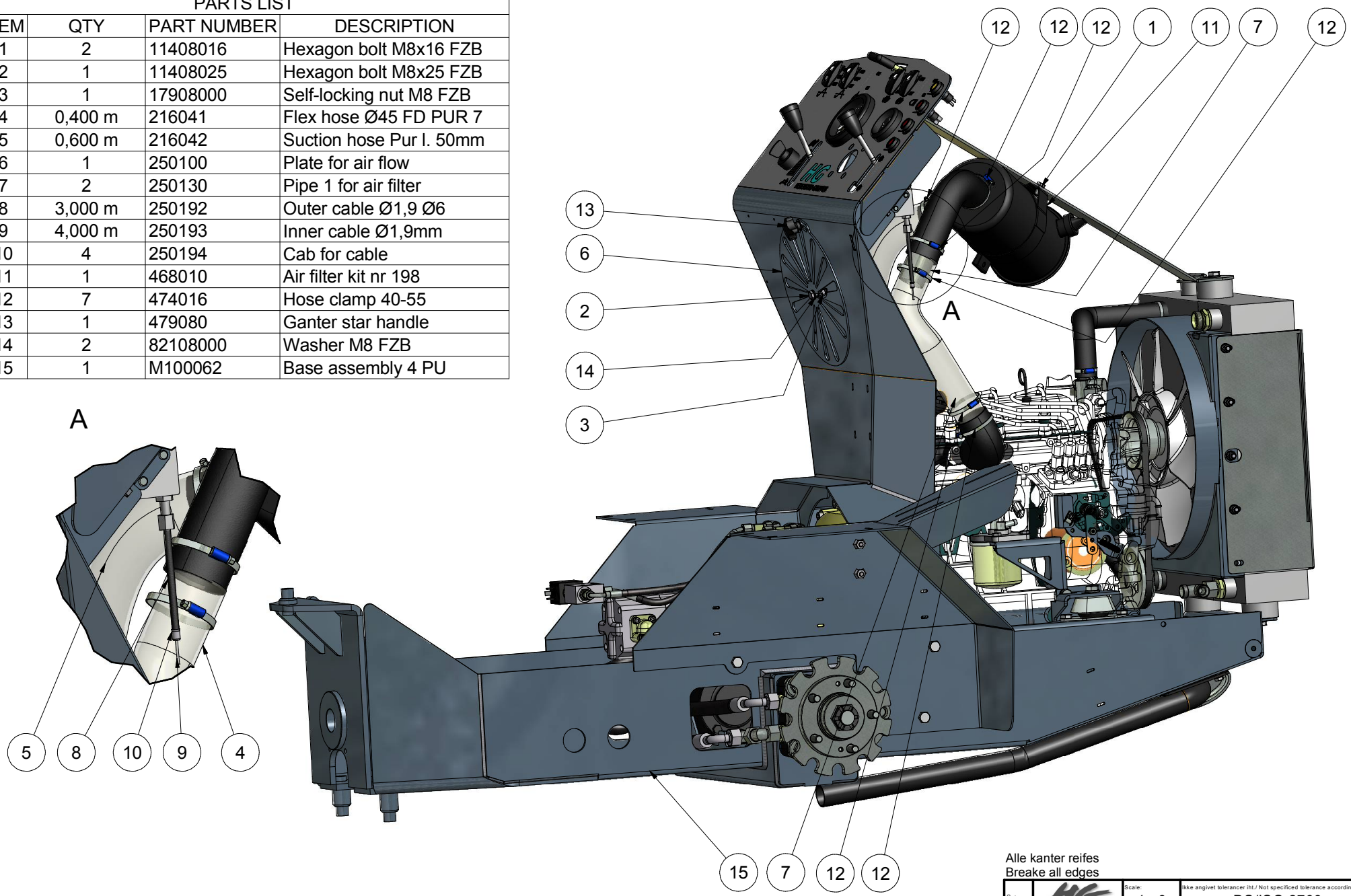

Alle kanter reifes
Breake all edges

REV	DESCRIPTION	DATE	APPROVED
A	Made	09-12-2011	KC
B	Partlist updated	13-05-2013	KC

REVISION HISTORY

This document is strictly confidential and must on no ground be reproduced, copied or transferred to other parties.
HEDENSTED GRUPPEN A/S

Hedensted Gruppen

Scale: 1 : 6	Ikke angivet tolerancer iht./ Not specificed tolerance according to: DS/ISO 2768-m	Sheet size: A3
	Overfl. beskaffenhed/Surface properties: No	Sheet: 1 /1
Part No.: M100065	Material:	
Description: Base assembly 5 PU		
Description:		

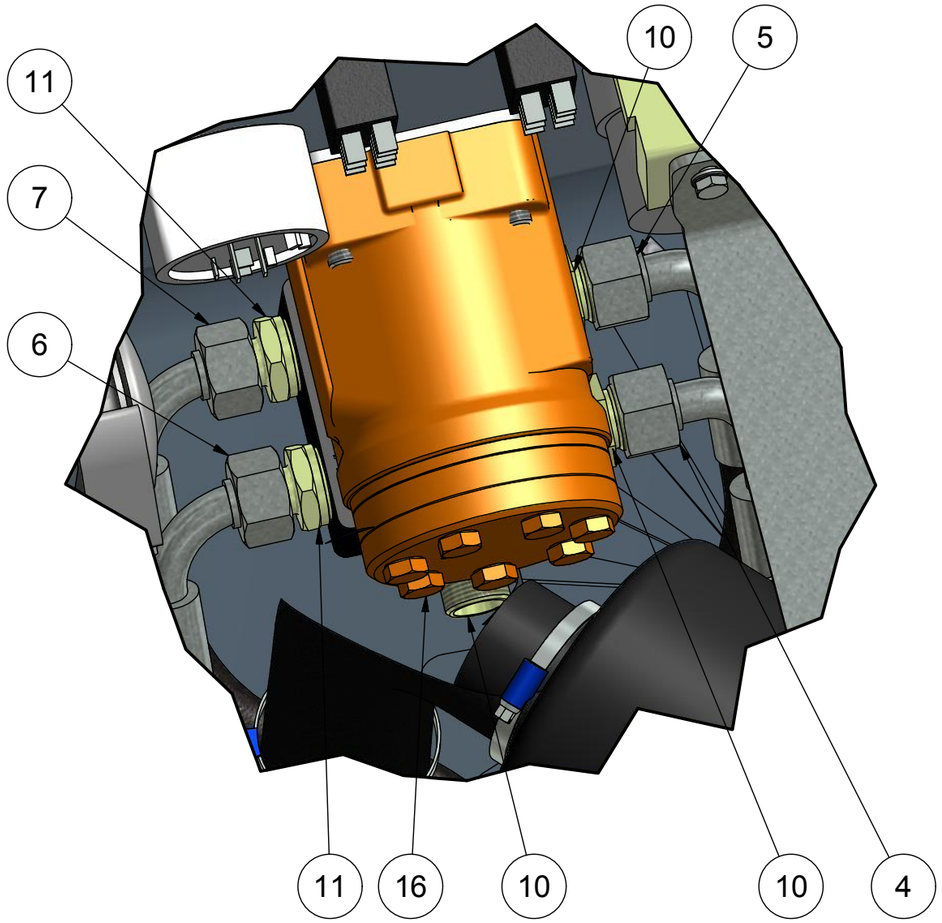

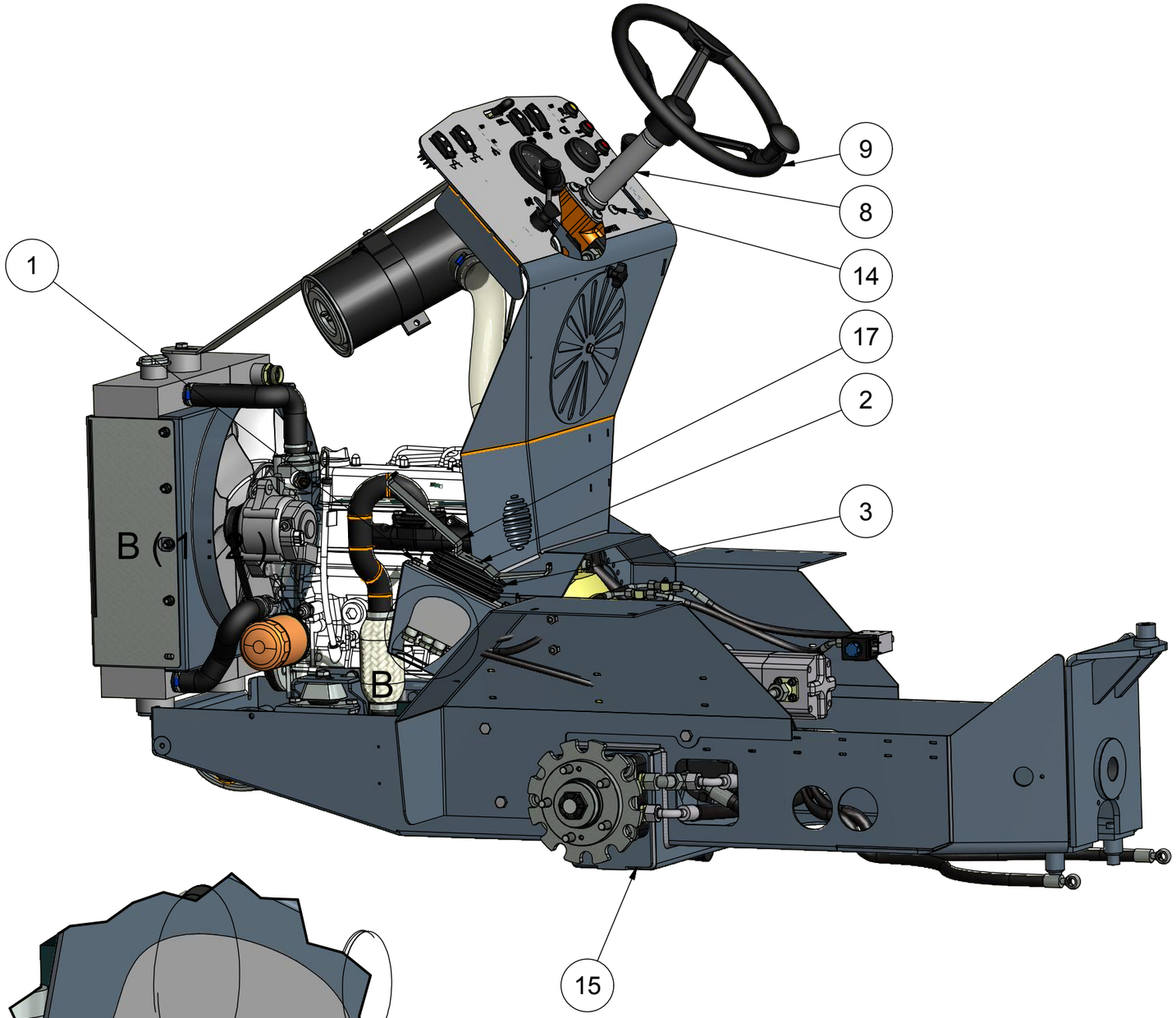

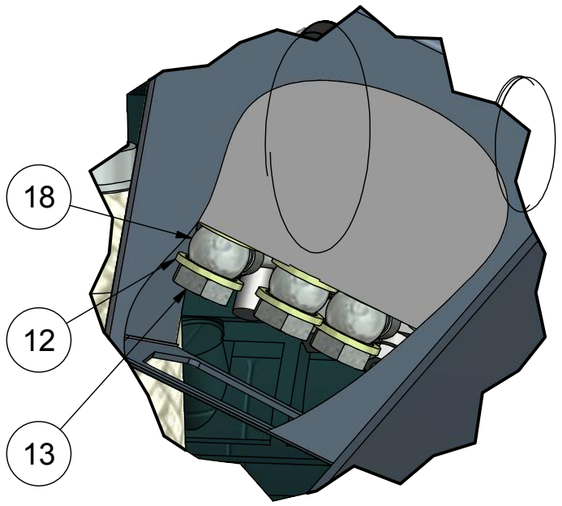

PARTS LIST			
ITEM	QTY	PART NUMBER	DESCRIPTION
1	4	11408012	Hexagon bolt M8x12 FZB
2	2	20406012	Hexagon countersunk 6x12 FZB
3	1	250151	Hydraulic pedal
4	1	250213	Hydraulic hose no 2
5	1	250223	Hydraulic hose no 12
6	1	250227	Hydraulic hose no 16
7	1	250228	Hydraulic hose no 17
8	1	423970	Steering column OTPB 164
9	1	425002	Steering wheel with nop Ø360
10	3	477120	Male stud Ø15-L 1/2" DM
11	2	477128	Male stud 12L 1/2"
12	8	477161	Bopnded seal washer 1/4"
13	4	477221	Connector 1/4" Banjo
14	4	76010040	Bolt buttonhead 10x40 FZB
15	1	M100065	Base assembly 5 PU
16	1	M100066.	Orbitrol 50ccm w priority valve
17	1	M100068	Foot pedal
18	4	M100402	Banjo connector

REV	DESCRIPTION	DATE	APPROVED
A	Made	09-12-2011	KC
B	Part List updated	15-05-2013	KC

REVISION HISTORY

Alle kanter reifes
Breake all edges

This document is strictly confidential and must on no account be copied or disclosed to any third person.
HEDENSTED GRUPPEN A/S

Hedensted Gruppen

Scale: 1 : 8	Ikke angivet tolerancer iht./ Not specificed tolerance according to: DS/ISO 2768-m		Sheet size: A3
	Overfl. beskaffenhed/Surface properties: No		Sheet: 1 /2
Part No.: M100067	Material:		
Description: Base assembly 6 PU			
Description:			

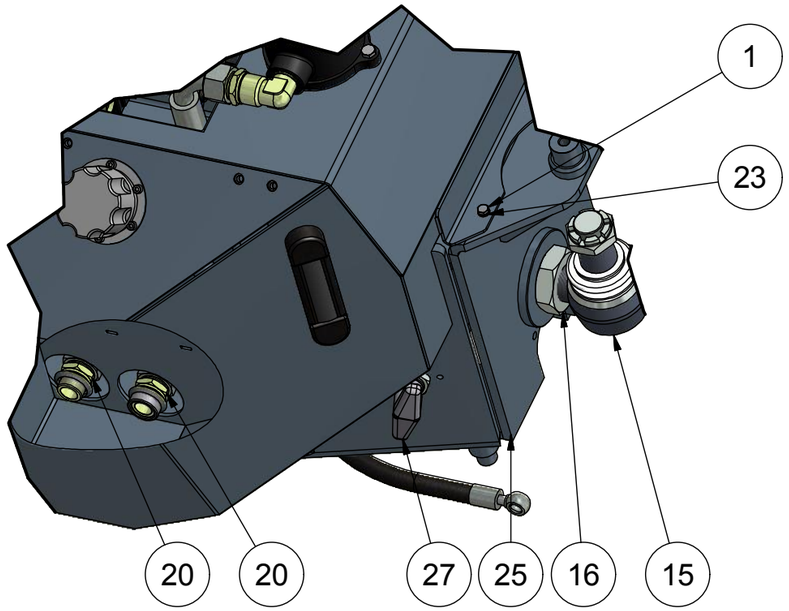

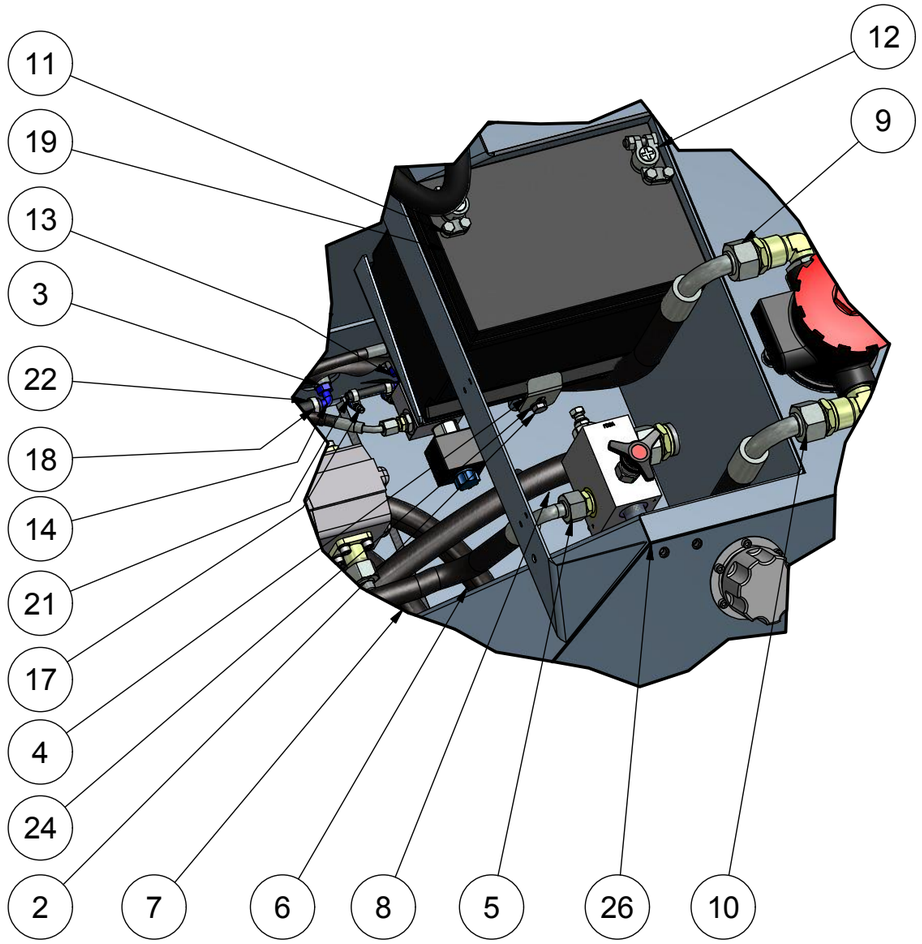

PARTS LIST			
ITEM	QTY	PART NUMBER	DESCRIPTION
1	2	11406012	Hexagon bolt M6x12 FZB
2	5	11408016	Hexagon bolt M8x16 FZB
3	2	216728	Connector 1-4male 1-4 female
4	1	250137	Tension plate for battery
5	1	250212	Hydraulic hose no 1
6	1	250214	Hydraulic hose no 3
7	1	250215	Hydraulic hose no 4
8	1	250216	Hydraulic hose no. 5
9	1	250217	Hydraulic hose no 6
10	1	250218	Hydraulic hose no 7
11	1	421419	Negative terminal
12	1	423529	Positive terminal
13	1	423900	Elbow hose connector Ø5x1-4
14	1	423902	Elbow hose connector Ø8x1-4
15	1	425235	Ball bearing SC336010010
16	2	425240	Nut M38x1,5 FZB
17	2	474000	Hose clamp 7-11
18	2	474006	Hose clamp 11-16
19	1	476018	Battery 75Ah
20	2	477126	Male stud 22L 3/4" DM
21	1,7 m	479105	Petrolhose 5,5mm
22	2,0 m	479112	Petrolhose 8,0mm
23	2	82106000	Washer M6 FZB
24	5	82108000	Washer M8 FZB
25	1	M100067	Base assembly 6 PU
26	1	M100069	Hydraulic tank assembly
27	1	M100126	Circuit breaker

REVISION HISTORY			
REV	DESCRIPTION	DATE	APPROVED
A	Made	08-12-2011	KC
B	Part List updated	12-06-2013	KC

Alle kanter reifes
Breake all edges

This document is strictly confidential and must on no account be copied or disclosed to any third person.
HEDENSTED GRUPPEN A/S

Hedensted Gruppen

Scale: 1 : 6	Ikke angivet tolerancer iht./ Not specificed tolerance according to: DS/ISO 2768-m		Sheet size: A3
	Overfl. beskaffenhed/Surface properties: No		Sheet: 1 /2
Part No.: M100072	Material:		
Description: Base assembly 7 PU			
Description:			

PARTS LIST			
ITEM	QTY	PART NUMBER	DESCRIPTION
1	1	11408016	Hexagon bolt M8x16 FZB
2	8	20408016	Hexagon countersunk 8x16 FZB
3	2	207940	Hinge GN237-60-60
4	1	250080	Battery cover
5	1	250222	Hydraulic hose no 11
6	1	250233	Hydraulic hose no 22
7	1	423496	Cover for positive terminal
8	1	423497	Cover for gorund terminal
9	1	479080	Ganter star handle
10	2	82108000	Washer M8 FZB
11	1	M100072	Base assembly 7 PU
12	1	M100404	Seat lock

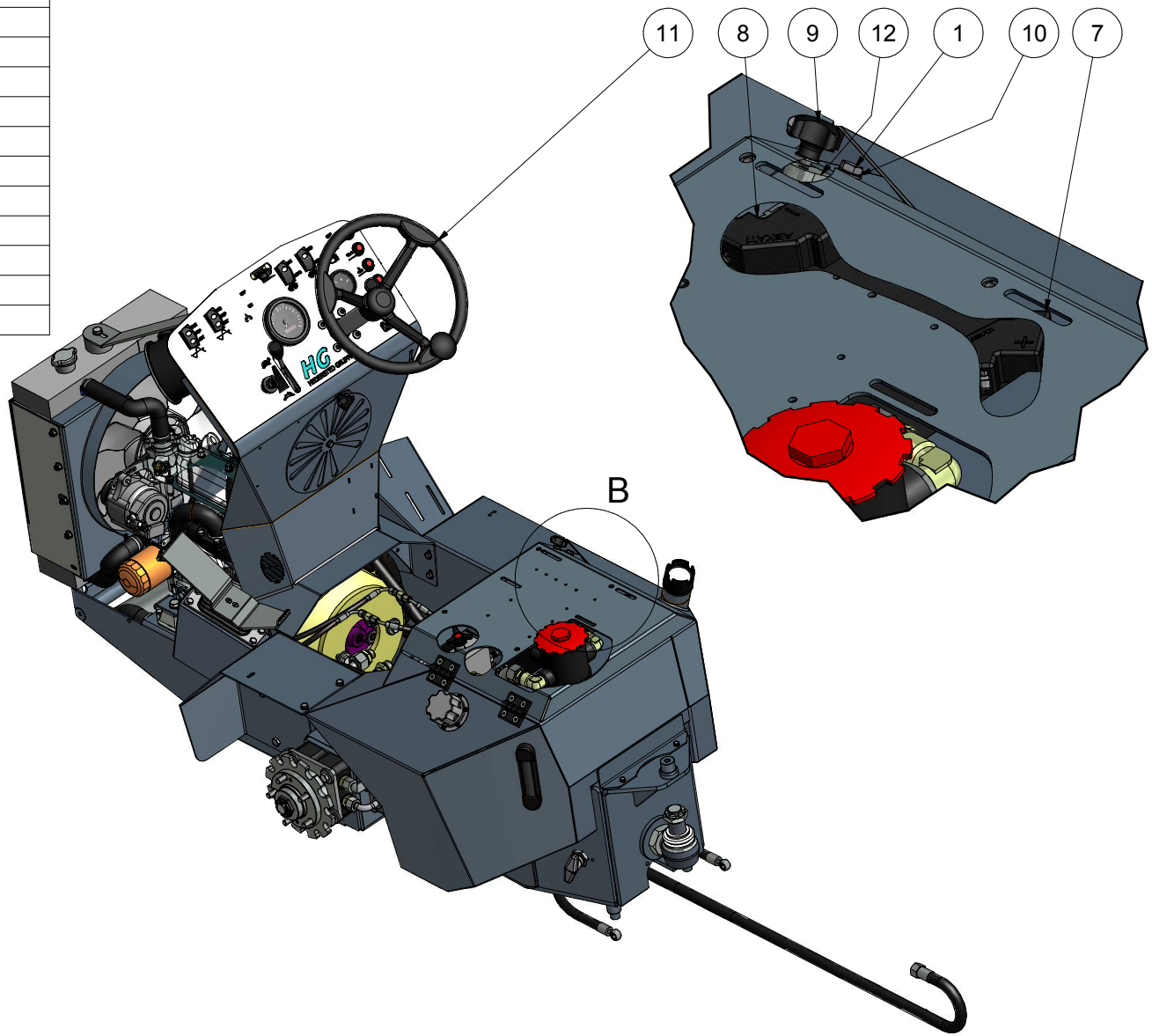

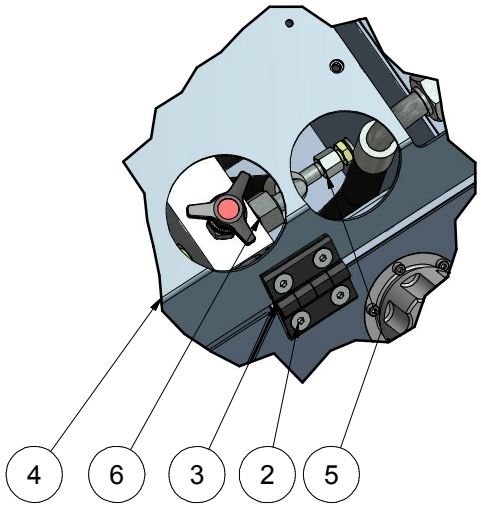

Alle kanter reifes
Breake all edges

REV	DESCRIPTION	DATE	APPROVED
A	Made	26-05-2011	KC
B	Part List updated	11-06-2013	KC

REVISION HISTORY

This document is strictly confidential and must on no reason be reproduced or shared with third parties.
HEDENSTED GRUPPEN A/S

Hedensted Gruppen

Scale: 1:10	Ikke angivet tolerancer iht./ Not specificed tolerance according to: DS/ISO 2768-m	Sheet size: A3
	Overfl. beskaffenhed/Surface properties: No	Sheet: 1 /1
Part No.: M100076	Material:	
Description: Base assembly 8 PU		
Description:		

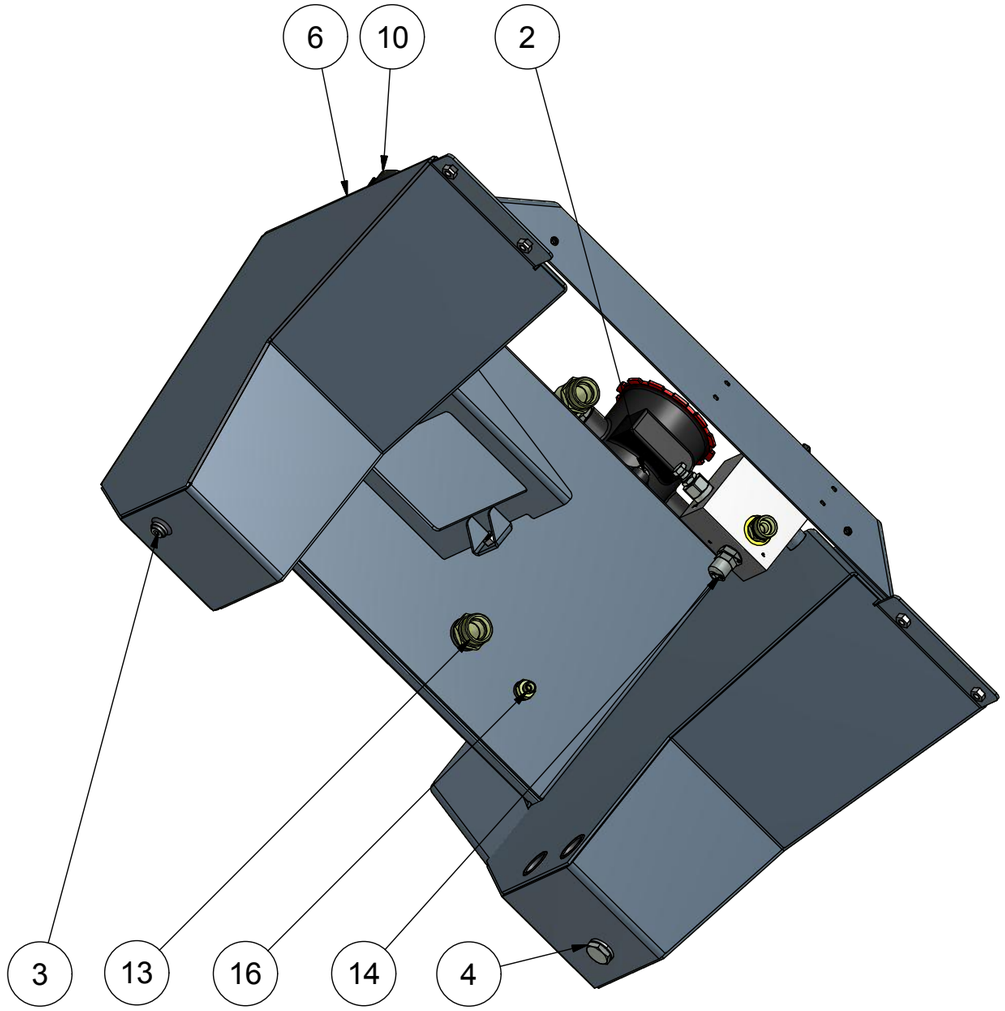

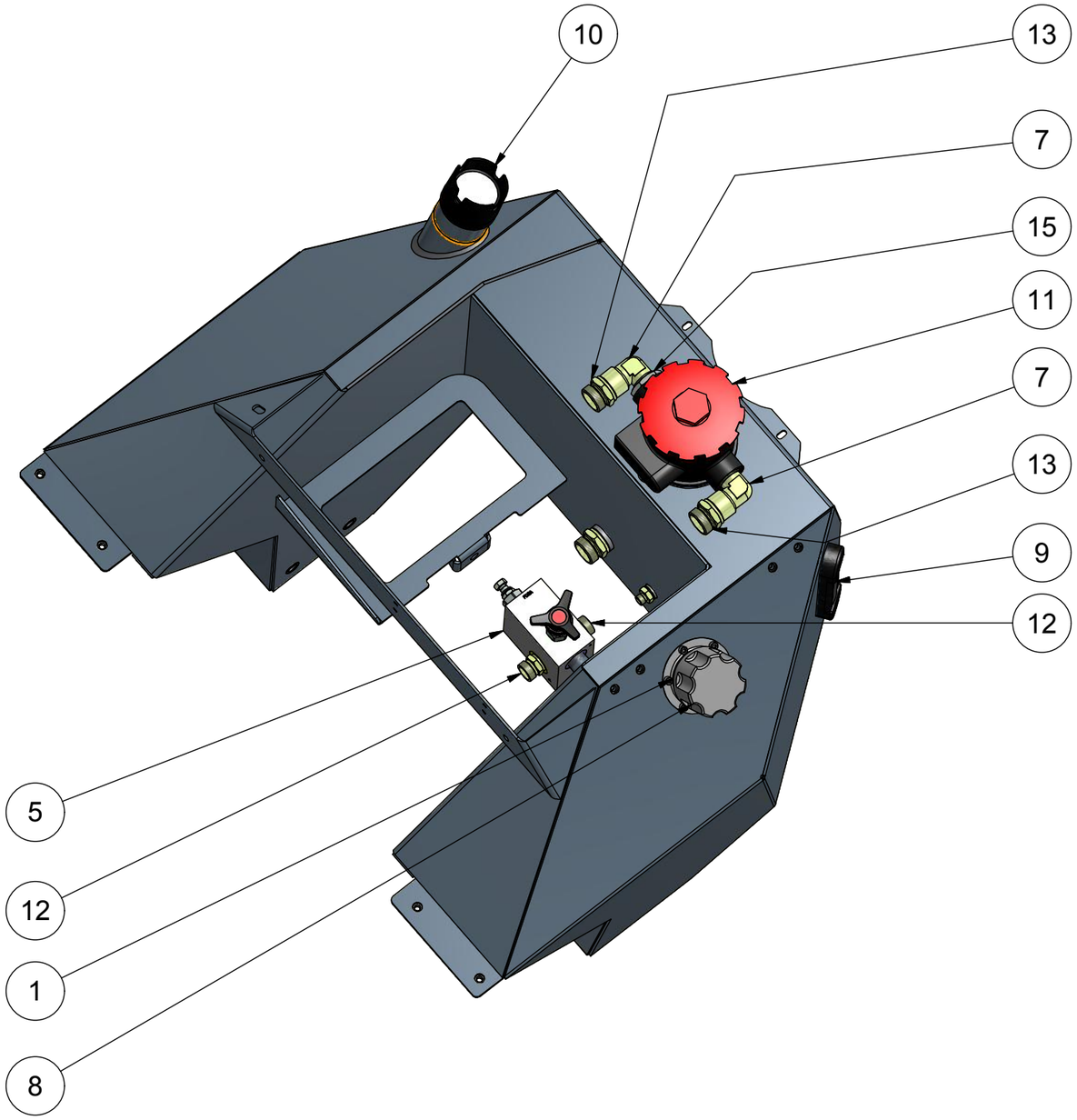

PARTS LIST			
ITEM	QTY	PART NUMBER	DESCRIPTION
1	6	10205012	Bolt unbrako cyl 5x12 FZB
2	2	11408020	Hexagon bolt M8x20 FZB
3	1	216743	Plug 1/4" inside hexagon
4	1	216741	Plug 1/2 for oil tank
5	1	250077	Assembly valve for flow adjustment
6	1	250120	Hydraulic and fuel tank
7	2	250149	Elbow 3-4 male-female
8	1	423459	Påfyldning HB70
9	1	423460	Oil level indicator
11	1	424532	Combo K041301
12	2	477117	Male stud 15L 3/8"
13	3	477126	Male stud 22L 3/4" DM
14	1	477229	Male test nipple 3/8" BSP
15	1	M100045	Reduction 1inch 3-4inch
16	1	M100071	Male stud 6L 1/4"
10	1	M100169	Fuel indicator

REVISION HISTORY			
A	Made	09-12-2011	KC
REV	DESCRIPTION	DATE	APPROVED

Alle kanter reifes
Breake all edges

This document is strictly confidential and must on no account be copied or disclosed to any third person.
HEDENSTED GRUPPEN A/S

Hedensted Gruppen

Scale: 1 : 6	Ikke angivet tolerancer iht./ Not specificed tolerance according to: DS/ISO 2768-m		Sheet size: A3
	Overfl. beskaffenhed/Surface properties: No		Sheet: 1 /2
Part No.: M100069	Material:		
Description: Hydraulic tank assembly			
Description:			

PARTS LIST			
ITEM	QTY	PART NUMBER	DESCRIPTION
1	1	250157	Valve block flow regulator
2	1	250150	Flow regulator
3	1	250161	Valve handle
4	1	250163	Valve overload

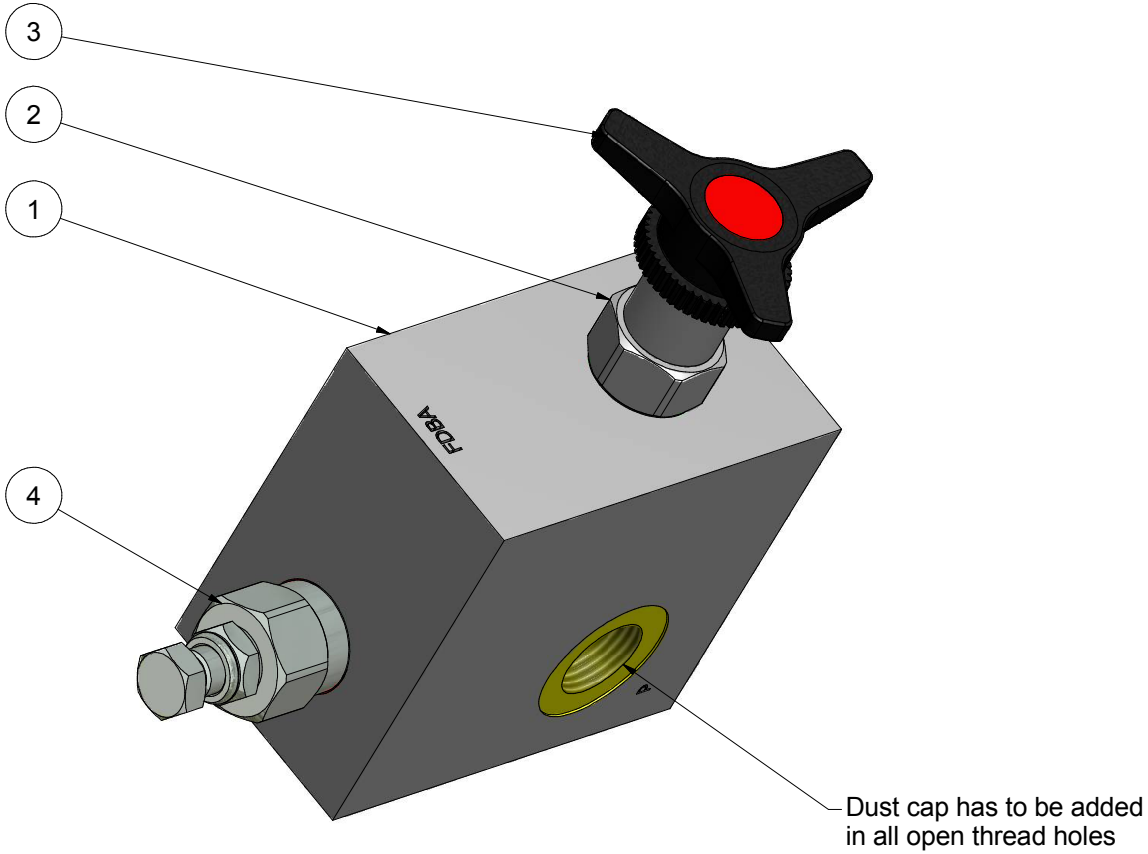

Alle kanter reifes
Breake all edges

A	Made	12-12-2011	KC
REV	DESCRIPTION	DATE	APPROVED
REVISION HISTORY			

This document is strictly confidential and must on no terms be reproduced or disclosed to third parties.
HEDENSTED GRUPPEN A/S

Hedensted Gruppen

Scale: 1 : 1	Ikke angivet tolerancer iht./ Not specificed tolerance according to: DS/ISO 2768-m	Sheet size: A3
	Overfl. beskaffenhed/Surface properties: No	Sheet: 1 /1
Part No.: 250077	Material:	
Description: Assembly valve for flow adjustment		
Description:		

PARTS LIST			
ITEM	QTY	PART NUMBER	DESCRIPTION
1	2	11410025	Hexagon bolt M10x25 FZB
2	1	250108	Feed tube assembly 1
3	2	4210000	Washe type TBRSB 10,5x28x6 FZB
4	1	472533	Blue Feed hose Kleber 45 mm
5	1	472560	Feedingbeak short 45mm
6	2	474215	Hose clamp ø55mm Goliath
7	10	479910	Wheel nut M12x1,5 NV22 60`FZB
8	1	M100076	Base assembly 8 PU
9	2	M100078	Hose clamp ø65mm
10	0,55 m	M10208	Fire hose white Ø63

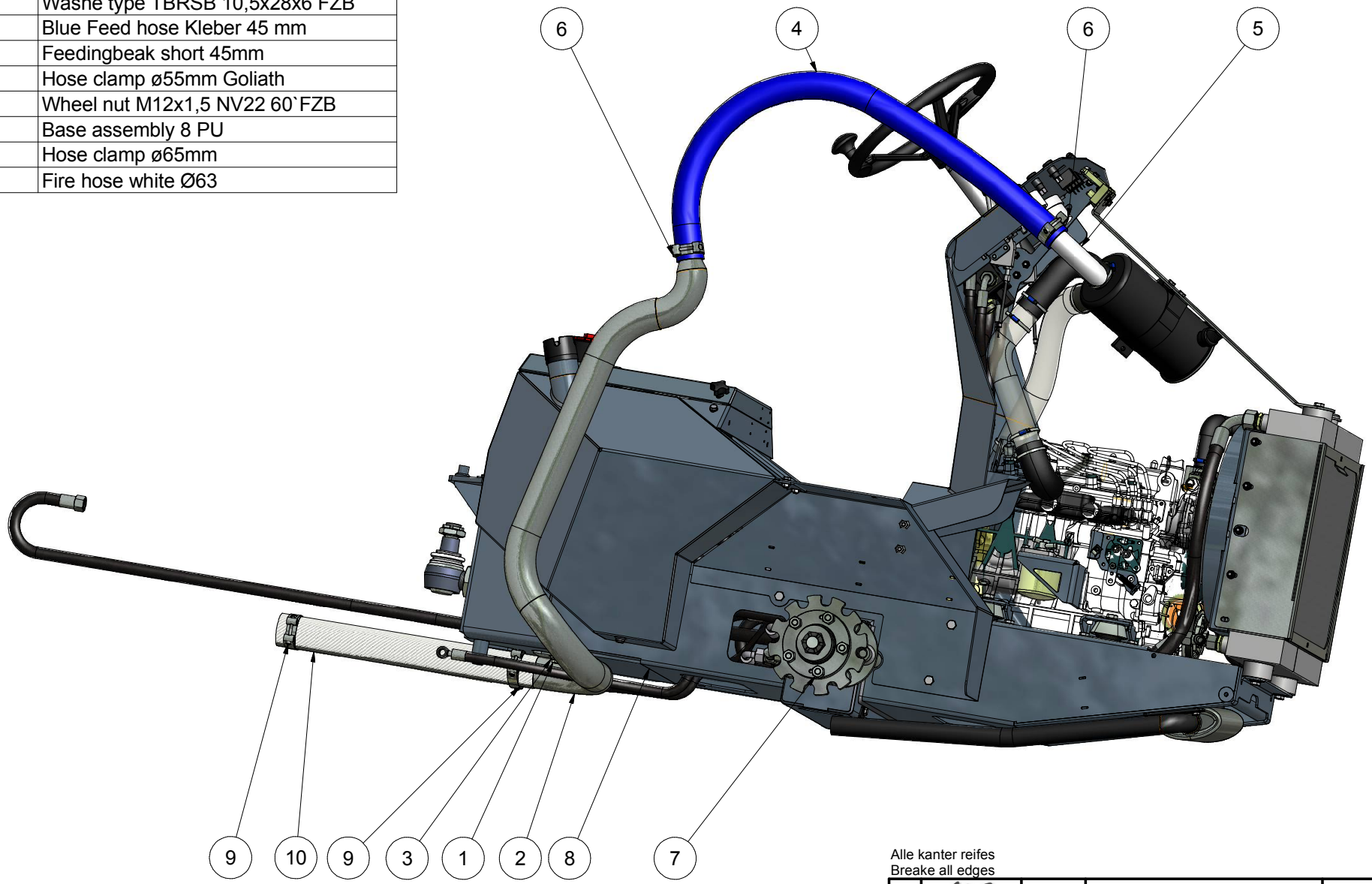

Alle kanter reifes
Breake all edges

REV	DESCRIPTION	DATE	APPROVED
A	Made	08-12-2011	KC

REVISION HISTORY

This document is strictly confidential and must on no terms be reproduced, copied or shared with third parties.
HEDENSTED GRUPPEN A/S

Hedensted Gruppen

Scale: 1 : 8	Ikke angivet tolerancer iht./ Not specificed tolerance according to: DS/ISO 2768-m	Sheet size: A3
	Overfl. beskaffenhed/Surface properties: No	Sheet: 1 /1
Part No.: M100077	Material:	
Description: Base assembly 9 PU		
Description:		

PARTS LIST			
ITEM	QTY	PART NUMBER	DESCRIPTION
1	4	11406016	Hexagon bolt M6x16 FZB
2	2	17906000	Self-locking nut M6 FZB
3	1	250112	Foot plate
4	1	250237	Wirering complete
5	1	489105	Foot pedal XPEA110
6	1	600460	Cable gland M16
7	1	600470	Nut M16 polyamid
8	6	82606000	Washer Ø6,4x18x1,6
9	1	M100077	Base assembly 9 PU

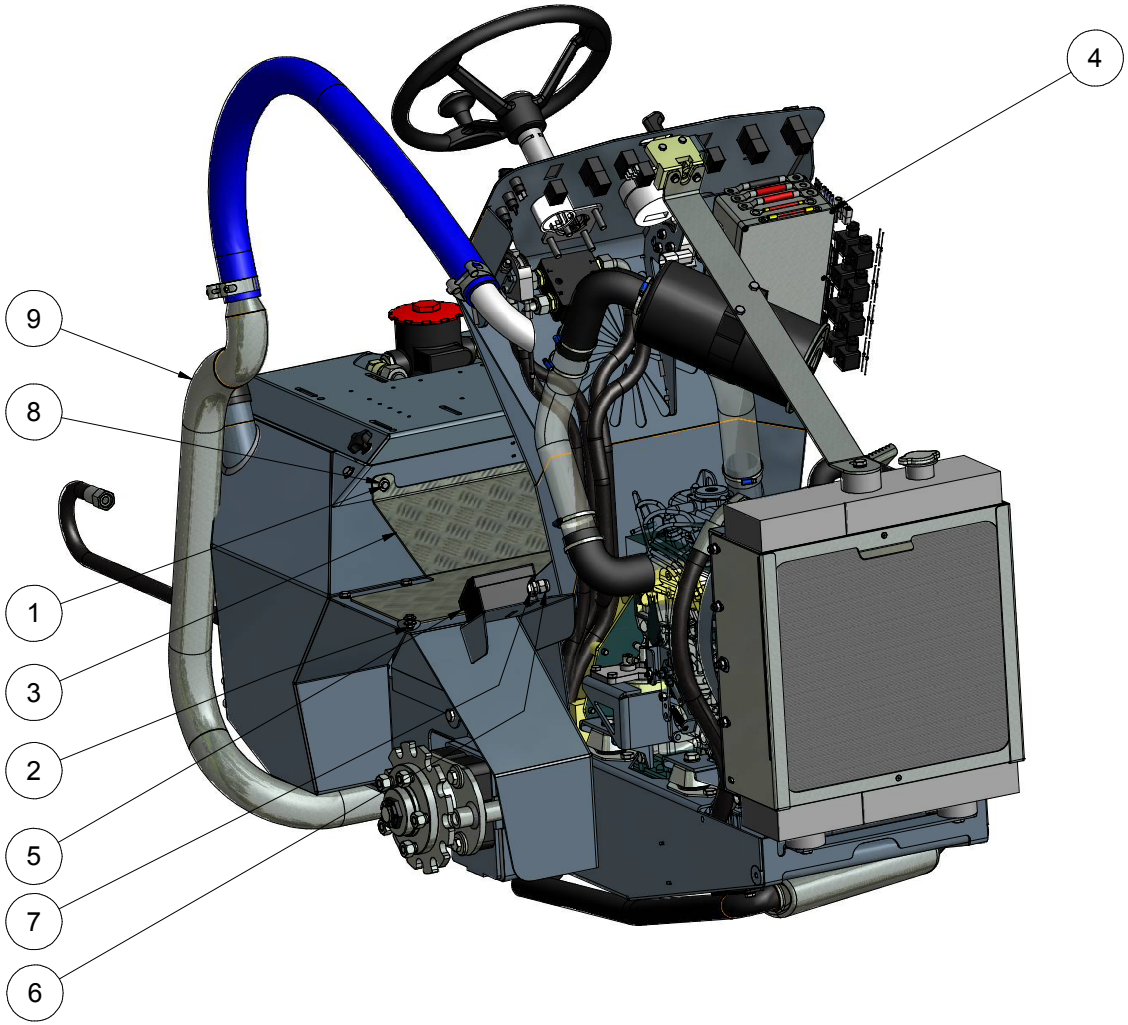

Alle kanter reifes
Breake all edges

REV	DESCRIPTION	DATE	APPROVED
A	Made	08-12-2011	KC
B	Part List updated	19-06-2013	KC

REVISION HISTORY

This document is strictly confidential and must on no account be reproduced or copied to third parties.
HEDENSTED GRUPPEN A/S

Hedensted Gruppen

Scale: 1 : 8	Ikke angivet tolerancer iht./ Not specificed tolerance according to: DS/ISO 2768-m	Sheet size: A3
	Overfl. beskaffenhed/Surface properties: No	Sheet: 1 /1
Part No.: M100079	Material:	
Description: Base assembly 10 PU		
Description:		

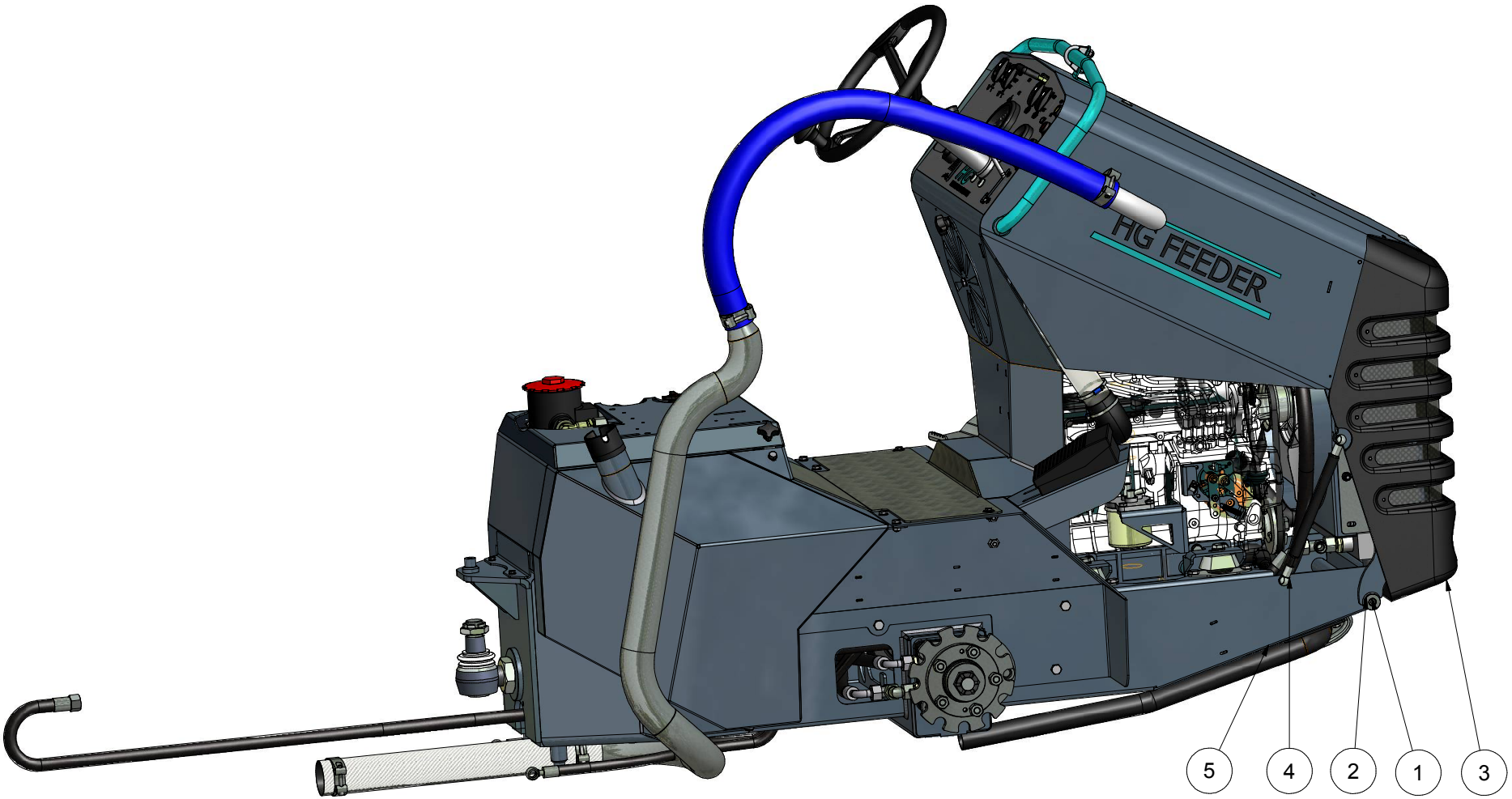

PARTS LIST			
ITEM	QTY	PART NUMBER	DESCRIPTION
1	2	10208045	Bolt unbraco cyl 8x45 FZB
2	2	250089	Bushing for hood
3	1	250170	Motor hood assembly
4	2	250174	Gas spring assembly
5	1	M100079	Base assembly 10 PU

REVISION HISTORY			
REV	DESCRIPTION	DATE	APPROVED
A	Made	26-05-2011	KC

Alle kanter reifes
Breake all edges

This document is strictly confidential and must on no ground be reproduced or shared with third parties.
HEDENSTED GRUPPEN A/S

Hedensted Gruppen

Scale: 1 : 8	Ikke angivet tolerancer iht./ Not specificed tolerance according to: DS/ISO 2768-m	Sheet size: A3
	Overfl. beskaffenhed/Surface properties: No	Sheet: 1 /1
Part No.: M100085	Material:	
Description: Base assembly 11 PU		
Description:		

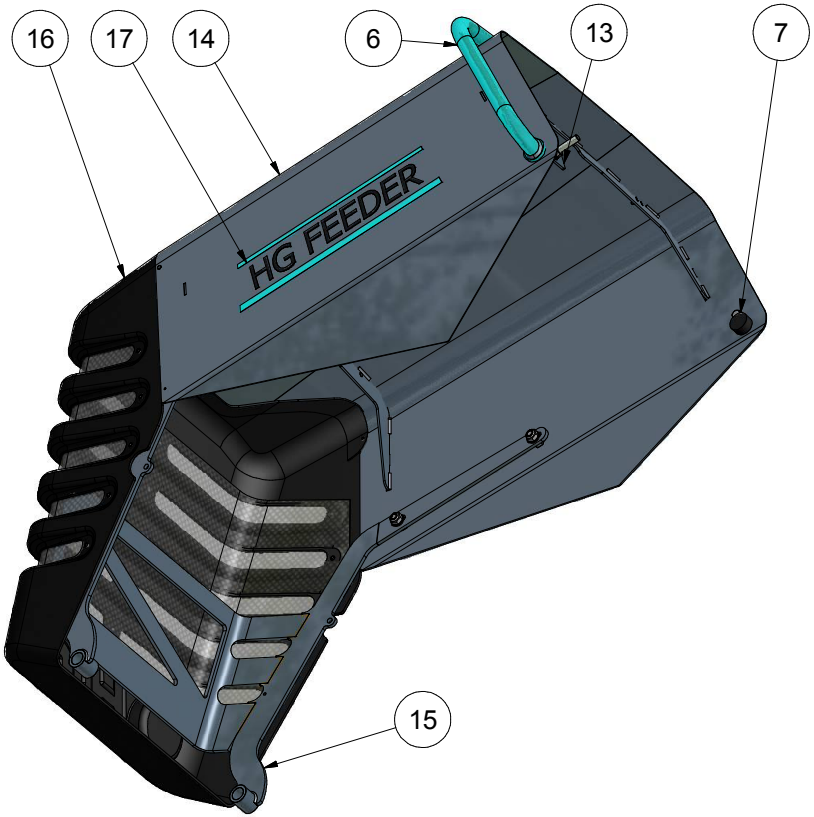

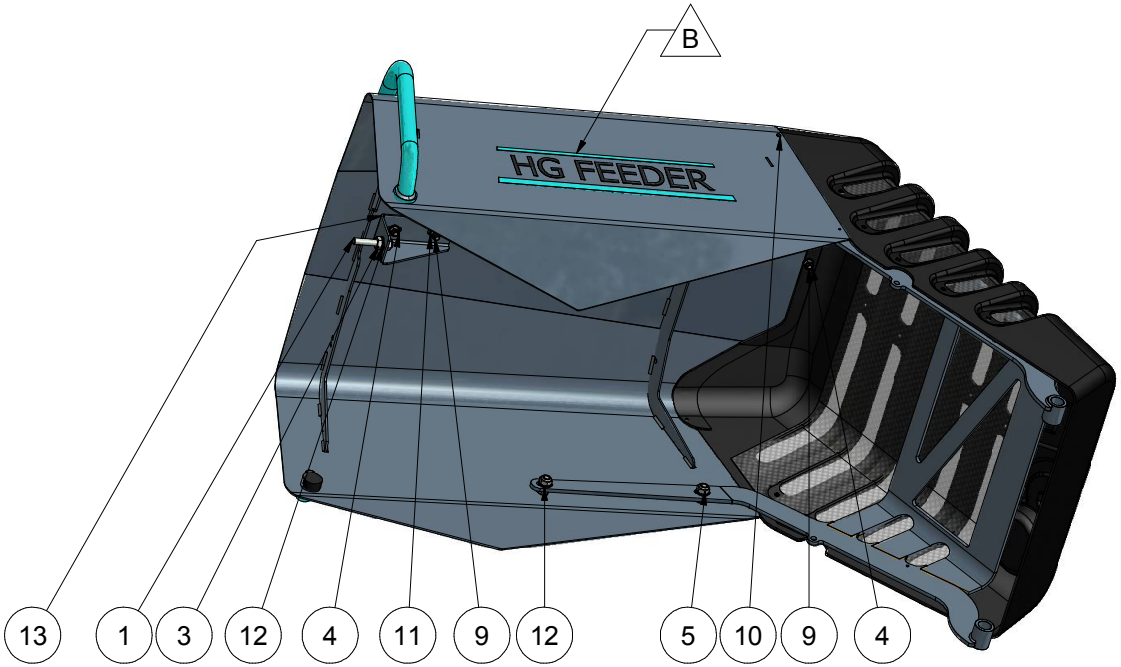

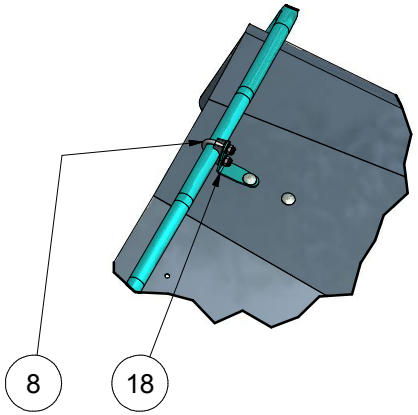

PARTS LIST			
ITEM	QTY	PART NUMBER	DESCRIPTION
1	1	11110080	Hexagon bolt M10x80 FZB
2	2	11408012	Hexagon bolt M8x12 FZB
3	2	1510000	Nut M10 FZB
4	5	17908000	Self-locking nut M8 FZB
5	4	17910000	Self-locking nut M10 FZB
6	1	250113	Handle for hood
7	2	423422	Vibration absorber 30x15xM8x20
8	1	423689	Clams 25mm.
9	3	64408020	Cup head square neck bolt M8x20 FZB
10	4	7003208	Pop rivet ø3.2x8mm
11	7	82108000	Washer M8 FZB
12	10	82110000	Washer M10 FZB
13	1	M100017	Brace for lock shaft
14	1	M100029	Ingine cover
15	1	M100080	Frame for hood
16	1	M100081	Front grill assenbly 1
17	2	M100083	Feeder logo
18	1	M100220	Stiffering for handle

REVISION HISTORY			
REV	DESCRIPTION	DATE	APPROVED
A	Made	12-12-2011	KC
B	Logo on right side changed stiffering added	28-08-2012	KC
C	Part List updated	19-06-2013	KC
D	Part List updated	02-06-2014	KC

Alle kanter reifes
Breake all edges

This document is strictly confidential and must on no ocasion be copied or shared with other parties.
HEDENSTED GRUPPEN A/S

Hedensted Gruppen

Scale: 1 : 8	Ikke angivet tolerancer iht./ Not specificed tolerance according to: DS/ISO 2768-m	Sheet size: A3
	Overfl. beskaffenhed/Surface properties: No	Sheet: 1 /1
Part No.: 250170	Material:	
Description: Motor hood assembly		
Description:		

PARTS LIST			
ITEM	QTY	PART NUMBER	DESCRIPTION
1	1	250173	Gas spring 75Nm stroke 150
2	2	250078	Ball angle joint M8

Alle kanter reifes
Breake all edges

REV	DESCRIPTION	DATE	APPROVED
A	Made	09-12-2011	KC

REVISION HISTORY

This document is strictly confidential and must on no a count be copied or disclosed to any third person.
HEDENSTED GRUPPEN A/S

Hedensted Gruppen

Scale: 1 : 2	Ikke angivet tolerancer iht./ Not specificed tolerance according to: DS/ISO 2768-m	Sheet size: A4
	Overfl. beskaffenhed/Surface properties: No	Sheet: 1 /1
Part No.: 250174	Material:	
Description: Gas spring assembly		
Description:		

PARTS LIST			
ITEM	QTY	PART NUMBER	DESCRIPTION
1	3,000 m	250192	Outer cable Ø1,9 Ø6
2	4,000 m	250193	Inner cable Ø1,9mm
3	4	250194	Cab for cable
4	1	423689	Clams 25mm.
5	1	475507	Work lamp With switch
6	1	475525	Light bulb H3 12V 55W
7	1	M100085	Base assembly 11 PU
8	1	M100087	Light brace

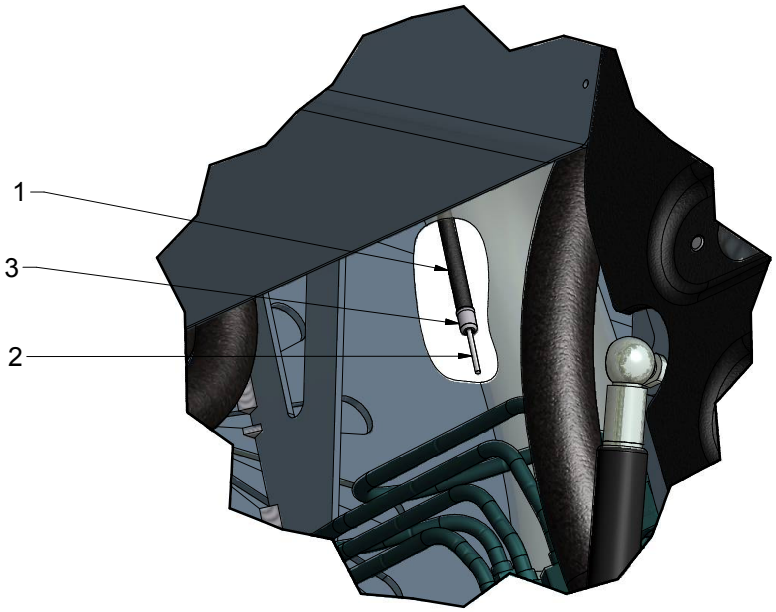

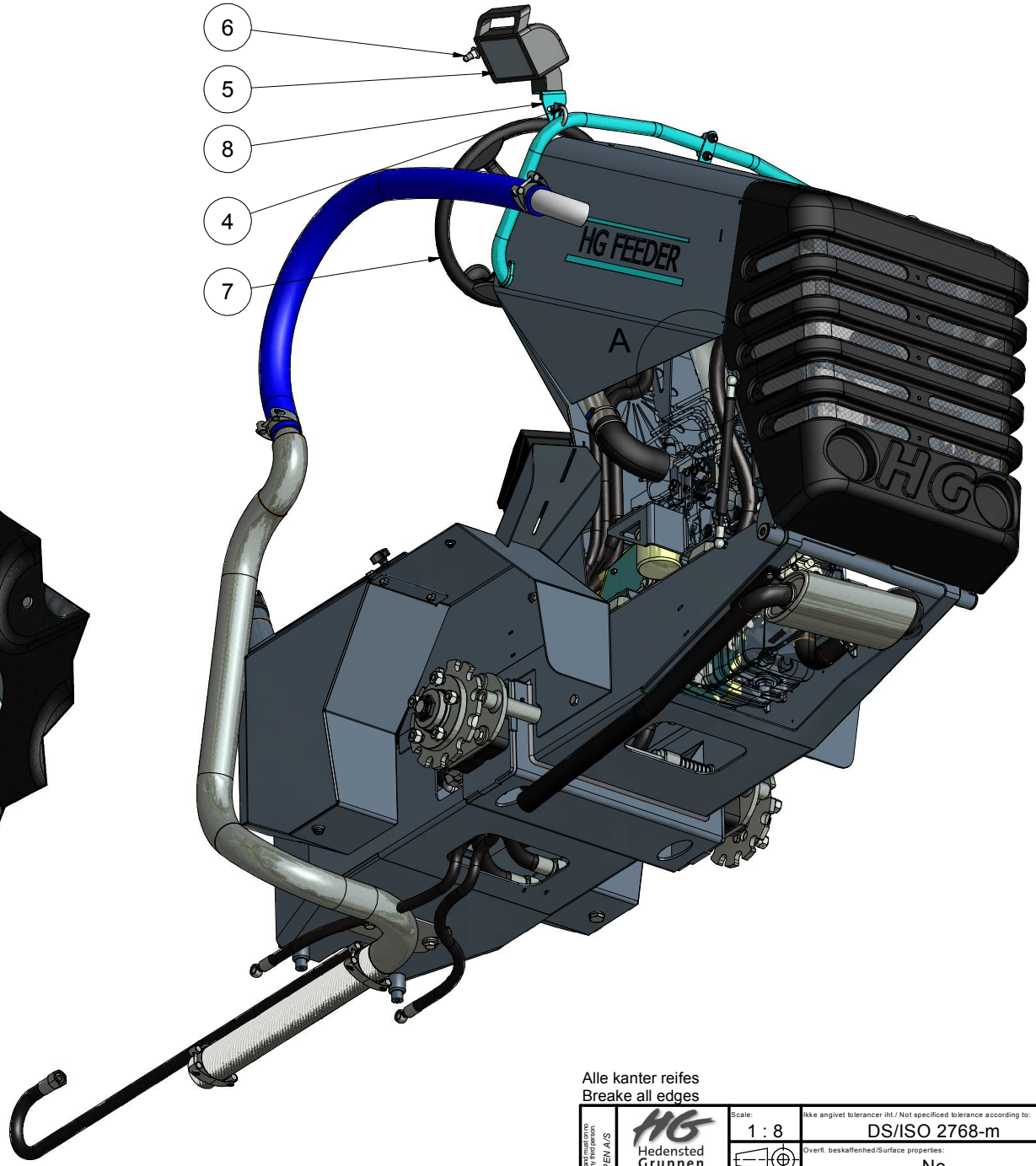

Alle kanter reifes
Breake all edges

REV	DESCRIPTION	DATE	APPROVED
A	Made	12-12-2011	KC
B	Part List updated	19-06-2013	KC

REVISION HISTORY

This document is strictly confidential and must on no terms be reproduced or copied to third parties.
HEDENSTED GRUPPEN A/S

Hedensted Gruppen

Scale: 1 : 8	Ikke angivet tolerancer iht./ Not specificed tolerance according to: DS/ISO 2768-m	Sheet size: A3
	Overfl. beskaffenhed/Surface properties: No	Sheet: 1 /1
Part No.: 250076	Material:	
Description: Pulling unit		
Description:		

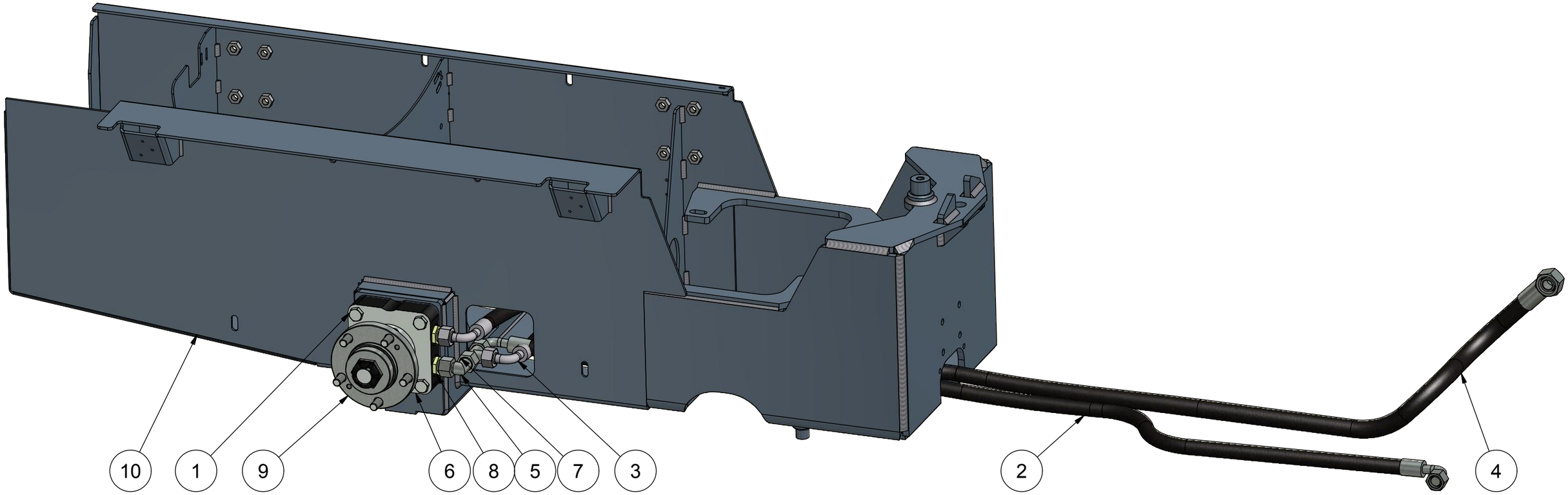

PARTS LIST			
ITEM	QTY	PART NUMBER	DESCRIPTION
1	8	11412055	Hexagon bolt 12 x 55 FZB
2	1	250225	Hydraulic hose no 14
3	2	250226	Hydraulic hose no 15
4	1	250230	Hydraulic hose no 19
5	2	424048	Adjustible elbow 15L DM
6	2	430105	Delta 252ccm wheelmotor
7	2	477072	Adjustible tee SL15 L
8	4	477120	Male stud Ø15-L 1/2" DM
9	2	M100041	Wheel hub assembly slim
10	1	M100111	900 Rear frame

REVISION HISTORY			
REV	DESCRIPTION	DATE	APPROVED
A	Made	20-12-2011	KC
B	Part list updated	25-04-2013	KC

Alle kanter reifes
Breake all edges

This document is strictly confidential and must on no account be copied or disclosed to any third person.
HEDENSTED GRUPPEN A/S

Hedensted Gruppen

Scale: 1 : 6	Ikke angivet tolerancer iht./ Not specificed tolerance according to: DS/ISO 2768-m		Sheet size: A3
	Overfl. beskaffenhed/Surface properties: No		Sheet: 1 /2
Part No.: M100112	Material:		
Description: 900 Rear assembly 1			
Description:			

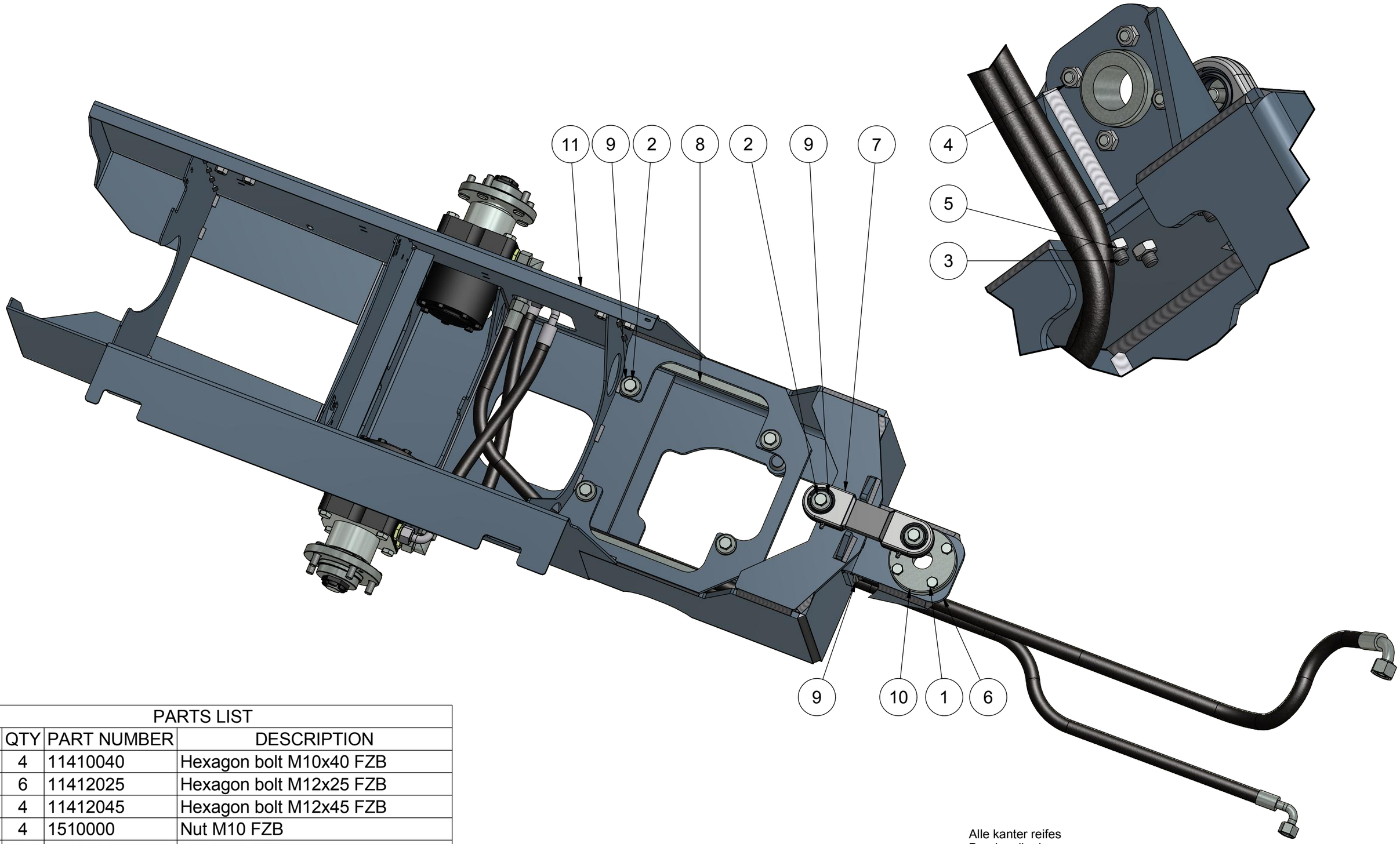

PARTS LIST			
ITEM	QTY	PART NUMBER	DESCRIPTION
1	4	11410040	Hexagon bolt M10x40 FZB
2	6	11412025	Hexagon bolt M12x25 FZB
3	4	11412045	Hexagon bolt M12x45 FZB
4	4	1510000	Nut M10 FZB
5	4	1512000	Nut M12 FZB
6	1	250084	Brace for steering
7	1	250135	Sterring link
8	2	250141	Tension plate
9	10	4212000	Washe type TBRSB 13x36x6 FZB
10	1	425425	Bushing for ball joint
11	1	M100112	900 Rear assembly 1

REVISION HISTORY			
REV	DESCRIPTION	DATE	APPROVED
A	Made	20-12-2011	KC
B	Part List updated	26-06-2013	KC

Alle kanter reifes
Breake all edges

This document is strictly confidential and must on no account be copied or disclosed to any third person.
HEDENSTED GRUPPEN A/S

Hedensted Gruppen

Scale: 1 : 6	Ikke angivet tolerancer iht./ Not specificed tolerance according to: DS/ISO 2768-m		Sheet size: A3
	Overfl. beskaffenhed/Surface properties: No		Sheet: 1 /2
Part No.: M100113	Material:		
Description: 900 Rear assembly 2			
Description:			

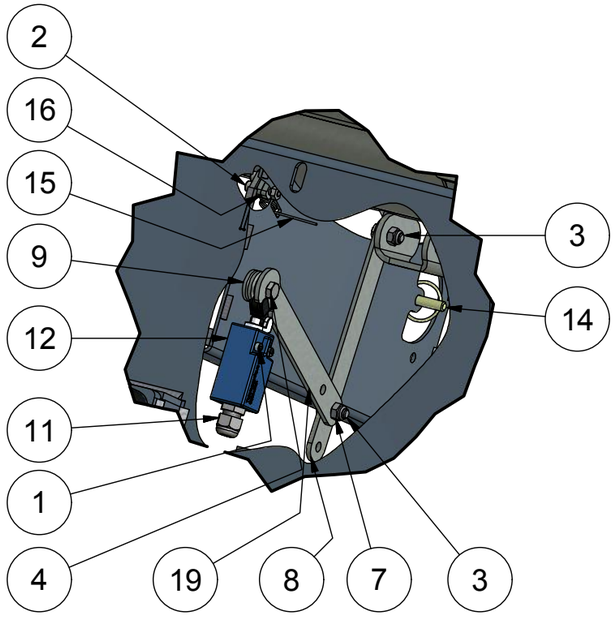

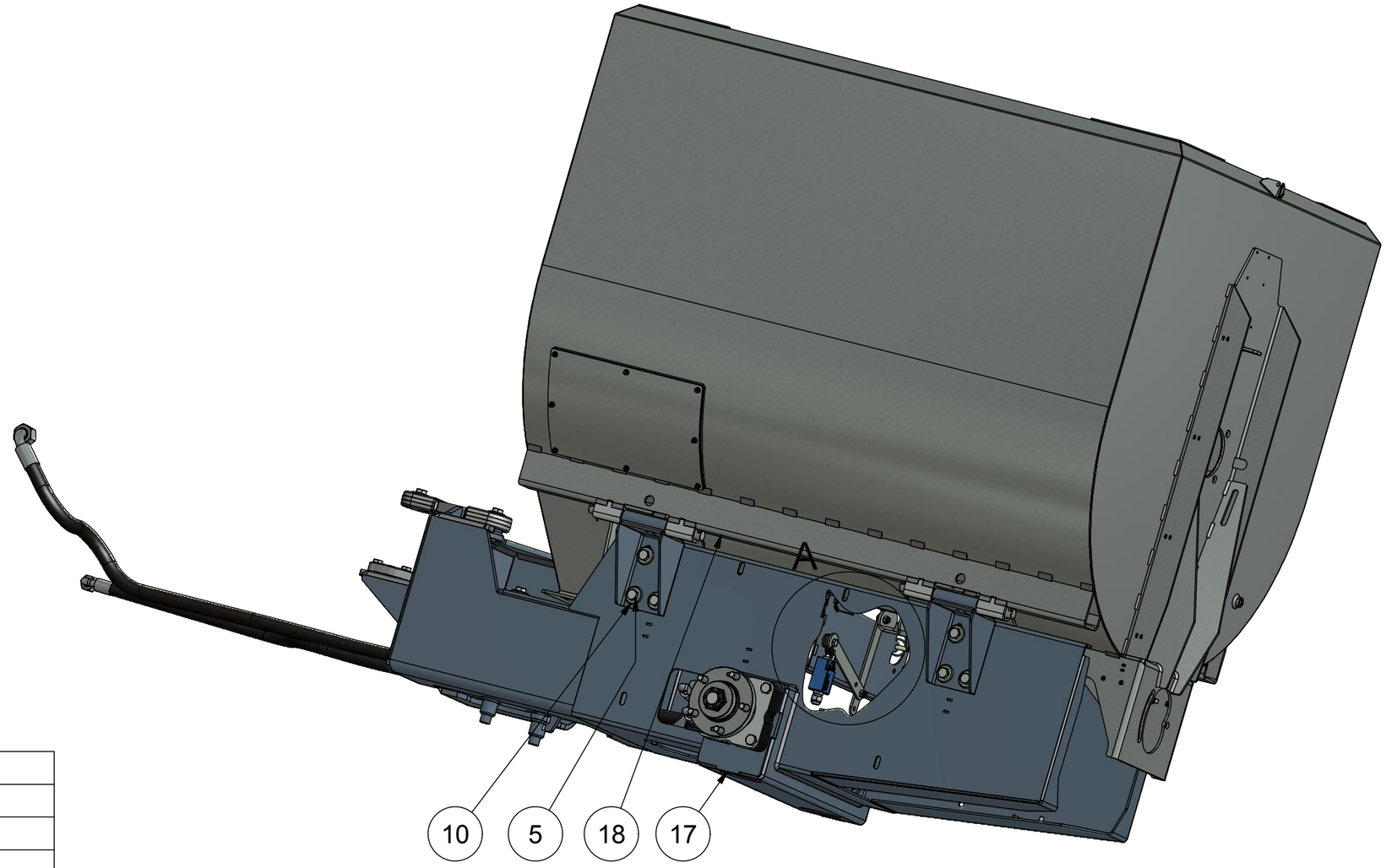

PARTS LIST			
ITEM	QTY	PART NUMBER	DESCRIPTION
1	2	10204035	Bolt unbraco cyl 4x35 FZB
2	2	10205025	Bolt unbrako cyl 5x25 FZB
3	2	11408020	Hexagon bolt M8x20 FZB
4	1	11408035	Hexagon bolt M8x35 FZB
5	8	11412025	Hexagon bolt M12x25 FZB
6	2	17904000	Self-locking nut M4 FZB
7	3	17908000	Self-locking nut M8 FZB
8	1	250124	Lock brace
9	2	4208000	Washe type TBRSB 8,4x26x5 FZB
10	8	4212000	Washe type TBRSB 13x36x6 FZB
11	1	600460	Cable gland M16
12	1	600972	Limith switch
13	2	82104000	Washer M4 FZB
14	1	M100093	Tractor pin Ø8
15	1	M100100	Torsion spring double
16	3	M100101	Plate for spring
17	1	M100113	900 Rear assembly 2
18	1	M100114	Container 900 assembly 1
19	1	M100168	Lock brace part 2

REVISION HISTORY			
REV	DESCRIPTION	DATE	APPROVED
A	Made	16-12-2011	KC
B	Placement of switch changed	24-05-2012	KC

Alle kanter reifes
Breake all edges

This document is strictly confidential and must on no account be copied or disclosed to any third person.
HEDENSTED GRUPPEN A/S

Hedensted Gruppen

Scale: 1 : 10	Ikke angivet tolerancer iht./ Not specificed tolerance according to: DS/ISO 2768-m		Sheet size: A3
	Overfl. beskaffenhed/Surface properties: No		Sheet: 1 /2
Part No.: M100115	Material:		
Description: 900 Rear assembly 3			
Description:			

PARTS LIST			
ITEM	QTY	PART NUMBER	DESCRIPTION
1	8	19905000	Self-locking nut M5 Inox A2
2	2	216739	Plug male 1/4"
3	2	250114	Hinge for container
4	2	250140	Shaft for hinge
5	8	81805000	Washer M5 Inox A2
6	4	89404036	Cotter pin Ø4x36 FZB
7	1	M100027	Hatch for feed container
8	1	M100110	Container for feeder 900
9	1	M10135	Gasket for hatch

REVISION HISTORY			
A	Made	20-12-2011	KC
B	Partlist updated	22-04-2014	KC
REV	DESCRIPTION	DATE	APPROVED

Alle kanter reifes
Breake all edges

This document is strictly confidential and must on no ground be reproduced or shared with third parties.
HEDENSTED GRUPPEN A/S

Hedensted Gruppen

Scale: 1 : 8	Ikke angivet tolerancer iht./ Not specificed tolerance according to: DS/ISO 2768-m	Sheet size: A3
	Overfl. beskaffenhed/Surface properties: No	Sheet: 1 /1
Part No.: M100114	Material:	
Description: Container 900 assembly 1		
Description:		

PARTS LIST			
ITEM	QTY	PART NUMBER	DESCRIPTION
1	1	11412035	Hexagon bolt M12x35 FZB
2	10	12908025	Hexagon bolt m8 x 25 - A2
3	4	12912035	Hexagon bolt M12x35 A2
4	11	17908000	Self-locking nut M8 FZB
5	1	197044	Key 10x8x30
6	1	250088	Bushing for worm
7	1	250172	Hub assembly 2 for worm
8	1	426384	Grease fitting M10x1 straight
9	1	M100036	Sprocket Z-32 1inch Ø35
10	1	M100044	Hub complete for mixer
11	1	M100095	Thread pipe
12	1	M100096	Washer for sprocket
13	1	M100115	900 Rear assembly 3
14	1	M100117	Mixer for 900

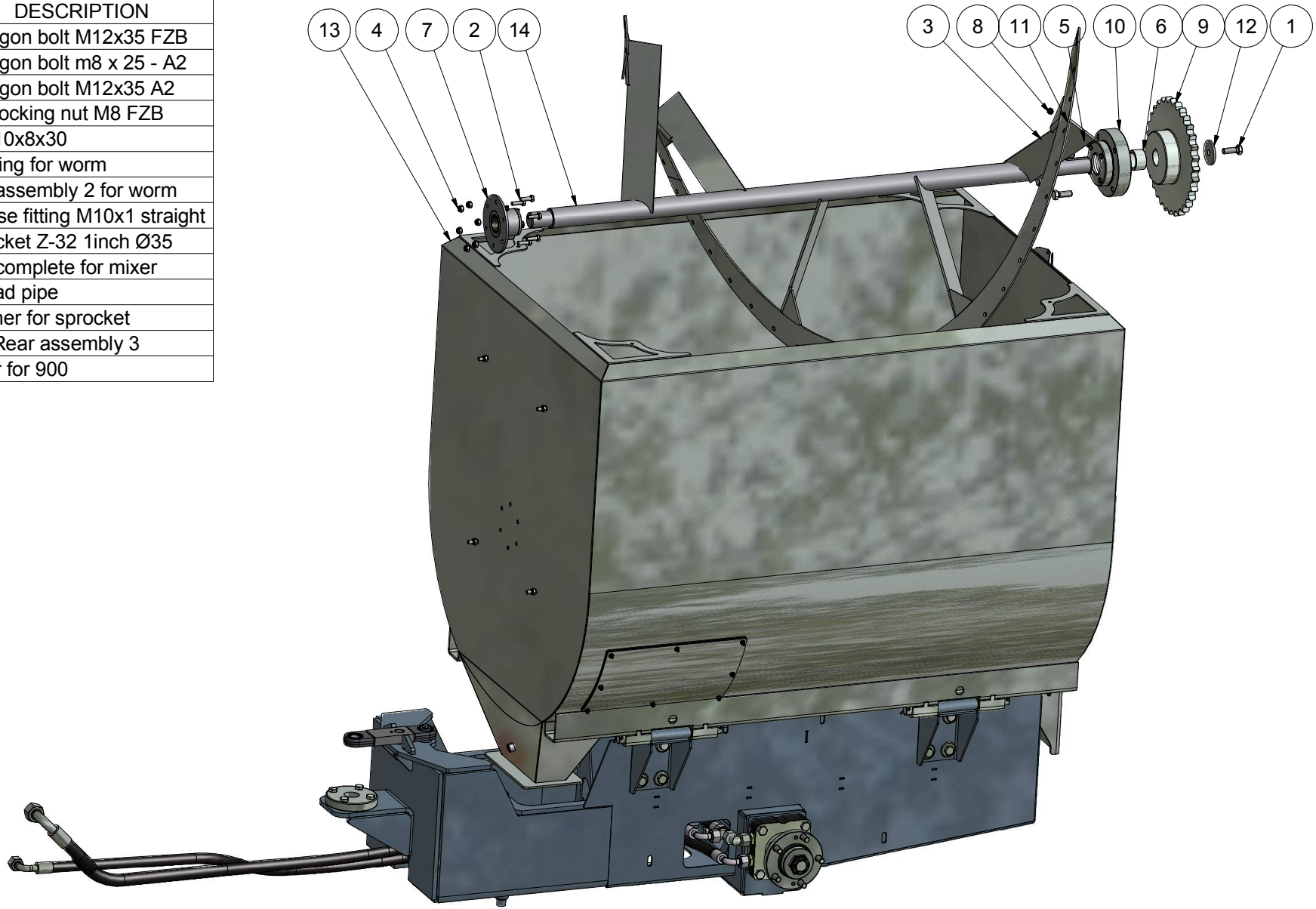

Alle kanter reifes
Breake all edges

REV	DESCRIPTION	DATE	APPROVED
A	Made	20-12-2011	KC

REVISION HISTORY

This document is strictly confidential and must on no account be reproduced or made available to third parties.
HEDENSTED GRUPPEN A/S

Hedensted Gruppen

Scale: 1 : 9	Ikke angivet tolerancer iht./ Not specificed tolerance according to: DS/ISO 2768-m	Sheet size: A3
	Overfl. beskaffenhed/Surface properties: No	Sheet: 1 /1
Part No.: M100116	Material:	
Description: 900 Rear assembly 4		
Description:		

PARTS LIST			
ITEM	QTY	PART NUMBER	DESCRIPTION
1	1	250117	Hub for mixer worm
2	1	250134	Spherical roller bearings 30-72-23
3	1	250146	Wiper 55x45x7

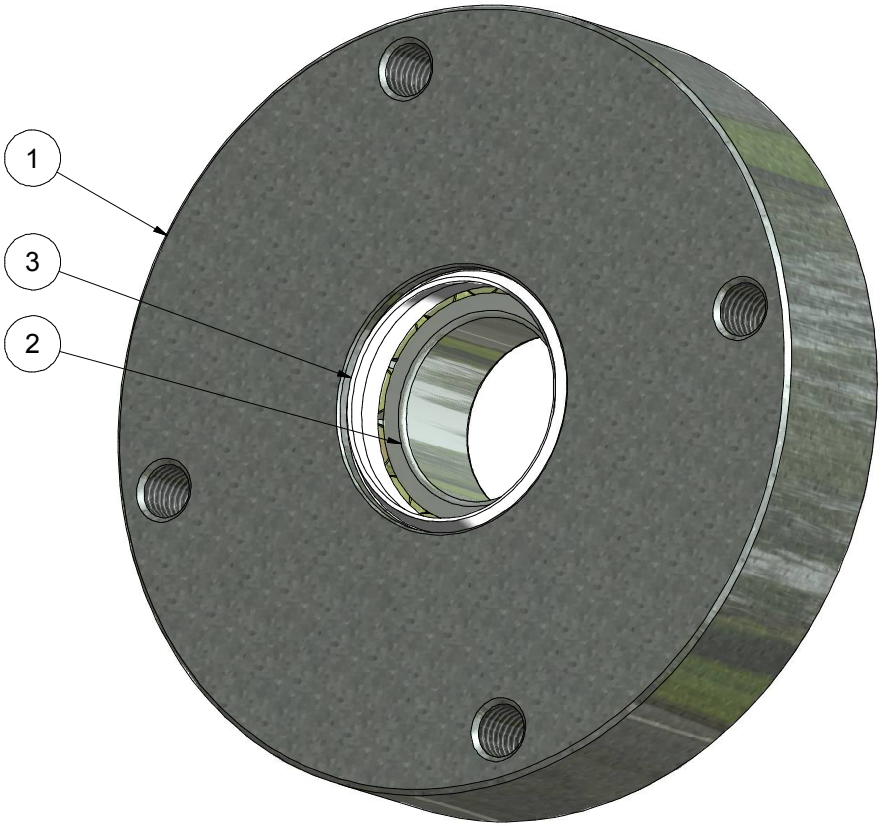

Alle kanter reifes
Breake all edges

REV	DESCRIPTION	DATE	APPROVED
A	Made	12-12-2011	KC

REVISION HISTORY

This document is strictly confidential and must not be used or reproduced without the prior consent of HEDENSTED GRUPPEN A/S

Hedensted Gruppen

Scale: 1 : 1	Ikke angivet tolerancer iht./ Not specificed tolerance according to: DS/ISO 2768-m	Sheet size: A3
	Overfl. beskaffenhed/Surface properties: No	Sheet: 1 /1
Part No.: 250115	Material:	
Description: Hub assembly 1 for worm		
Description:		

PARTS LIST			
ITEM	QTY	PART NUMBER	DESCRIPTION
1	1	250118	Hub for sealings
2	1	250129	O-ring 92x2,5
3	2	250146	Wiper 55x45x7

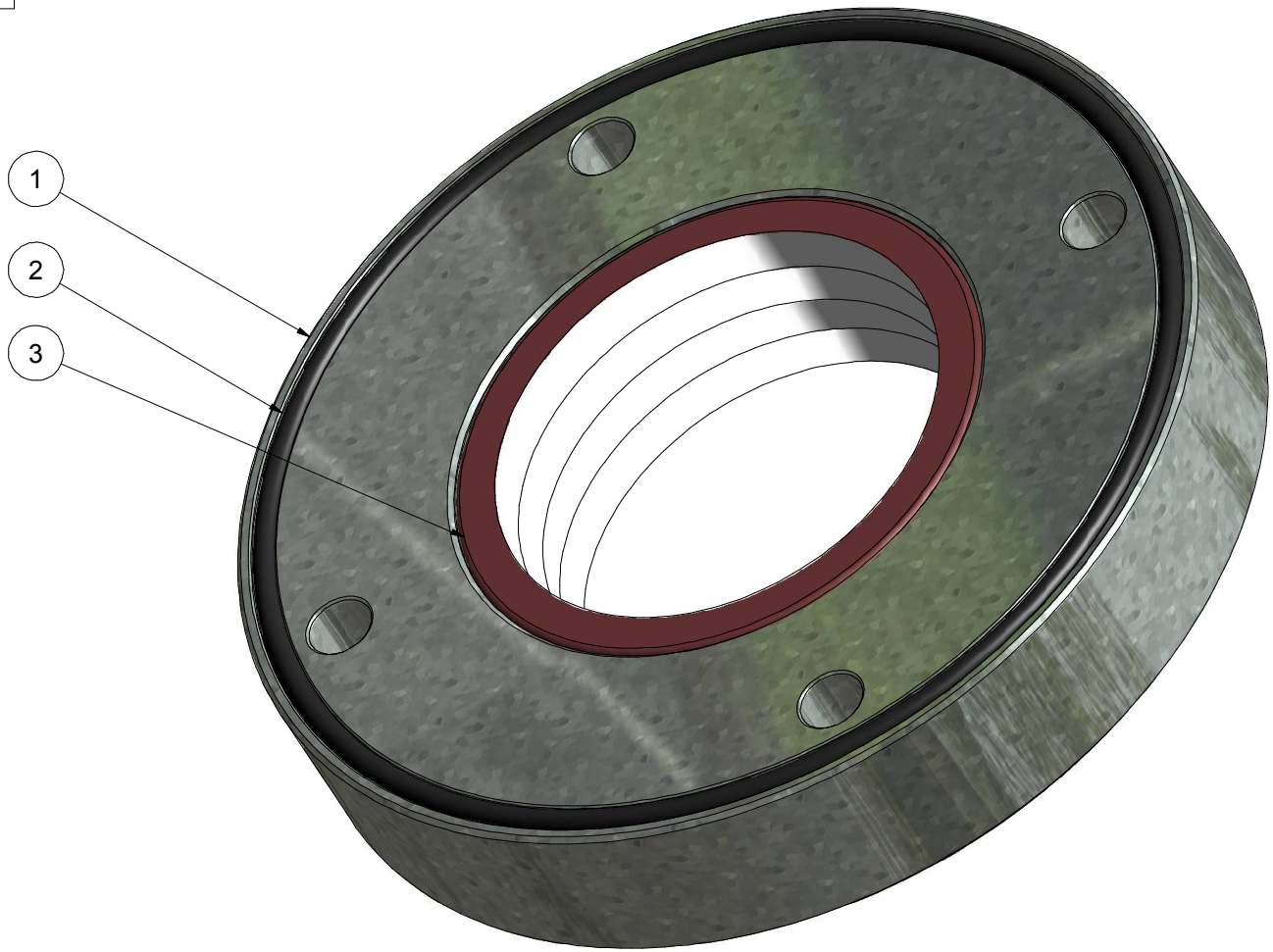

Alle kanter reifes
Breake all edges

REV	DESCRIPTION	DATE	APPROVED
A	Made	12-12-2011	KC

REVISION HISTORY

This document is strictly confidential and must on no account be reproduced or made available to third parties.
HEDENSTED GRUPPEN A/S

Hedensted Gruppen

Scale: 2 : 1	Ikke angivet tolerancer iht./ Not specificed tolerance according to: DS/ISO 2768-m	Sheet size: A3
	Overfl. beskaffenhed/Surface properties: No	Sheet: 1 /1
Part No.: 250116	Material:	
Description: Hub assembly with sealings		
Description:		

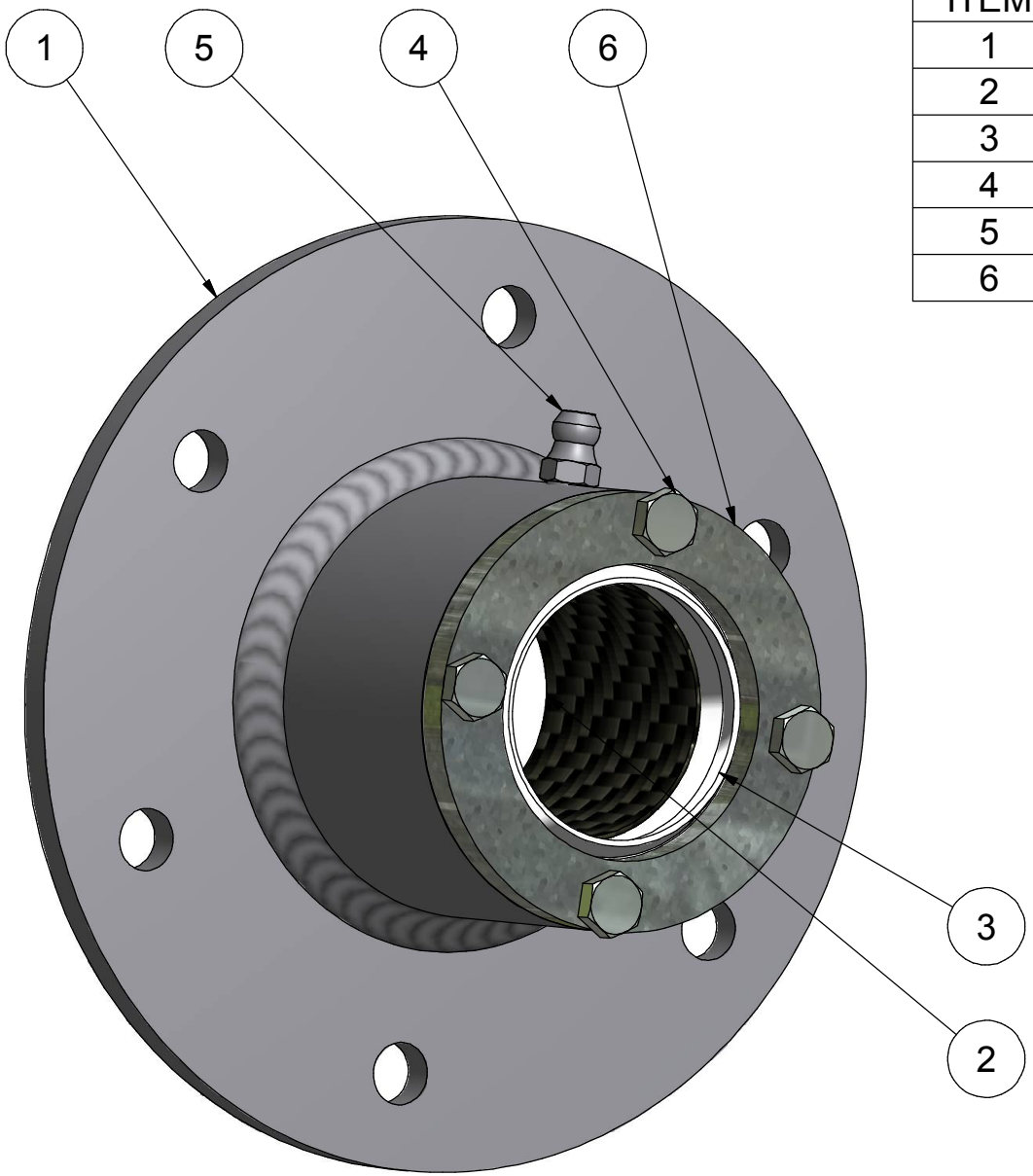

PARTS LIST			
ITEM	QTY	PART NUMBER	DESCRIPTION
1	1	250119	Hub for slide bearing
2	1	250110	FW Bushing 35-41-40
3	1	250145	Wiper 45x35x7
4	4	12905012	Hexagon bolt m5x12 Inox
5	1	423068	Grease fitting M6 straight
6	1	250142	Tesion plate for bearing housing

Alle kanter reifes
Breake all edges

REV	DESCRIPTION	DATE	APPROVED
A	Made	09-12-2011	KC

REVISION HISTORY

This document is strictly confidential and must on no account be copied or disclosed to any third person.
HEDENSTED GRUPPEN A/S

Hedensted Gruppen

Scale: 1 : 1	Ikke angivet tolerancer iht./ Not specificed tolerance according to: DS/ISO 2768-m	Sheet size: A4
	Overfl. beskaffenhed/Surface properties: No	Sheet: 1 /1
Part No.: 250172	Material:	
Description: Hub assembly 2 for worm		
Description:		

PARTS LIST			
ITEM	QTY	PART NUMBER	DESCRIPTION
1	4	10205035	Bolt Unbraco cyl 5x35 FZB
2	6	12606000	Nut M6 A2
3	6	12906030	Hexagon bolt m6x30 A2
4	1	425934	Wire emergency stop switch
5	6	430465	Wheel for wire emergency stop
6	1	600455	Cabel gland M20 Ø5-12
7	6	82106000	Washer M6 FZB
8	6	M100038	Bushing for wire
9	3,5 m	M100039	Inox wire 7x7 Ø3
10	1	M100116	900 Rear assembly 4

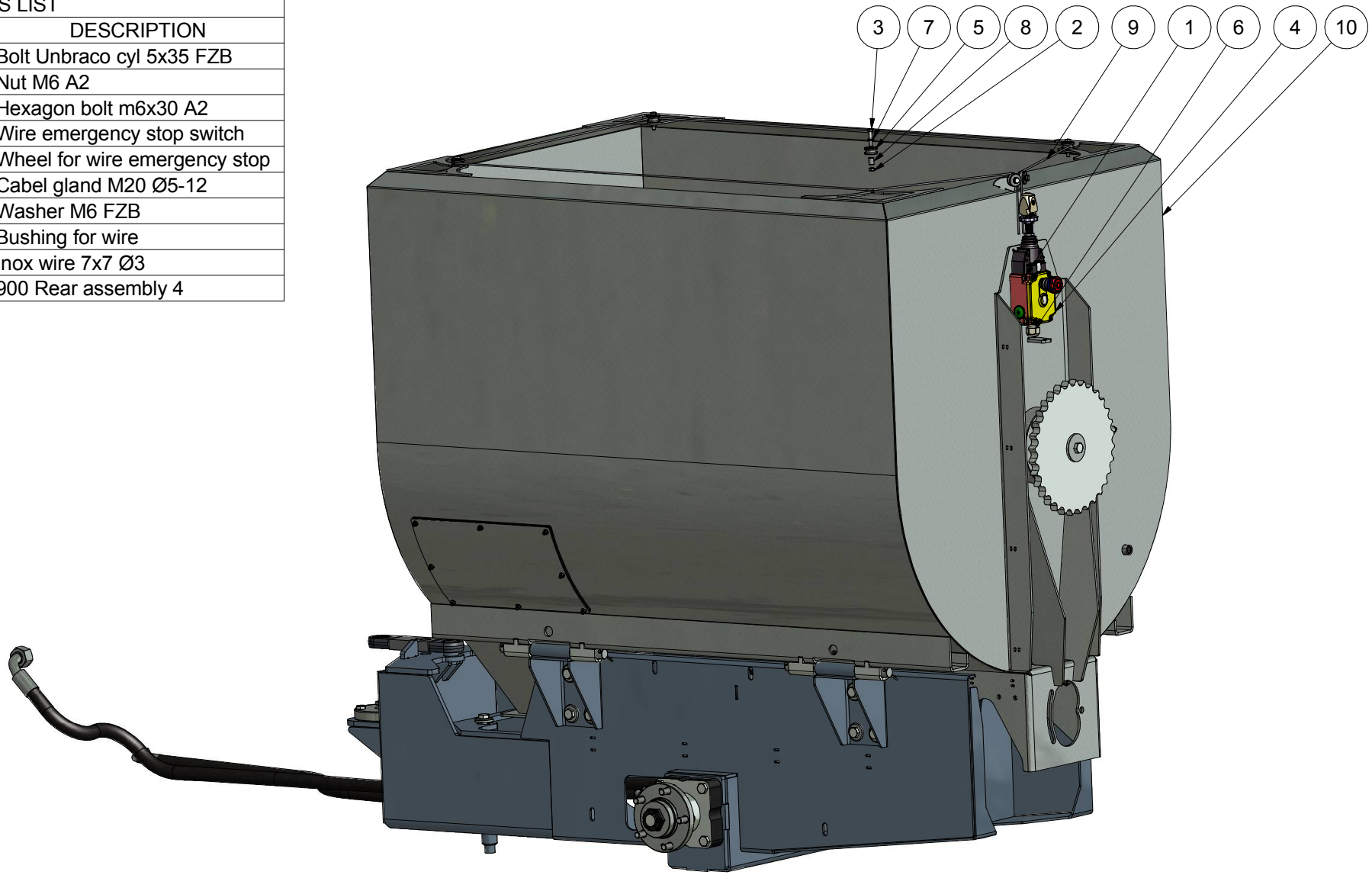

Alle kanter reifes
Breake all edges

REV	DESCRIPTION	DATE	APPROVED
A	Made	21-12-2011	KC
B	Emergency stop is changed	07-02-2012	KC
C	Part List updated	27-06-2013	KC

REVISION HISTORY

This document is strictly confidential and must on no terms be reproduced, copied or shared with others.
HEDENSTED GRUPPEN A/S

Hedensted Gruppen

Scale: 1 : 8	Ikke angivet tolerancer iht./ Not specificed tolerance according to: DS/ISO 2768-m	Sheet size: A3
	Overfl. beskaffenhed/Surface properties: No	Sheet: 1 /1
Part No.: M100118	Material:	
Description: 900 Rear assembly 5		
Description:		

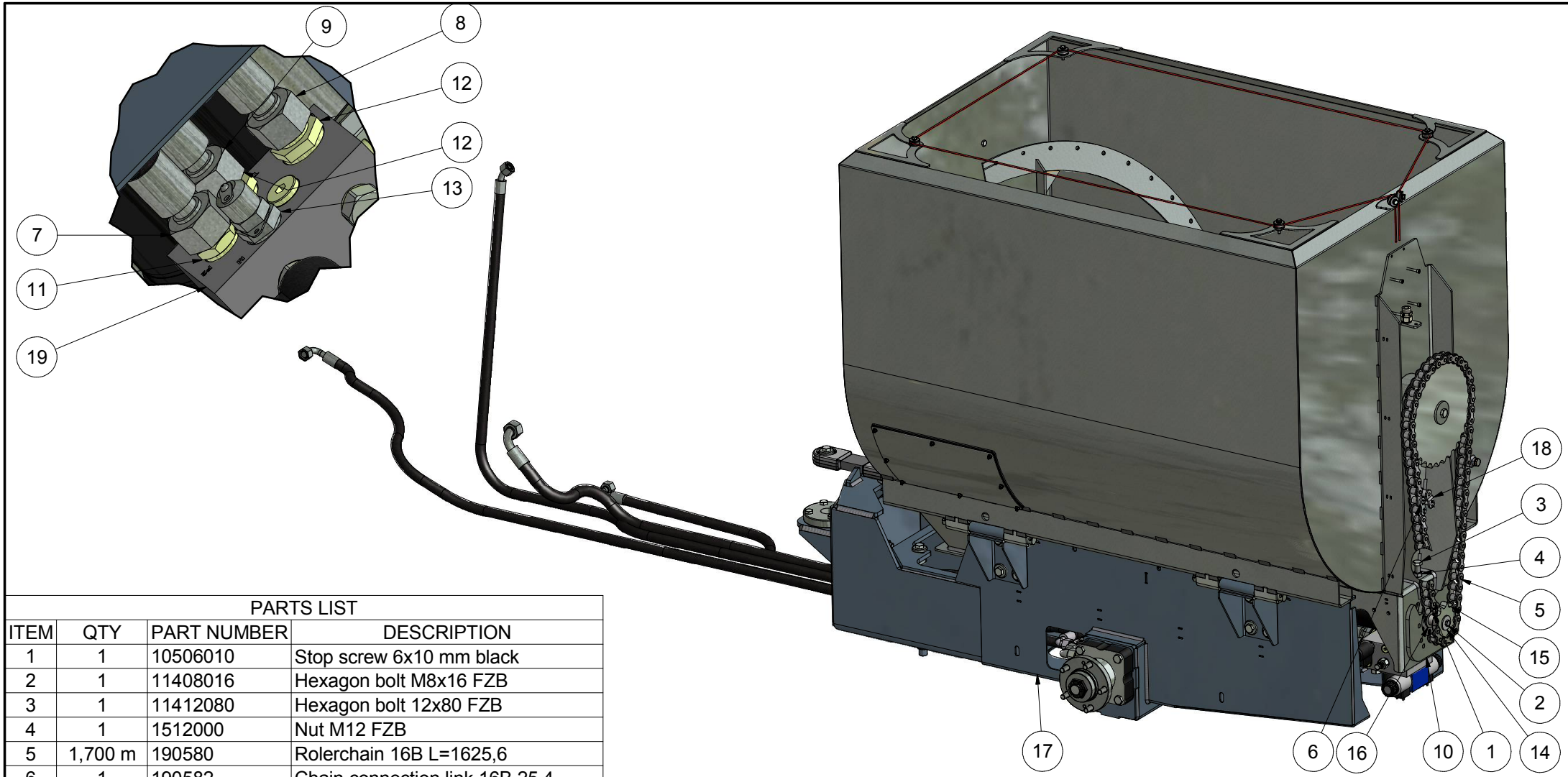

PARTS LIST			
ITEM	QTY	PART NUMBER	DESCRIPTION
1	1	10506010	Stop screw 6x10 mm black
2	1	11408016	Hexagon bolt M8x16 FZB
3	1	11412080	Hexagon bolt 12x80 FZB
4	1	1512000	Nut M12 FZB
5	1,700 m	190580	Rolerchain 16B L=1625,6
6	1	190582	Chain connection link 16B 25,4
7	1	250234	Hydraulic hose no 23
8	1	250235	Hydraulic hose no 24
9	1	250236	Hydraulic hose no 25
10	1	25416	Container sheet 11
11	1	477117	Male stud 15L 3/8"
12	2	477120	Male stud Ø15-L 1/2" DM
13	1	477229	Male test nipple 3/8" BSP
14	1	4809335	Washer type SRKB ø9x35x3
15	1	M100037	Sprocket Z-11 1inch Ø25
16	1	M100099	Spacer for sprocket
17	1	M100118	900 Rear assembly 5
18	1	M100412	Half chain link 16B
19	1	M100519	Motor assembly for mixer

REVISION HISTORY			
REV	DESCRIPTION	DATE	APPROVED
A	Made	21-12-2011	KC
B	Part List updated	27-06-2013	KC
C	Part List updated	26-05-2015	KC

Alle kanter reifes
Breake all edges

This document is strictly confidential and must on no time be shared with third parties without written consent.
HEDENSTED GRUPPEN A/S

Hedensted Gruppen

Scale: 1 : 9	Ikke angivet tolerancer iht./ Not specificed tolerance according to: DS/ISO 2768-m	Sheet size: A3
	Overfl. beskaffenhed/Surface properties: No	Sheet: 1 /2
Part No.: M100119	Material:	
Description: 900 Rear assembly 6		
Description:		

PARTS LIST			
ITEM	QTY	PART NUMBER	DESCRIPTION
1	4	10205045	Bolt Unbraco cyl 5x45 FZB
2	3	10208075	Bolt Unbrako cyl 8x75 FZB
3	1	250160	Valve contra 80 LPM T-13A
4	1	250162	Valve hydraulic solenoid 4-2
5	1	250163	Valve overload
6	1	250164	Valve solenoid 40 LPM T-11A
7	1	250165	Valve T-13A
8	2	250166	Solenoid 12 vDC
9	2	473813	O-ring ø21x2,5 NBR 70
10	1	M100517	Hydraulic orbit motor 400ccm
11	1	M100520	Valve block for mixer

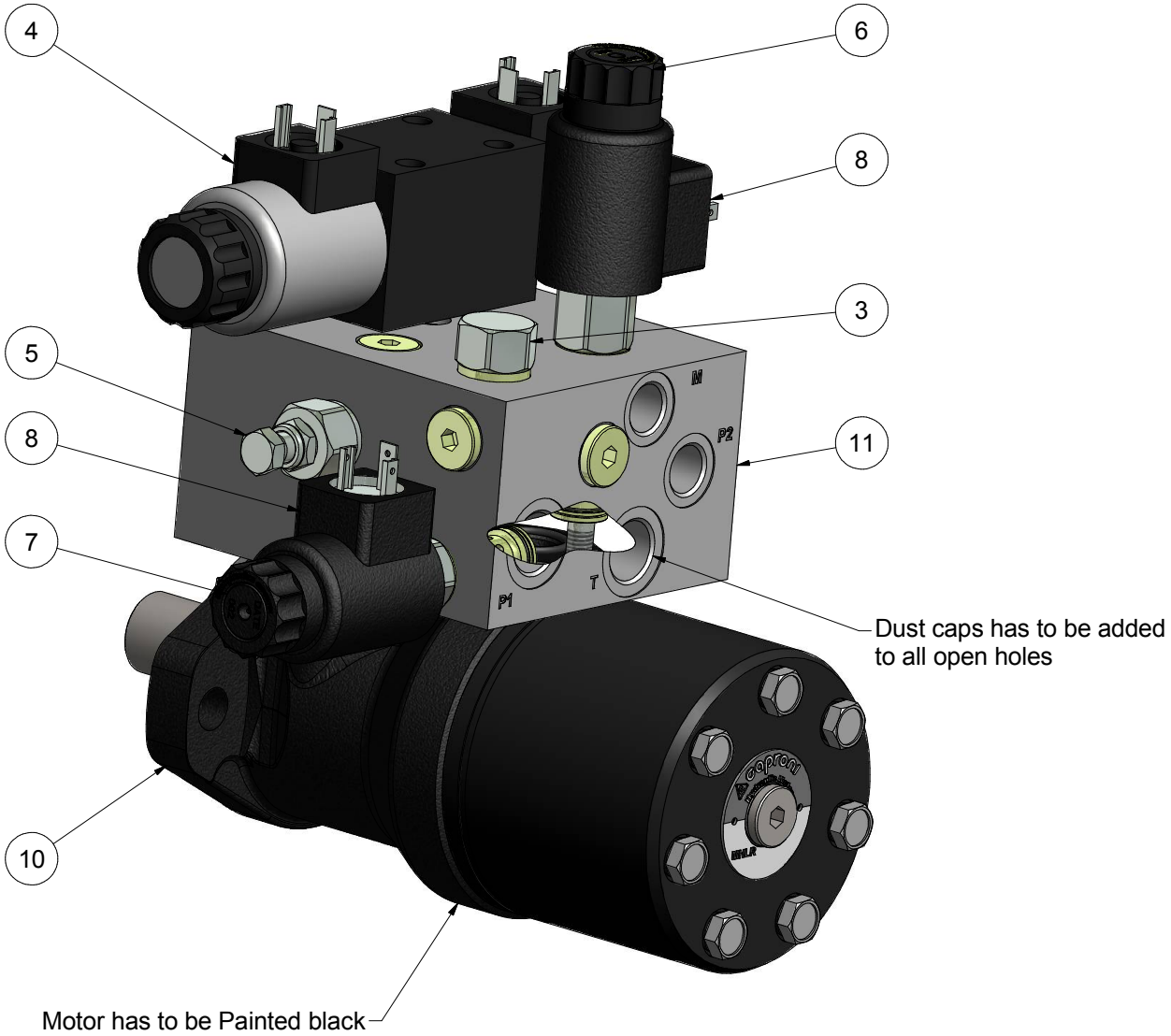

Alle kanter reifes
Breake all edges

REV	DESCRIPTION	DATE	APPROVED
A	Made	28-01-2014	KC

REVISION HISTORY

This document is strictly confidential and must on no account be reproduced or copied to third parties.
HEDENSTED GRUPPEN A/S

Hedensted Gruppen

Scale: 1 : 1,5	Ikke angivet tolerancer iht./ Not specificed tolerance according to: DS/ISO 2768-m	Sheet size: A3
	Overfl. beskaffenhed/Surface properties: No	Sheet: 1 /1
Part No.: M100519	Material:	
Description: Motor assembly for mixer		
Description: F100/125/160		

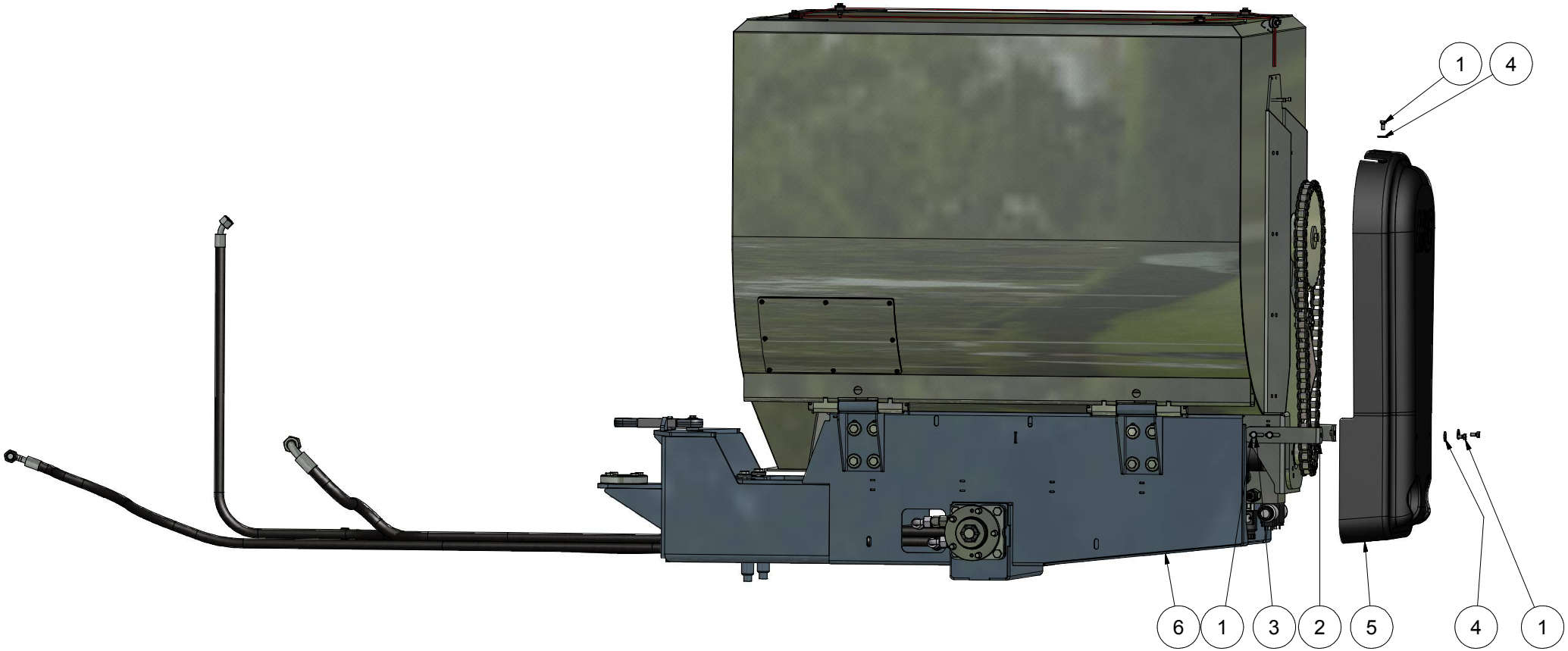

PARTS LIST			
ITEM	QTY	PART NUMBER	DESCRIPTION
1	7	11408016	Hexagon bolt M8x16 FZB
2	2	250082	Brace for chain cover
3	4	82108000	Washer M8 FZB
4	3	82608000	Washer ø8x24x2 DIN9021A
5	1	M100023	Chain cover
6	1	M100119	900 Rear assembly 6

REVISION HISTORY			
A	Made	21-12-2011	KC
REV	DESCRIPTION	DATE	APPROVED

Alle kanter reifes
Breake all edges

This document is strictly confidential and must on no account be copied or made available to third parties.
HEDENSTED GRUPPEN A/S

Hedensted Gruppen

Scale: 1 : 10	Ikke angivet tolerancer iht./ Not specificed tolerance according to: DS/ISO 2768-m	Sheet size: A3
	Overfl. beskaffenhed/Surface properties: No	Sheet: 1 /1
Part No.: M100120	Material:	
Description: 900 Rear assembly 7		
Description:		

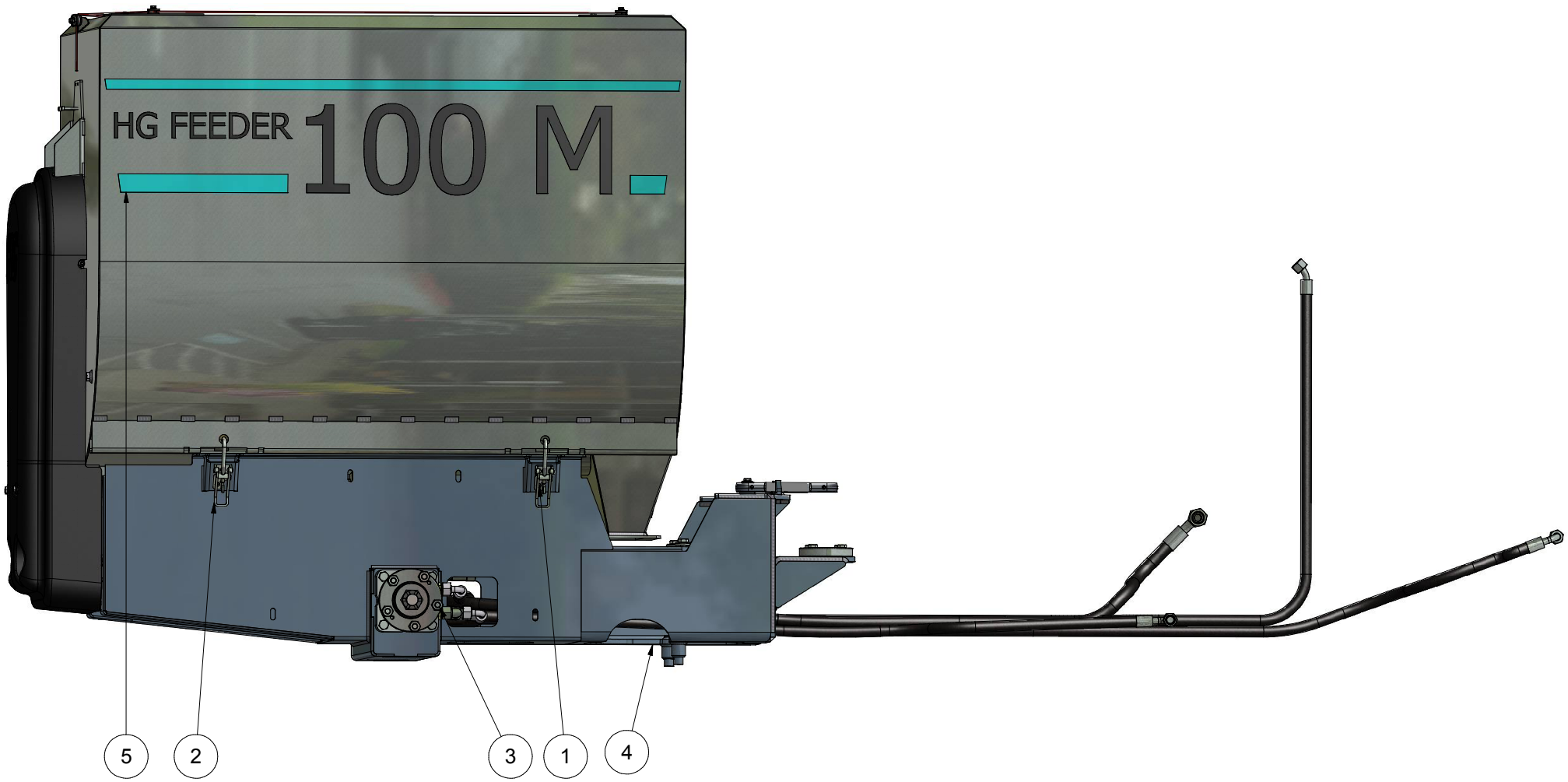

PARTS LIST			
ITEM	QTY	PART NUMBER	DESCRIPTION
1	6	20405010	Hexagon countersunk M5x10 FZB
2	2	425944	Latch clamp 703HL
3	10	479910	Wheel nut M12x1,5 NV22 60`FZB
4	1	M100120	900 Rear assembly 7
5	2	M100149	HG Feeder 100 M

REVISION HISTORY			
A	Made	21-12-2011	KC
B	Part List updated	27-06-2013	KC
REV	DESCRIPTION	DATE	APPROVED

Alle kanter reifes
Breake all edges

This document is strictly confidential and must on no ground be reproduced or shared with third parties.
HEDENSTED GRUPPEN A/S

Hedensted Gruppen

Scale: 1 : 9	Ikke angivet tolerancer iht./ Not specificed tolerance according to: DS/ISO 2768-m	Sheet size: A3
	Overfl. beskaffenhed/Surface properties: No	Sheet: 1 /1
Part No.: M100122	Material:	
Description: 900 Container unit		
Description:		

PARTS LIST			
ITEM	QTY	PART NUMBER	DESCRIPTION
1	5	11408016	Hexagon bolt M8x16 FZB
2	1	12908025	Hexagon bolt m8 x 25 - A2
3	1	17908000	Self-locking nut M8 FZB
4	1	250075	1200 Container unit
5	1	250076	Pulling unit
6	0,4 m	250210	Spiral pvc inv. ø44
7	1	30048	ID plate Feeder 125 M
8	1	4208000	Washe type TBRSB 8,4x26x5 FZB
9	6,0 l	476705	Engine oil Q8 T520 15W-40
10	40,0 l	476721	Hydraulic oil Q8 handel 46
11	4	477163	Bopnded seal washer 3/8"
12	2	477222	Banjo bolt 3/8" bsp
13	0,33 m	600595	Spiral pipe SPS25
14	2	82608000	Washer ø8x24x2 DIN9021A

PARTS LIST			
ITEM	QTY	PART NUMBER	DESCRIPTION
15	4	83608040	Washer Ø42x9x4 FZB
16	1	M100089	Spacer for feedcan
17	2	M100102	Steering cylinder stroke 160
18	1	M100216	Labels for Feeder
19	1	M100217	Waste tray
20	1	M100219	Brace for feed can

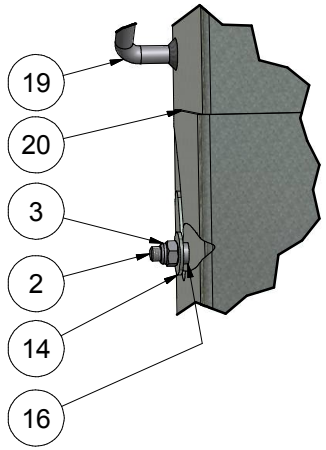

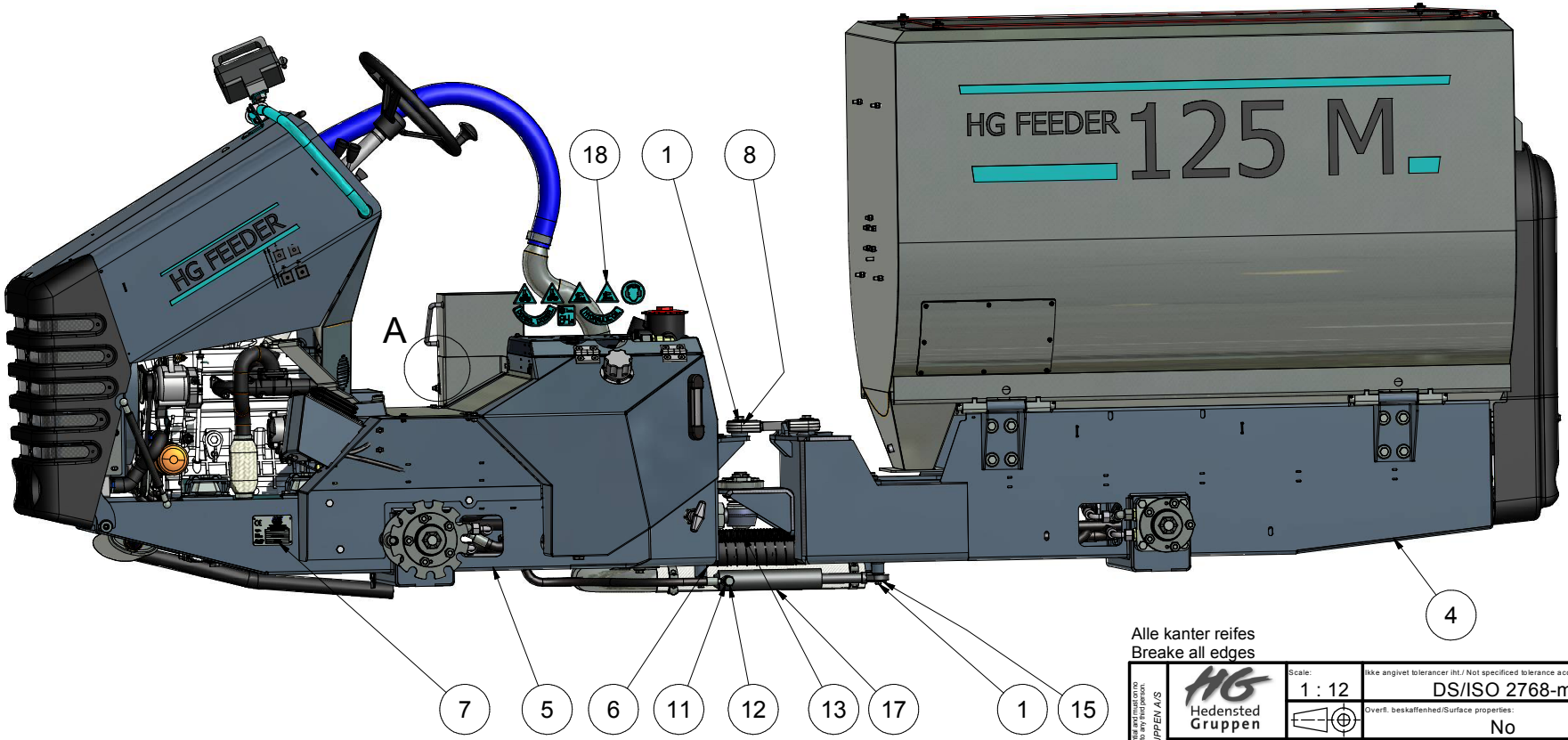

Alle kanter reifes
Breake all edges

REV	DESCRIPTION	DATE	APPROVED
A	Made	28-06-2013	KC
B	Partlist updated	01-04-2014	KC

REVISION HISTORY

This document is strictly confidential and must on no account be reproduced or made available to third parties.
HEDENSTED GRUPPEN A/S

Hedensted Gruppen

Scale: 1 : 12	Ikke angivet tolerancer iht./ Not specificed tolerance according to: DS/ISO 2768-m	Sheet size: A3
	Overfl. beskaffenhed/Surface properties: No	Sheet: 1 /1
Part No.: M100347	Material:	
Description: Base module 125M		
Description:		

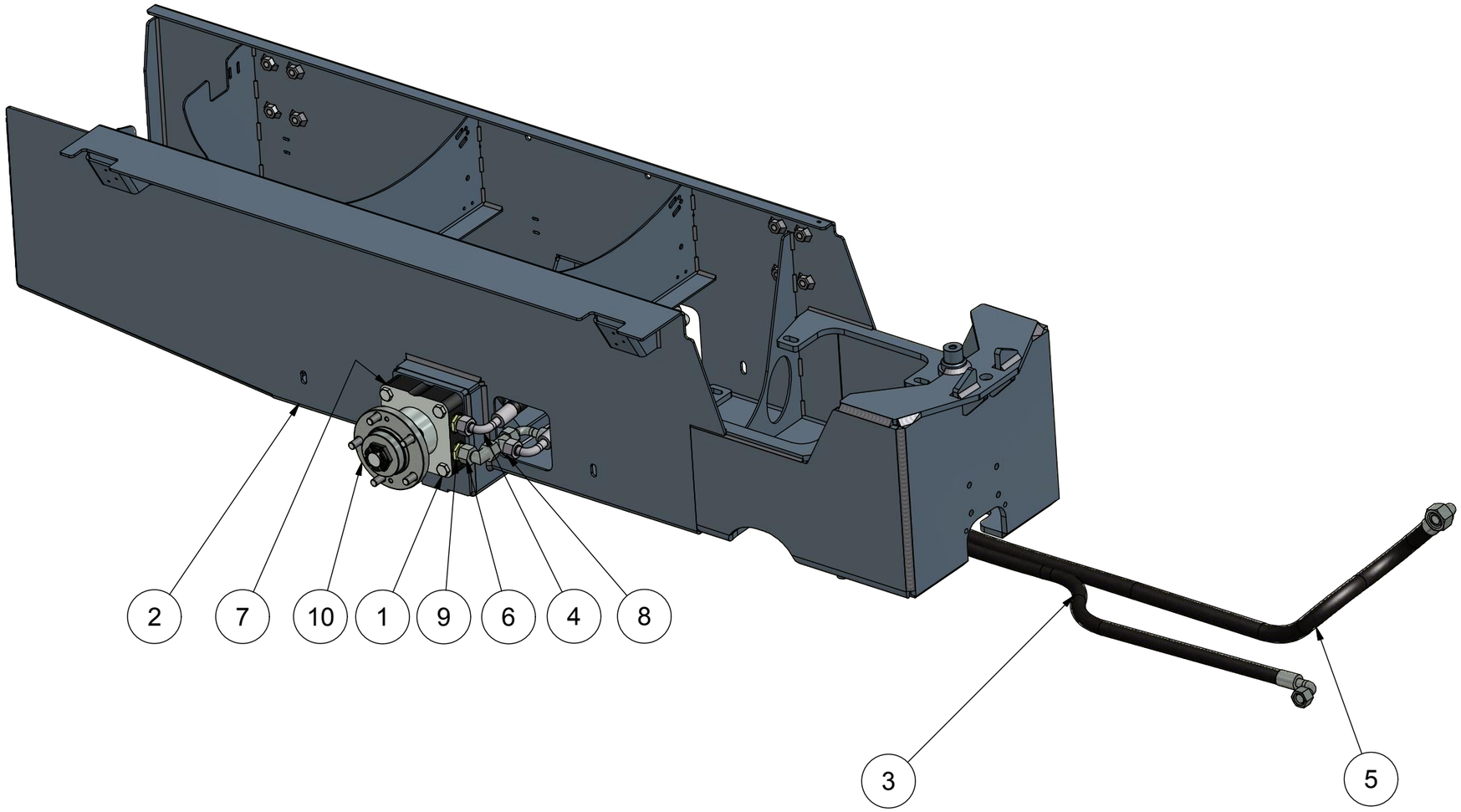

PARTS LIST			
ITEM	QTY	PART NUMBER	DESCRIPTION
1	8	11412055	Hexagon bolt 12 x 55 FZB
2	1	250169	1200 Rear frame
3	1	250225	Hydraulic hose no 14
4	2	250226	Hydraulic hose no 15
5	1	250230	Hydraulic hose no 19
6	2	424048	Adjustible elbow 15L DM
7	2	430105	Delta 252ccm wheelmotor
8	2	477072	Adjustible tee SL15 L
9	4	477120	Male stud Ø15-L 1/2" DM
10	2	M100041	Wheel hub assembly slim

REVISION HISTORY			
REV	DESCRIPTION	DATE	APPROVED
A	Made	08-12-2011	KC
B	Part List updated	26-06-2013	KC

Alle kanter reifes
Breake all edges

This document is strictly confidential and must on no account be copied or disclosed to any third person.
HEDENSTED GRUPPEN A/S

Hedensted Gruppen

Scale: 1 : 8	Ikke angivet tolerancer iht./ Not specificed tolerance according to: DS/ISO 2768-m		Sheet size: A3
	Overfl. beskaffenhed/Surface properties: No		Sheet: 1 /2
Part No.: M100090	Material:		
Description: 1200 Rear assembly 1			
Description:			

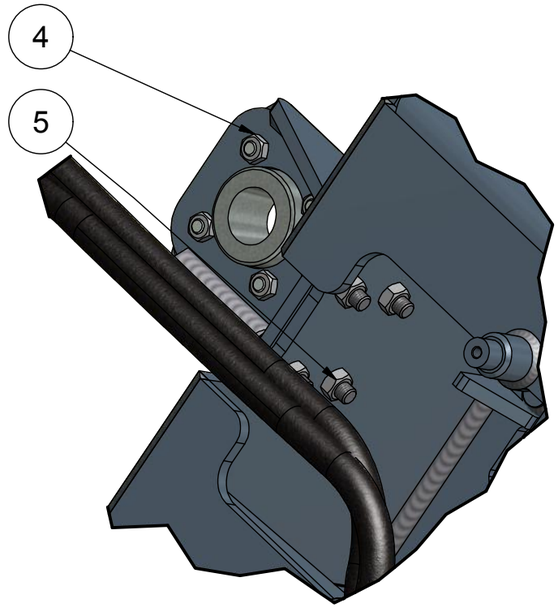

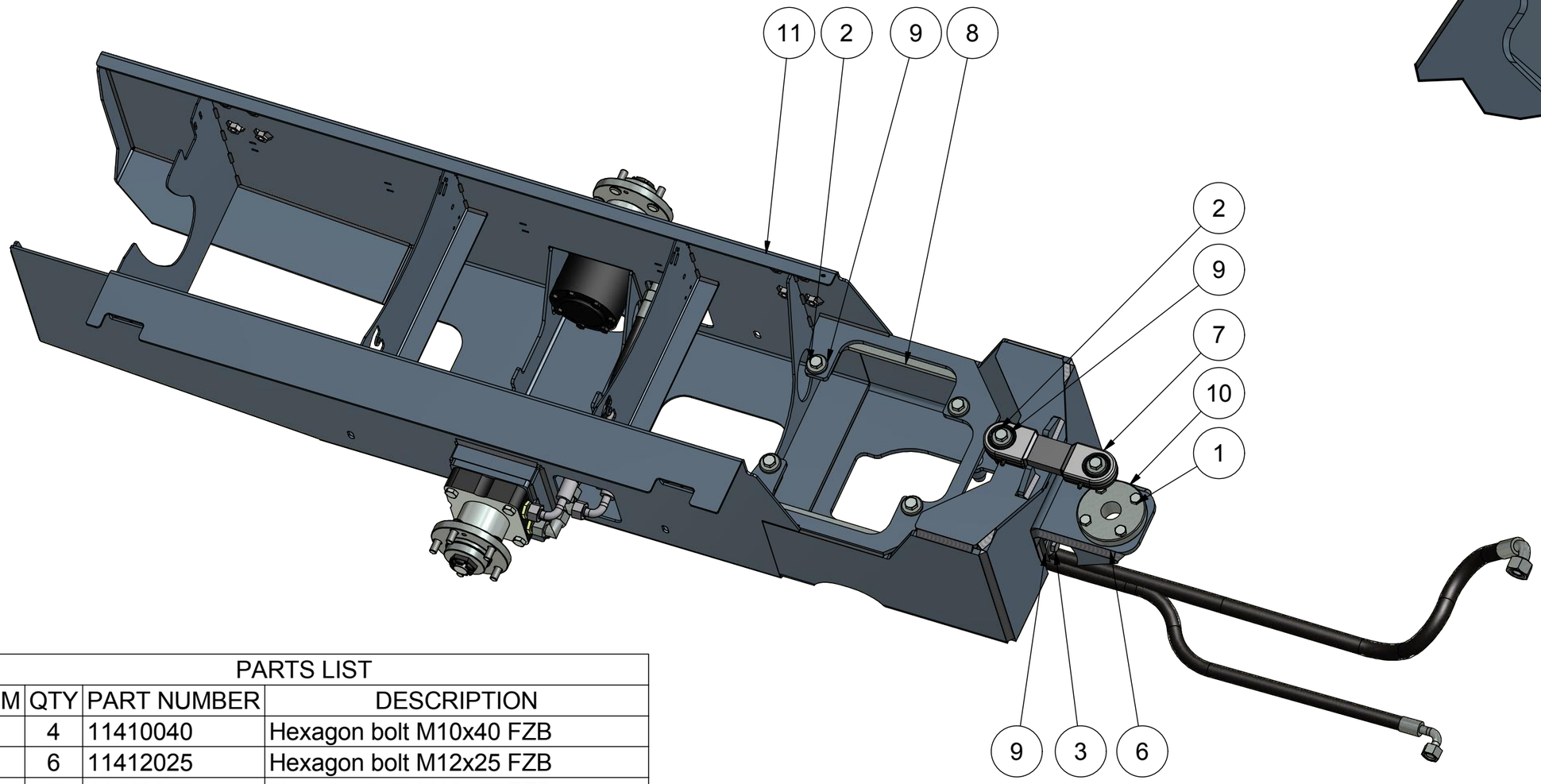

PARTS LIST			
ITEM	QTY	PART NUMBER	DESCRIPTION
1	4	11410040	Hexagon bolt M10x40 FZB
2	6	11412025	Hexagon bolt M12x25 FZB
3	4	11412045	Hexagon bolt M12x45 FZB
4	4	1510000	Nut M10 FZB
5	4	1512000	Nut M12 FZB
6	1	250084	Brace for steering
7	1	250135	Sterring link
8	2	250141	Tension plate
9	10	4212000	Washe type TBRSB 13x36x6 FZB
10	1	425425	Bushing for ball joint
11	1	M100090	1200 Rear assembly 1

REVISION HISTORY			
A	Made	26-05-2011	KC
B	Part List updated	26-06-2013	KC
REV	DESCRIPTION	DATE	APPROVED

Alle kanter reifes
Breake all edges

This document is strictly confidential and must on no account be copied or disclosed to any third person.
HEDENSTED GRUPPEN A/S

Hedensted Gruppen

Scale: 1 : 8	Ikke angivet tolerancer iht./ Not specificed tolerance according to: DS/ISO 2768-m		Sheet size: A3
	Overfl. beskaffenhed/Surface properties: No		Sheet: 1 /2
Part No.: M100091	Material:		
Description: 1200 Rear assembly 2			
Description:			

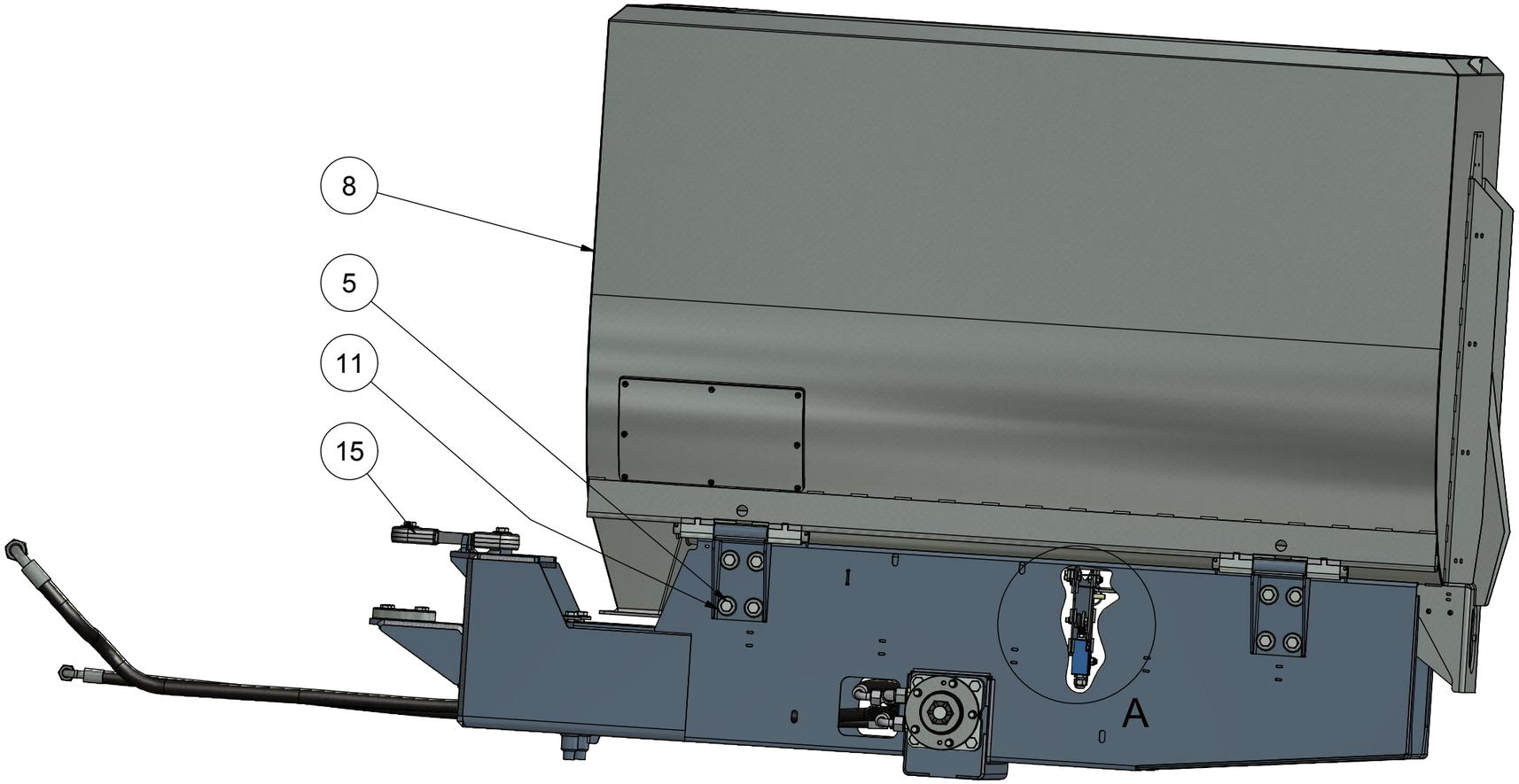

A (1 : 5)

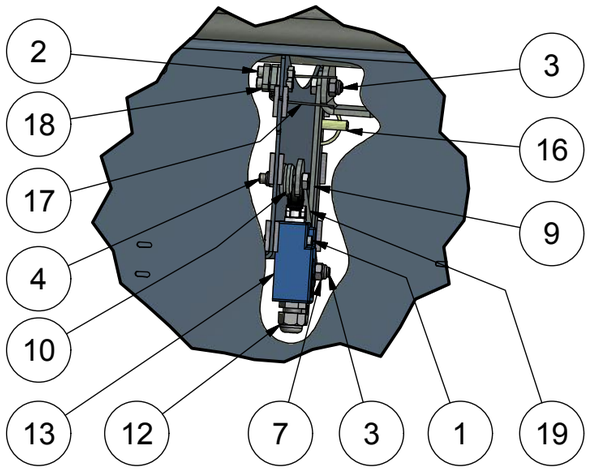

PARTS LIST			
ITEM	QTY	PART NUMBER	DESCRIPTION
1	2	10204035	Bolt unbraco cyl 4x35 FZB
2	2	10205025	Bolt unbrako cyl 5x25 FZB
3	2	11408020	Hexagon bolt M8x20 FZB
4	1	11408035	Hexagon bolt M8x35 FZB
5	8	11412025	Hexagon bolt M12x25 FZB
6	2	17904000	Self-locking nut M4 FZB
7	3	17908000	Self-locking nut M8 FZB
8	1	250095	Container 1200 assembly 1
9	1	250124	Lock brace
10	2	4208000	Washe type TBRSB 8,4x26x5 FZB
11	8	4212000	Washe type TBRSB 13x36x6 FZB
12	1	600460	Cable gland M16
13	1	600972	Limith switch
14	2	82104000	Washer M4 FZB
15	1	M100091	1200 Rear assembly 2
16	1	M100093	Tractor pin Ø8
17	1	M100100	Torsion spring double
18	3	M100101	Plate for spring
19	1	M100168	Lock brace part 2

REVISION HISTORY			
REV	DESCRIPTION	DATE	APPROVED
A	Made	08-12-2011	KC
B	Limit switch replased	19-06-2012	KC

Alle kanter reifes
Breake all edges

This document is strictly confidential and must on no account be copied or disclosed to any third person.
HEDENSTED GRUPPEN A/S

Hedensted Gruppen

Scale: 1 : 10	Ikke angivet tolerancer iht./ Not specificed tolerance according to: DS/ISO 2768-m		Sheet size: A3
	Overfl. beskaffenhed/Surface properties: No		Sheet: 1 /2
Part No.: M100092	Material:		
Description: 1200 Rear assembly 3			
Description:			

PARTS LIST			
ITEM	QTY	PART NUMBER	DESCRIPTION
1	8	19905000	Self-locking nut M5 Inox A2
2	1	250096	Container for feeder 1200
3	2	250114	Hinge for container
4	2	250140	Shaft for hinge
5	8	81805000	Washer M5 Inox A2
6	4	89404036	Cotter pin Ø4x36 FZB
7	1	M100027	Hatch for feed container
8	1	M10135	Gasket for hatch

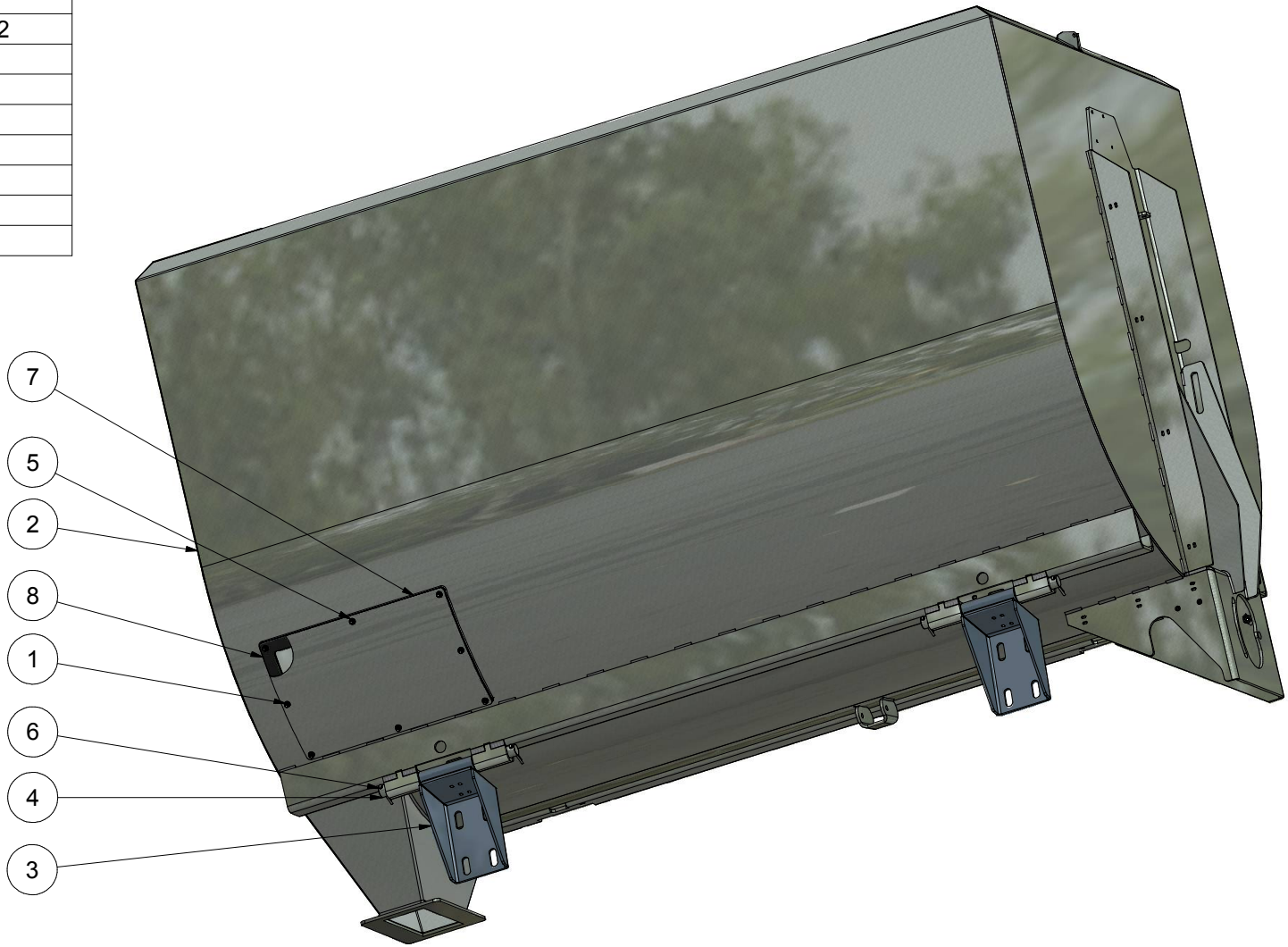

Alle kanter reifes
Breake all edges

REV	DESCRIPTION	DATE	APPROVED
A	Made	12-12-2011	KC

REVISION HISTORY

This document is strictly confidential and must on no terms be reproduced or shared with third parties.
HEDENSTED GRUPPEN A/S

Hedensted Gruppen

Scale: 1 : 8	Ikke angivet tolerancer iht./ Not specificed tolerance according to: DS/ISO 2768-m	Sheet size: A3
	Overfl. beskaffenhed/Surface properties: No	Sheet: 1 /1
Part No.: 250095	Material:	
Description: Container 1200 assembly 1		
Description:		

PARTS LIST			
ITEM	QTY	PART NUMBER	DESCRIPTION
1	1	11412035	Hexagon bolt M12x35 FZB
2	10	12908025	Hexagon bolt m8 x 25 - A2
3	4	12912035	Hexagon bolt M12x35 A2
4	10	17908000	Self-locking nut M8 FZB
5	1	197044	Key 10x8x30
6	1	250088	Bushing for worm
7	1	250172	Hub assembly 2 for worm
8	1	426384	Grease fitting M10x1 straight
9	1	M100035	Mixer for 1200-1600
10	1	M100036	Sprocket Z-32 1inch Ø35
11	1	M100044	Hub complete for mixer
12	1	M100092	1200 Rear assembly 3
13	1	M100095	Thread pipe
14	1	M100096	Washer for sprocket

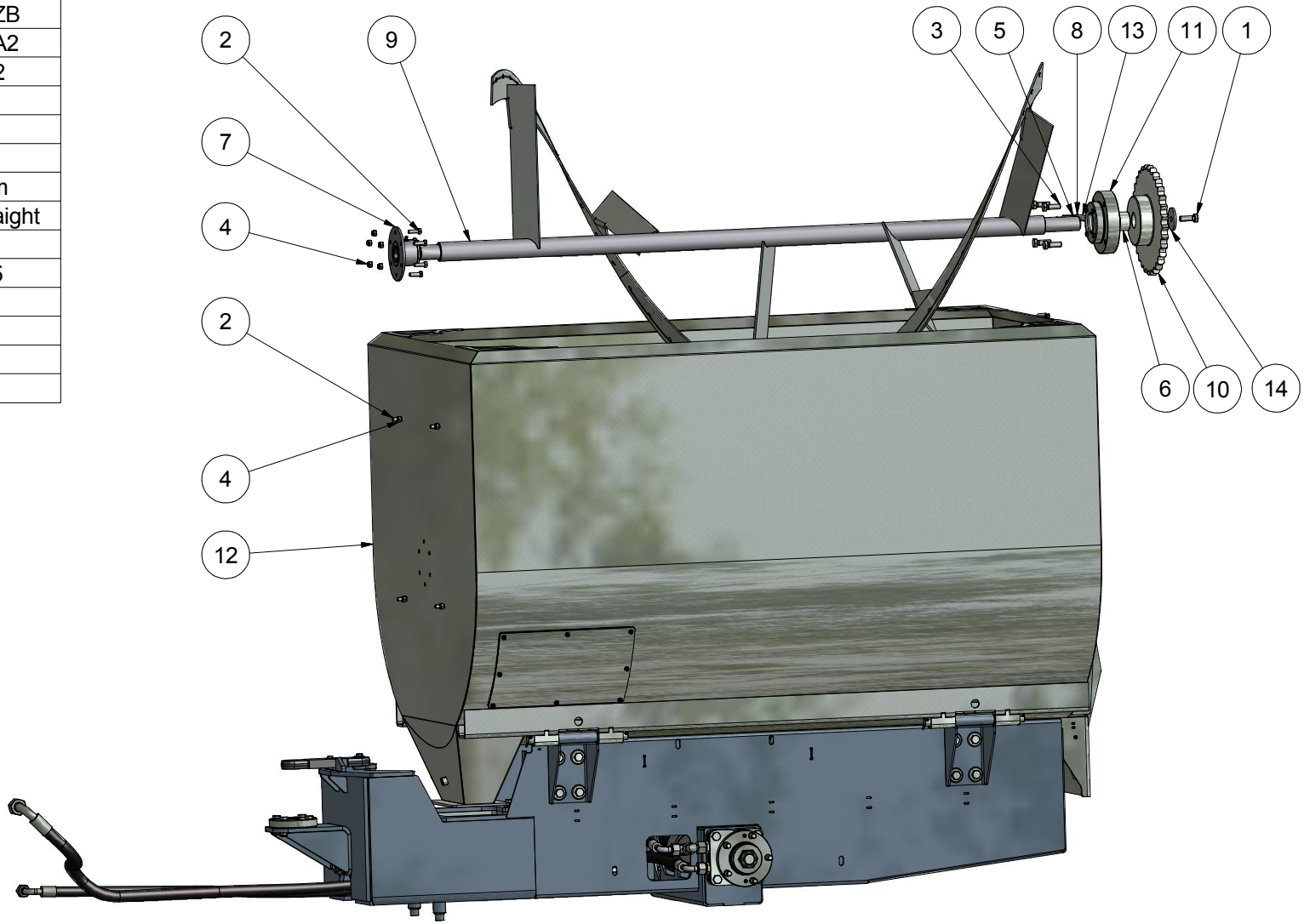

Alle kanter reifes
Breake all edges

REV	DESCRIPTION	DATE	APPROVED
A	Made	18-12-2011	KC

REVISION HISTORY

This document is strictly confidential and must on no account be copied or made available to third parties.
HEDENSTED GRUPPEN A/S

Hedensted Gruppen

Scale: 1 : 11	Ikke angivet tolerancer iht./ Not specificed tolerance according to: DS/ISO 2768-m	Sheet size: A3
	Overfl. beskaffenhed/Surface properties: No	Sheet: 1 /1
Part No.: M100094	Material:	
Description: 1200 Rear assembly 4		
Description:		

PARTS LIST			
ITEM	QTY	PART NUMBER	DESCRIPTION
1	6	12606000	Nut M6 A2
2	6	12906030	Hexagon bolt m6x30 A2
3	1	425934	Wire emergency stop switch
4	6	430465	Wheel for wire emergency stop
5	1	600455	Cabel gland M20 Ø5-12
6	6	82106000	Washer M6 FZB
7	6	M100038	Bushing for wire
8	4,5 m	M100039	Inox wire 7x7 Ø3
9	1	M100094	1200 Rear assembly 4

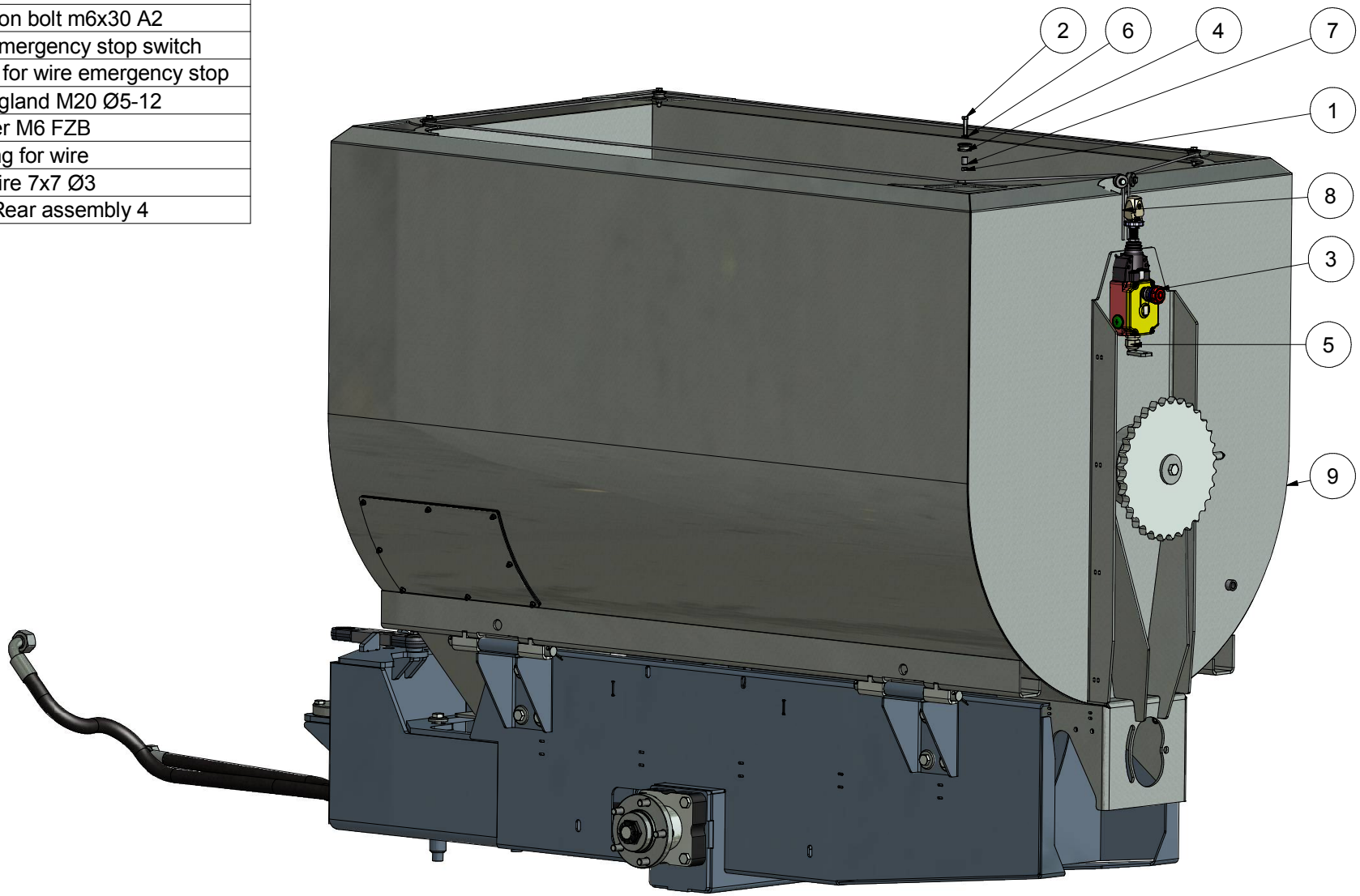

Alle kanter reifes
Breake all edges

REV	DESCRIPTION	DATE	APPROVED
A	Made	08-12-2011	KC
B	Part List updated	27-06-2013	KC

REVISION HISTORY

This document is strictly confidential and must on no account be copied or made available to third parties.
HEDENSTED GRUPPEN A/S

Hedensted Gruppen

Scale: 1 : 8	Ikke angivet tolerancer iht./ Not specificed tolerance according to: DS/ISO 2768-m	Sheet size: A3
	Overfl. beskaffenhed/Surface properties: No	Sheet: 1 /1
Part No.: M100097	Material:	
Description: 1200 Rear assembly 5		
Description:		

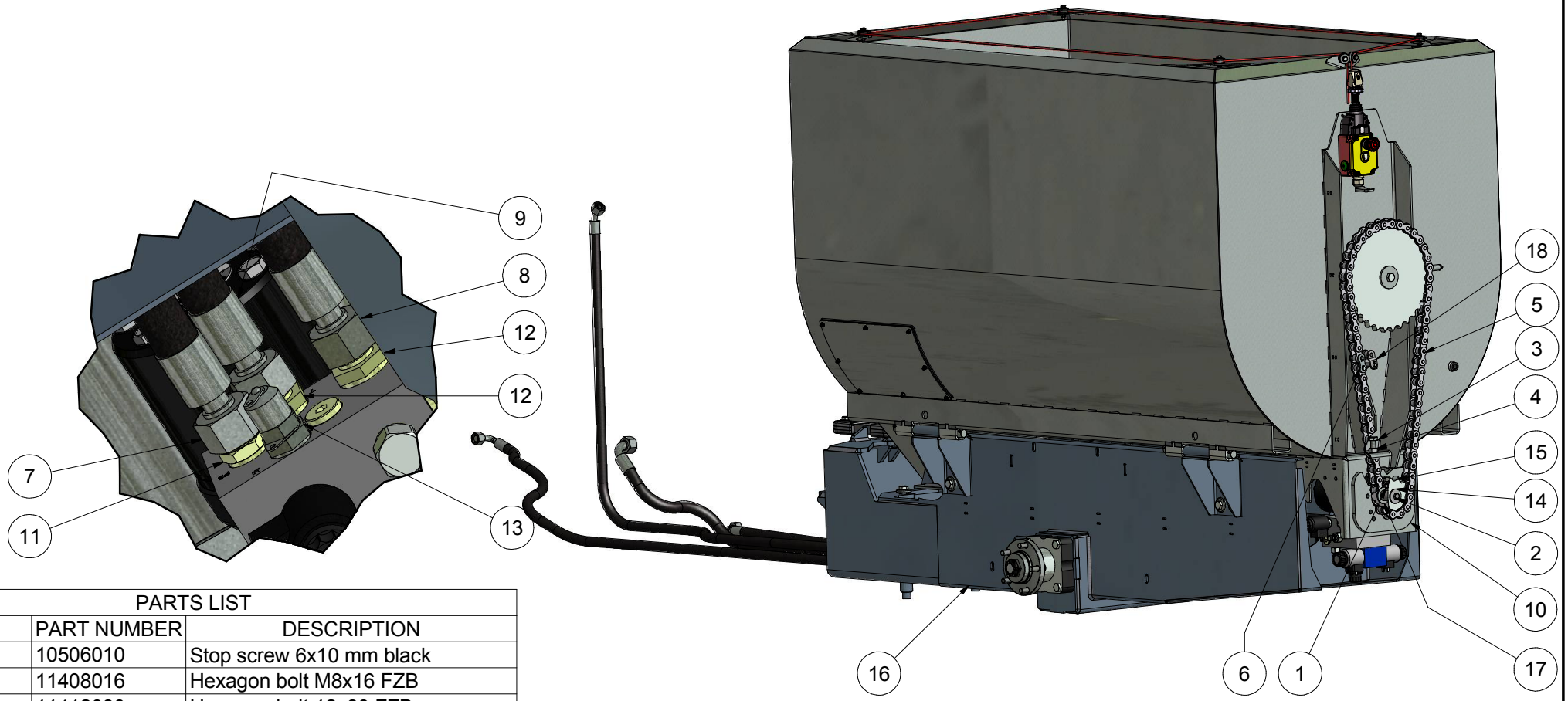

PARTS LIST			
ITEM	QTY	PART NUMBER	DESCRIPTION
1	1	10506010	Stop screw 6x10 mm black
2	1	11408016	Hexagon bolt M8x16 FZB
3	1	11412080	Hexagon bolt 12x80 FZB
4	1	1512000	Nut M12 FZB
5	1,700 m	190580	Rolerchain 16B L=1625,6
6	1	190582	Chain connection link 16B 25,4
7	1	250224	Hydraulic hose no 13
8	1	250231	Hydraulic hose no 20
9	1	250232	Hydraulic hose no 21
10	1	25416	Container sheet 11
11	1	477117	Male stud 15L 3/8"
12	2	477120	Male stud Ø15-L 1/2" DM
13	1	477229	Male test nipple 3/8" BSP
14	1	4809335	Washer type SRKB ø9x35x3
15	1	M100037	Sprocket Z-11 1inch Ø25
16	1	M100097	1200 Rear assembly 5
17	1	M100099	Spacer for sprocket
18	1	M100412	Half chain link 16B
19	1	M100519	Motor assembly for mixer

REVISION HISTORY			
A	Made	08-12-2011	KC
B	Part List updated	27-06-2013	KC
C	Part List updated	26-05-2015	KC
REV	DESCRIPTION	DATE	APPROVED

Alle kanter reifes
Breake all edges

This document is strictly confidential and must on no account be used, copied or shared with third parties.
HEDENSTED GRUPPEN A/S

Hedensted Gruppen

Scale: 1 : 10	Ikke angivet tolerancer iht./ Not specificed tolerance according to: DS/ISO 2768-m	Sheet size: A3
	Overfl. beskaffenhed/Surface properties: No	Sheet: 1 /2
Part No.: M100098	Material:	
Description: 1200 Rear assembly 6		
Description:		

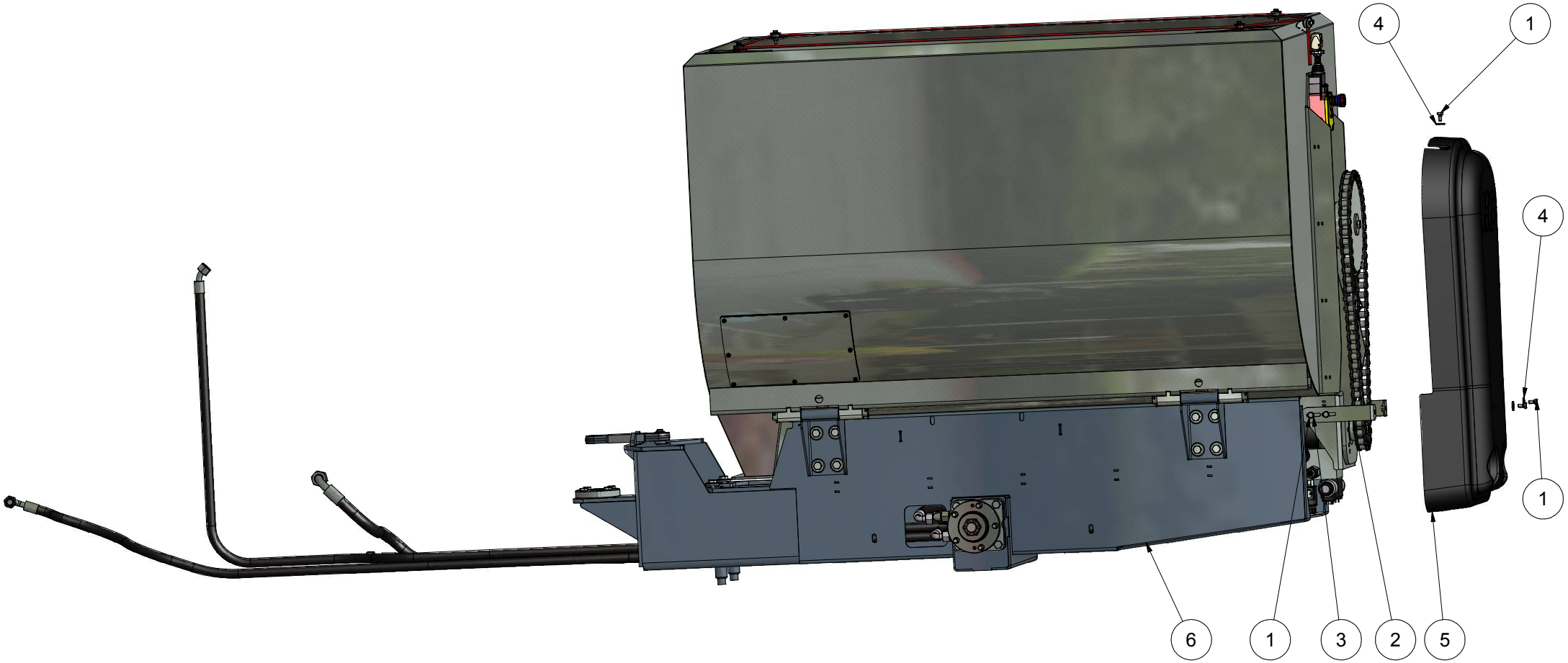

PARTS LIST			
ITEM	QTY	PART NUMBER	DESCRIPTION
1	7	11408016	Hexagon bolt M8x16 FZB
2	2	250082	Brace for chain cover
3	4	82108000	Washer M8 FZB
4	3	82608000	Washer ø8x24x2 DIN9021A
5	1	M100023	Chain cover
6	1	M100098	1200 Rear assembly 6

REVISION HISTORY			
A	Made	08-12-2011	KC
REV	DESCRIPTION	DATE	APPROVED

Alle kanter reifes
Breake all edges

This document is strictly confidential and must on no ground be reproduced or copied to third parties.
HEDENSTED GRUPPEN A/S

Hedensted Gruppen

Scale: 1 : 10	Ikke angivet tolerancer iht./ Not specificed tolerance according to: DS/ISO 2768-m	Sheet size: A3
	Overfl. beskaffenhed/Surface properties: No	Sheet: 1 /1
Part No.: M100103	Material:	
Description: 1200 Rear assembly 7		
Description:		

PARTS LIST			
ITEM	QTY	PART NUMBER	DESCRIPTION
1	6	20405010	Hexagon countersunk M5x10 FZB
2	2	425944	Latch clamp 703HL
3	10	479910	Wheel nut M12x1,5 NV22 60`FZB
4	1	M100103	1200 Rear assembly 7
5	2	M100148	HG Feeder 125 M

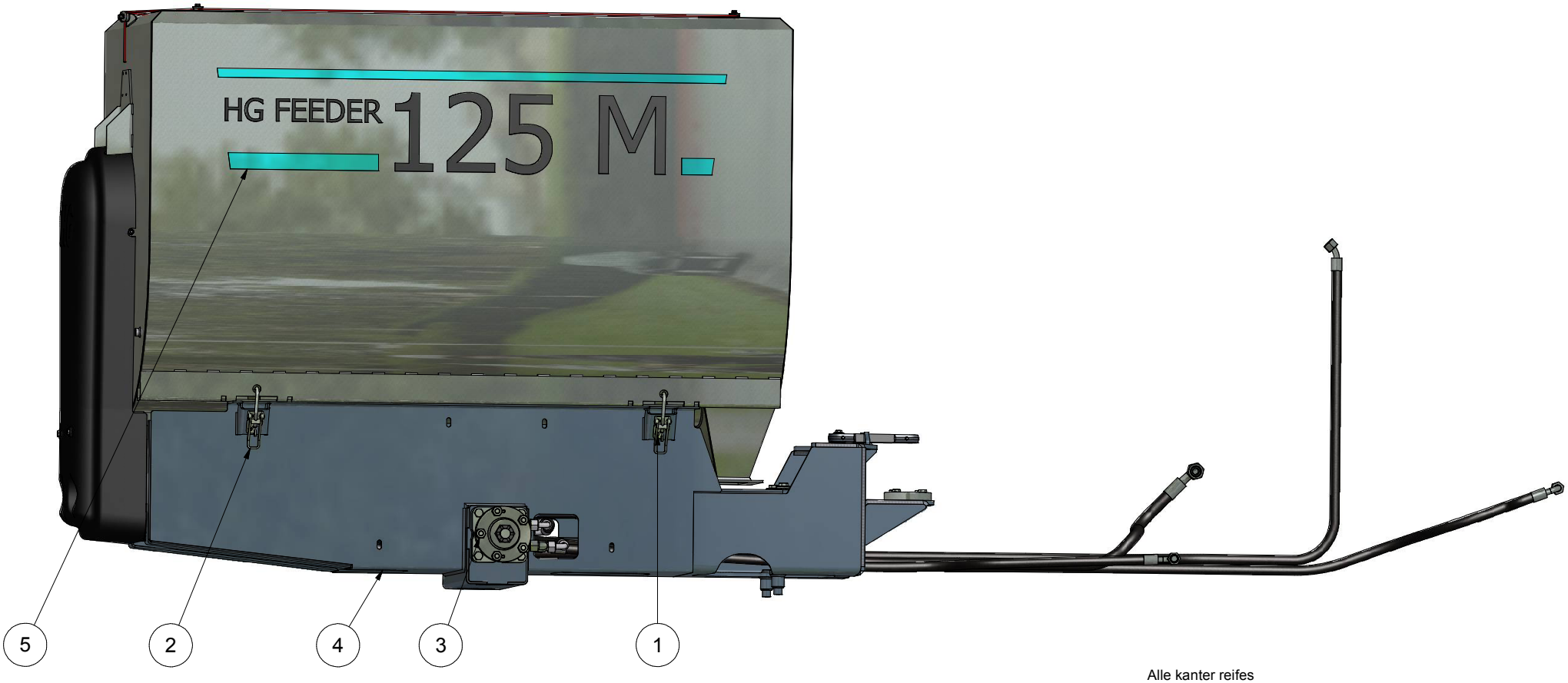

Alle kanter reifes
Breake all edges

REV	DESCRIPTION	DATE	APPROVED
A	Made	12-12,2011	KC
B	Part List updated	27-06-2013	KC

REVISION HISTORY

This document is strictly confidential and must on no reason be reproduced, copied or shared with others.
HEDENSTED GRUPPEN A/S

Hedensted Gruppen

Scale: 1 : 10	Ikke angivet tolerancer iht./ Not specificed tolerance according to: DS/ISO 2768-m	Sheet size: A3
	Overfl. beskaffenhed/Surface properties: No	Sheet: 1 /1
Part No.: 250075	Material:	
Description: 1200 Container unit		
Description:		

PARTS LIST			
ITEM	QTY	PART NUMBER	DESCRIPTION
1	5	11408016	Hexagon bolt M8x16 FZB
2	1	12908025	Hexagon bolt m8 x 25 - A2
3	1	17908000	Self-locking nut M8 FZB
4	1	250076	Pulling unit
5	0,4 m	250210	Spiral pvc inv. ø44
6	1	30053	ID plate Feeder 160M
7	1	4208000	Washe type TBRSB 8,4x26x5 FZB
8	2	474760	Rearwheel 23X8,50-12-6 TI-Trac
9	6,0 l	476705	Engine oil Q8 T520 15W-40
10	40,0 l	476721	Hydraulic oil Q8 handel 46
11	4	477163	Bopnded seal washer 3/8"
12	2	477222	Banjo bolt 3/8" bsp
13	0,33 m	600595	Spiral pipe SPS25
14	2	82608000	Washer ø8x24x2 DIN9021A
15	4	83608040	Washer Ø42x9x4 FZB
16	1	M100089	Spacer for feedcan

PARTS LIST			
ITEM	QTY	PART NUMBER	DESCRIPTION
17	2	M100102	Steering cylinder stroke 160
18	1	M100216	Labels for Feeder
19	1	M100217	Waste tray
20	1	M100219	Brace for feed can
21	1	M100280	160M Container unit

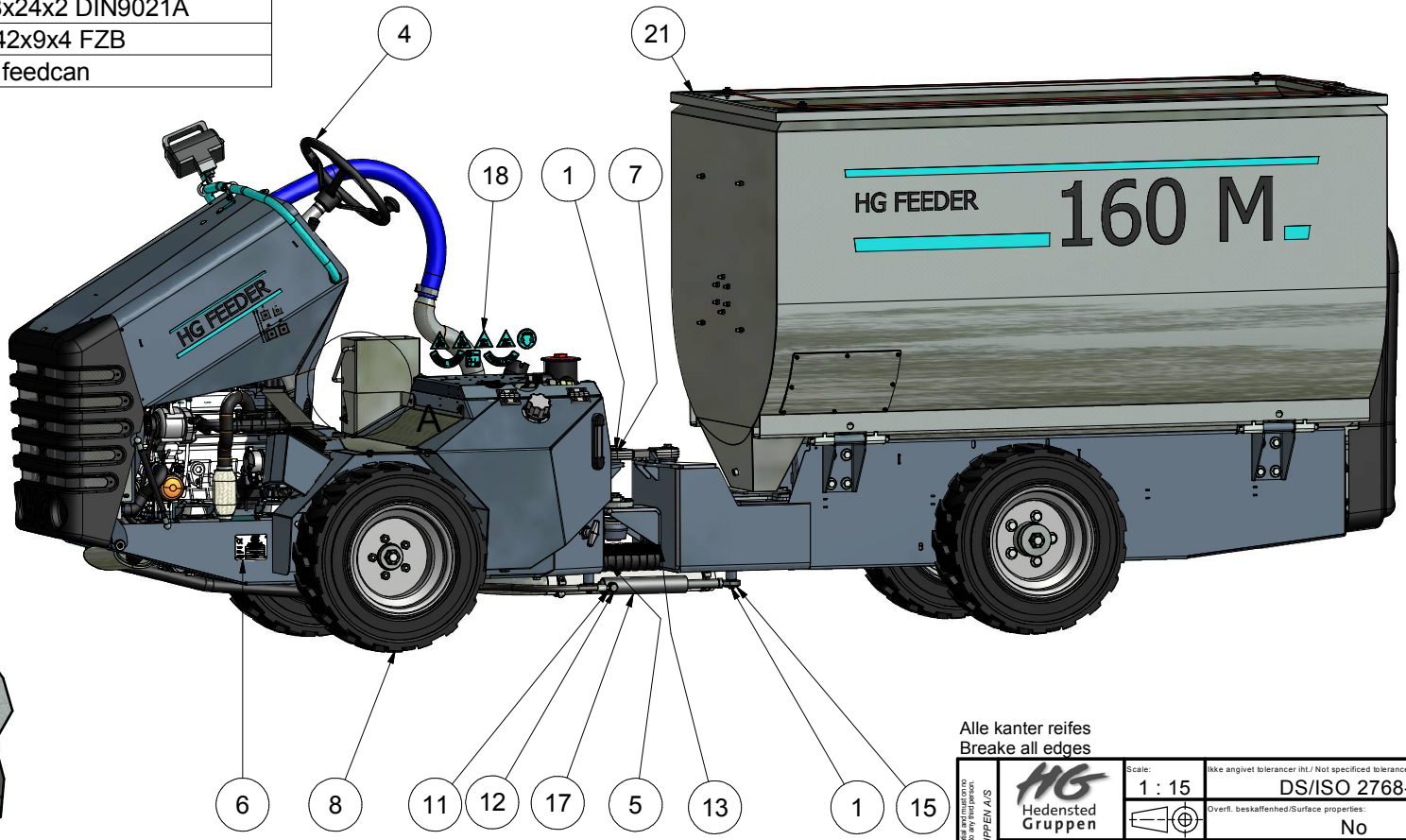

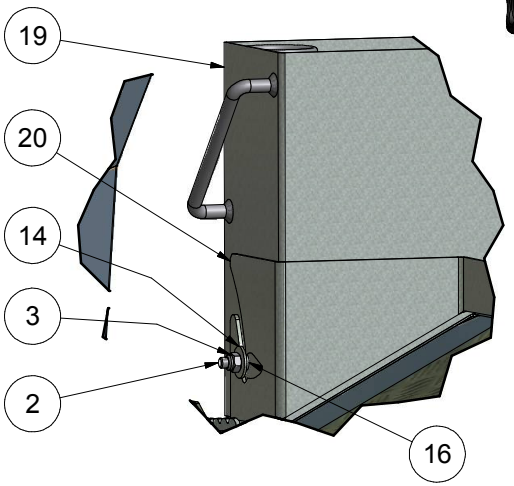

REV	DESCRIPTION	DATE	APPROVED
A	Made	20-06-2013	KC
B	Partlist updated	01-04-2014	KC

REVISION HISTORY

Alle kanter reifes
Breake all edges

This document is strictly confidential and must on no account be reproduced or made available to third parties.
HEDENSTED GRUPPEN A/S

Hedensted Gruppen

Scale: 1 : 15	Ikke angivet tolerancer iht./ Not specificed tolerance according to: DS/ISO 2768-m	Sheet size: A3
	Overfl. beskaffenhed/Surface properties: No	Sheet: 1 /1
Part No.: M100345	Material:	
Description: Base module 160M		
Description:		

PARTS LIST			
ITEM	QTY	PART NUMBER	DESCRIPTION
1	4	11410040	Hexagon bolt M10x40 FZB
2	6	11412025	Hexagon bolt M12x25 FZB
3	4	11412045	Hexagon bolt M12x45 FZB
4	4	1510000	Nut M10 FZB
5	4	1512000	Nut M12 FZB
6	1	250084	Brace for steering
7	1	250135	Sterring link
8	2	250141	Tension plate
9	10	4212000	Washe type TBRSB 13x36x6 FZB
10	1	425425	Bushing for ball joint
11	1	M100268	160M Rear assembly 1

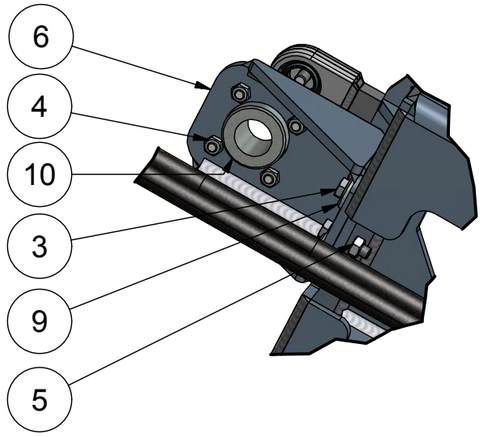

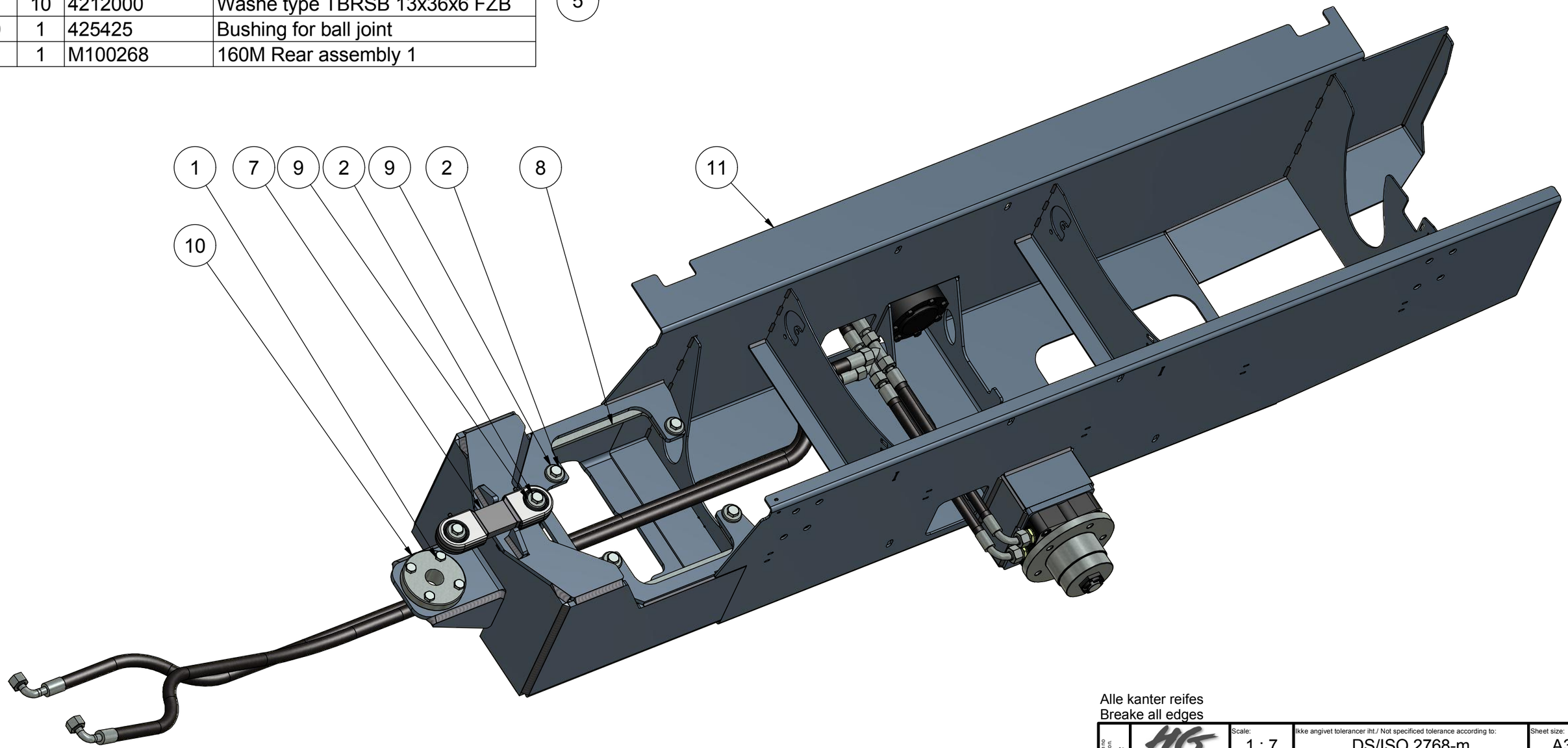

Alle kanter reifes
Breake all edges

REV	DESCRIPTION	DATE	APPROVED
A	Made	25-10-2012	KC

REVISION HISTORY

This document is strictly confidential and must on no account be copied or disclosed to any third person.
HEDENSTED GRUPPEN A/S

Hedensted Gruppen

Scale: 1 : 7	Ikke angivet tolerancer iht./ Not specificed tolerance according to: DS/ISO 2768-m		Sheet size: A3
	Overfl. beskaffenhed/Surface properties: No		Sheet: 1 /2
Part No.: M100270	Material:		
Description: 160M Rear assembly 2			
Description:			

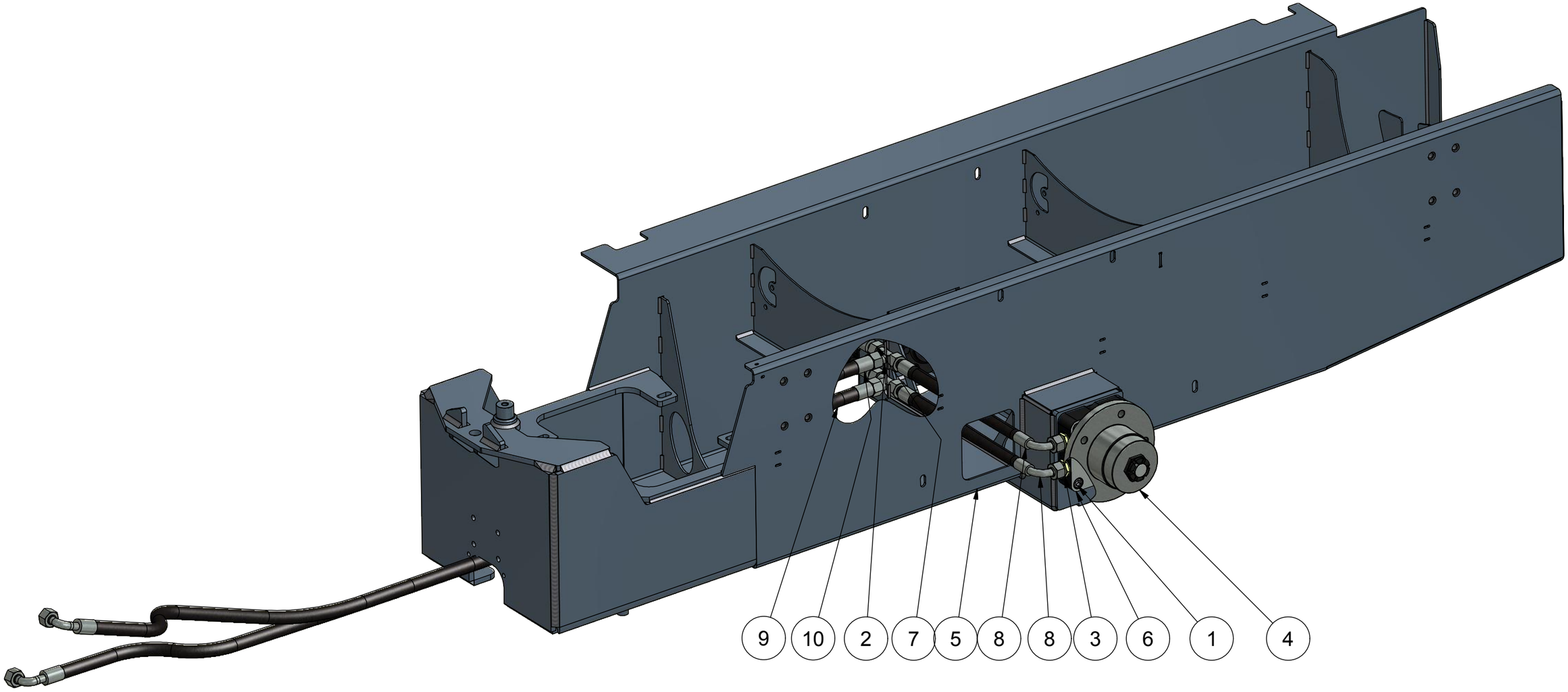

PARTS LIST			
ITEM	QTY	PART NUMBER	DESCRIPTION
1	8	10212050	Bolt.unbraco cyl 12x50 FZB
2	2	424162	Equal tee 15-L M22x1,5
3	4	477128	Male stud 12L 1/2"
4	2	M100266	Wheel hub F160M
5	1	M100267	Rear frame 160M
6	2	M100269	Delta 252ccm wheel motor
7	2	M100408	Hose rear right wheel motor
8	2	M100409	Hose rear left wheel motor
9	1	M100410	Hydraulic hose feeder 160
10	1	M100411	Hydraulic hose feeder 160

REVISION HISTORY			
REV	DESCRIPTION	DATE	APPROVED
A	Made	25-10-2012	KC
B	Part List updated	19-06-2013	KC

Alle kanter reifes
Breake all edges

This document is strictly confidential and must on no account be copied or disclosed to any third person.
HEDENSTED GRUPPEN A/S

Hedensted Gruppen

Scale: 1 : 7	Ikke angivet tolerancer iht./ Not specificed tolerance according to: DS/ISO 2768-m	Sheet size: A3
	Overfl. beskaffenhed/Surface properties: No	Sheet: 1 /2
Part No.: M100268	Material:	
Description: 160M Rear assembly 1		
Description:		

PARTS LIST			
ITEM	QTY	PART NUMBER	DESCRIPTION
1	2	10204035	Bolt unbraco cyl 4x35 FZB
2	2	10205025	Bolt unbrako cyl 5x25 FZB
3	2	11408020	Hexagon bolt M8x20 FZB
4	1	11408035	Hexagon bolt M8x35 FZB
5	8	11412025	Hexagon bolt M12x25 FZB
6	2	17904000	Self-locking nut M4 FZB
7	3	17908000	Self-locking nut M8 FZB
8	1	250124	Lock brace
9	2	4208000	Washe type TBRSB 8,4x26x5 FZB
10	8	4212000	Washe type TBRSB 13x36x6 FZB
11	1	600460	Cable gland M16
12	1	600972	Limith switch
13	2	82104000	Washer M4 FZB
14	1	M100093	Tractor pin Ø8
15	1	M100100	Torsion spring double
16	3	M100101	Plate for spring
17	1	M100168	Lock brace part 2
18	1	M100270	160M Rear assembly 2
19	1	M100272	Container 160M assembly 1

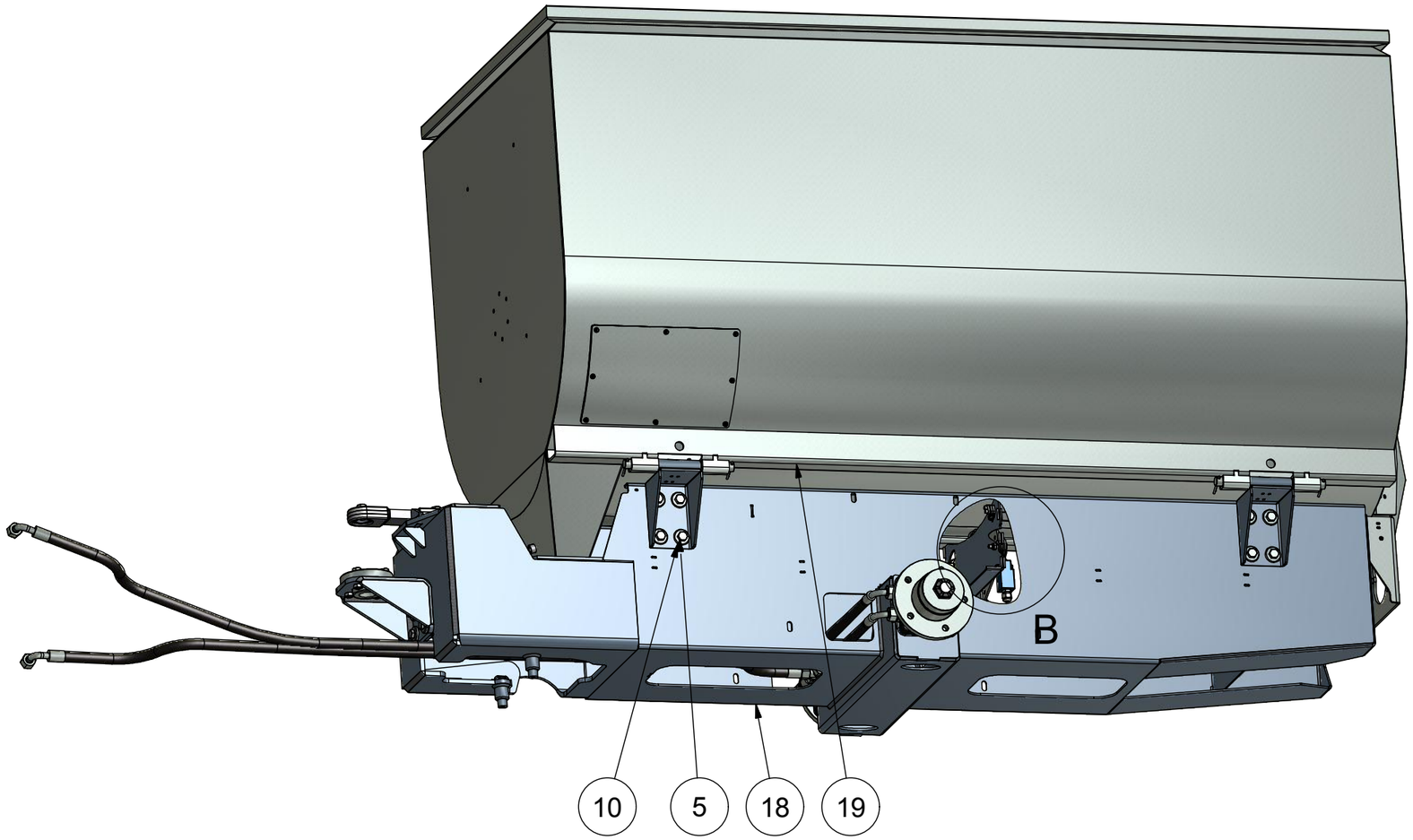

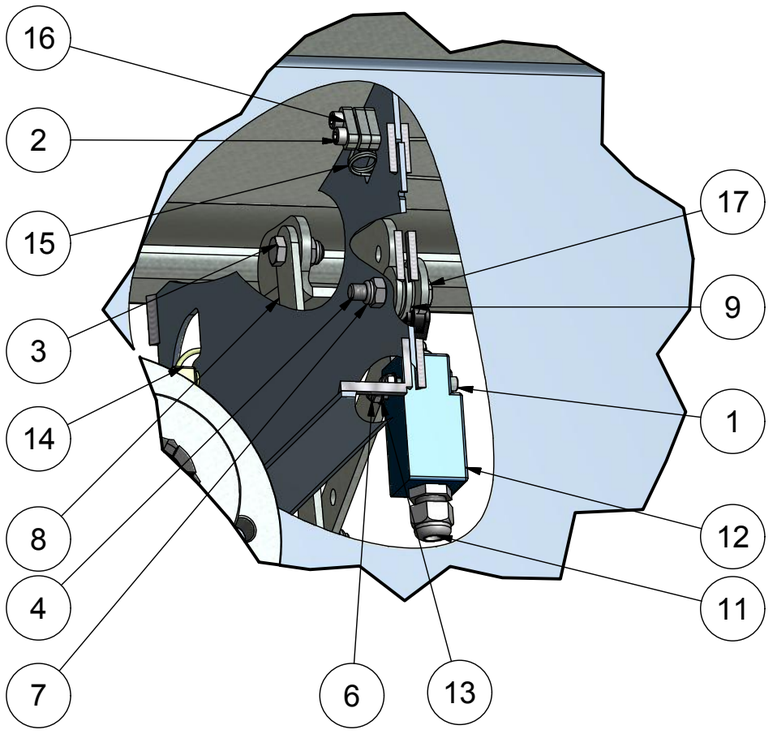

Alle kanter reifes
Breake all edges

REV	DESCRIPTION	DATE	APPROVED
A	Made	25-10-2012	KC

REVISION HISTORY

This document is strictly confidential and must on no account be copied or disclosed to any third person.
HEDENSTED GRUPPEN A/S

Hedensted Gruppen

Scale: 1 : 12	Ikke angivet tolerancer iht./ Not specificed tolerance according to: DS/ISO 2768-m		Sheet size: A3
	Overfl. beskaffenhed/Surface properties: No		Sheet: 1 /2
Part No.: M100271	Material:		
Description: 160M Rear assembly 3			
Description:			

PARTS LIST			
ITEM	QTY	PART NUMBER	DESCRIPTION
1	8	19905000	Self-locking nut M5 Inox A2
2	2	250114	Hinge for container
3	2	250140	Shaft for hinge
4	8	81805000	Washer M5 Inox A2
5	4	89404036	Cotter pin Ø4x36 FZB
6	1	M100027	Hatch for feed container
7	1	M100273	Container for feeder 160M
8	1	M10135	Gasket for hatch

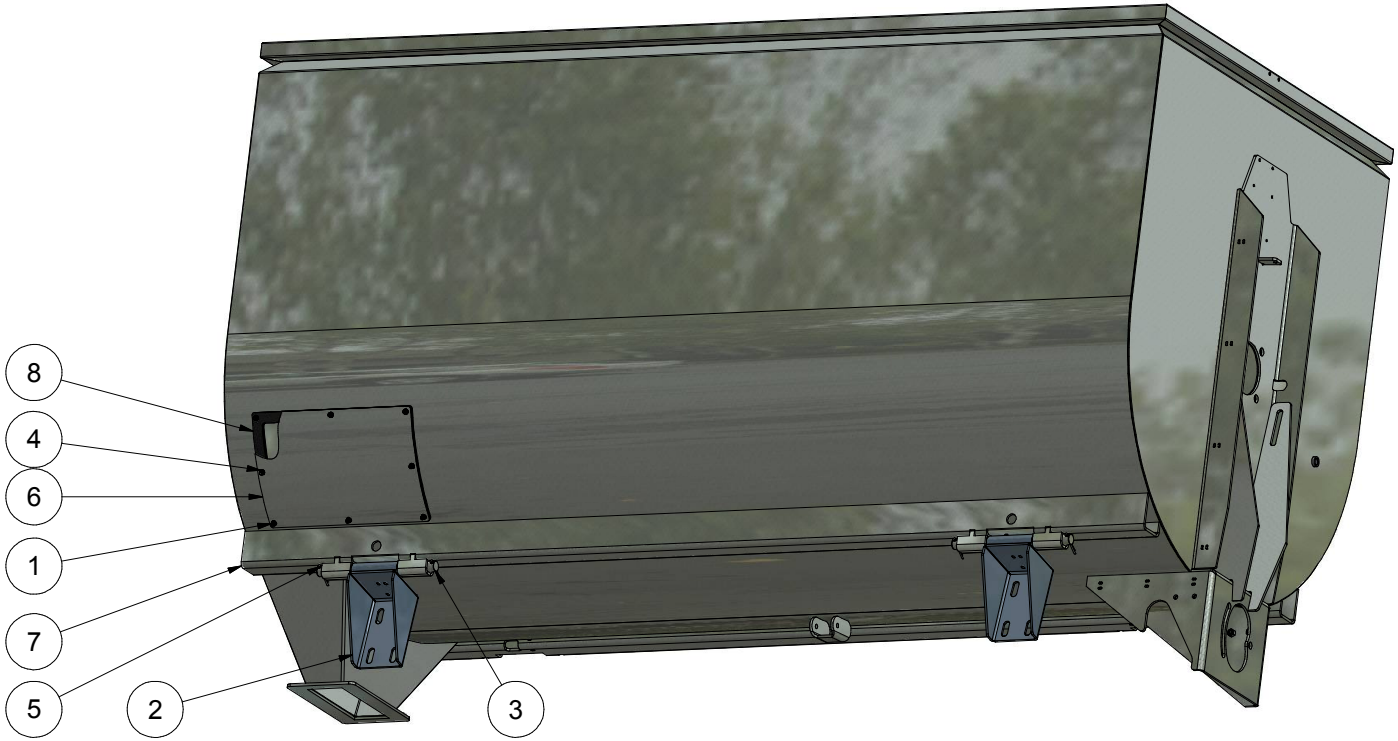

Alle kanter reifes
Breake all edges

REV	DESCRIPTION	DATE	APPROVED
A	Made	25-10-2012	KC

REVISION HISTORY

This document is strictly confidential and must on no account be copied or made available to third parties.
HEDENSTED GRUPPEN A/S

Hedensted Gruppen

Scale: 1 : 10	Ikke angivet tolerancer iht./ Not specificed tolerance according to: DS/ISO 2768-m	Sheet size: A3
	Overfl. beskaffenhed/Surface properties: No	Sheet: 1 /1
Part No.: M100272	Material:	
Description: Container 160M assembly 1		
Description:		

PARTS LIST			
ITEM	QTY	PART NUMBER	DESCRIPTION
1	1	11412035	Hexagon bolt M12x35 FZB
2	10	12908025	Hexagon bolt m8 x 25 - A2
3	4	12912035	Hexagon bolt M12x35 A2
4	10	17908000	Self-locking nut M8 FZB
5	1	197044	Key 10x8x30
6	1	250088	Bushing for worm
7	1	250172	Hub assembly 2 for worm
8	1	426384	Grease fitting M10x1 straight
9	1	M100036	Sprocket Z-32 1inch Ø35
10	1	M100044	Hub complete for mixer
11	1	M100095	Thread pipe
12	1	M100096	Washer for sprocket
13	1	M100271	160M Rear assembly 3
14	1	M100275	Mixer for 160M

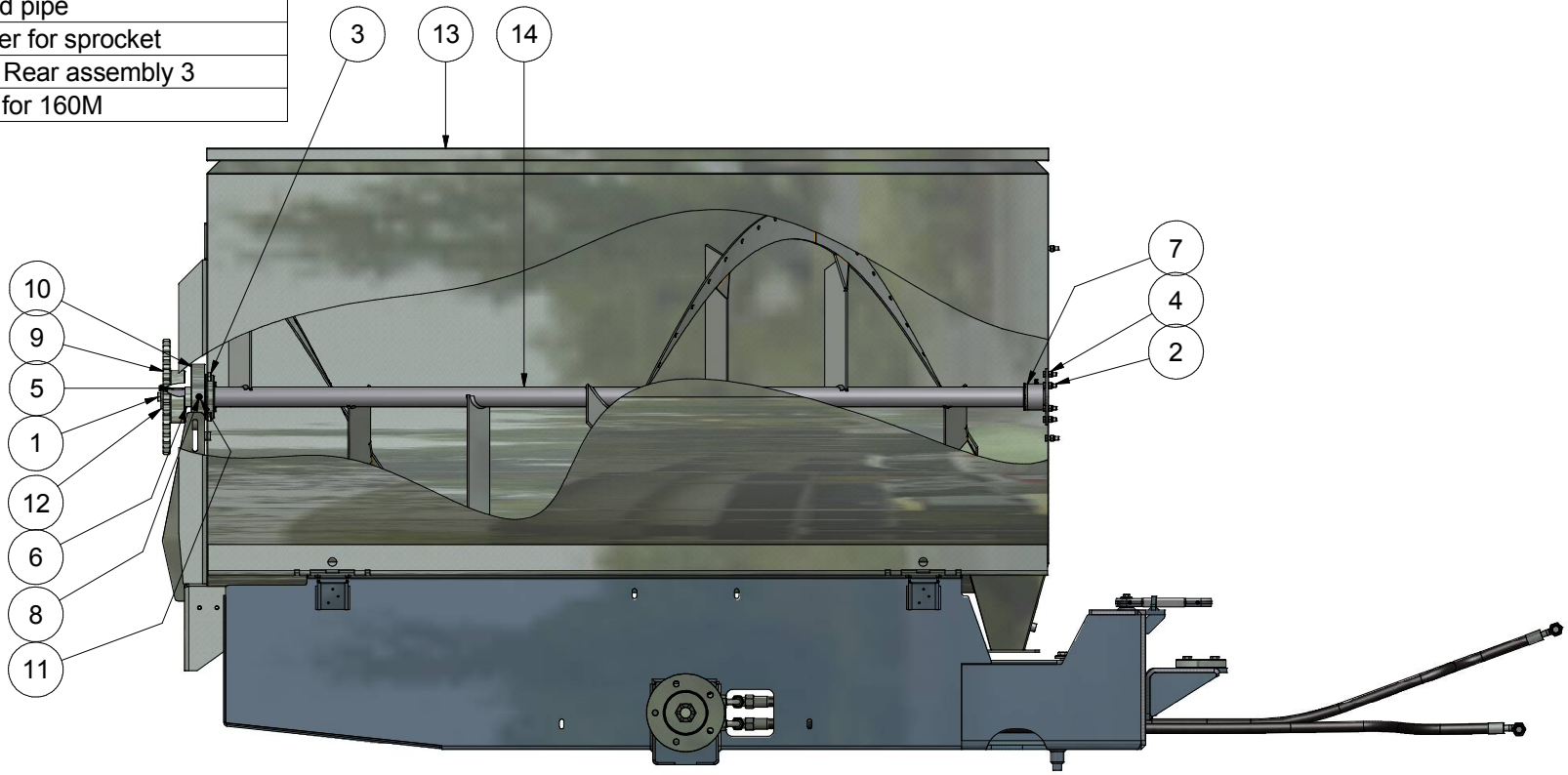

Alle kanter reifes
Breake all edges

REV	DESCRIPTION	DATE	APPROVED
A	Made	25-10-2012	KC

REVISION HISTORY

This document is strictly confidential and must on no account be reproduced or made available to third parties.
HEDENSTED GRUPPEN A/S

Hedensted Gruppen

Scale: 1 : 12	Ikke angivet tolerancer iht./ Not specificed tolerance according to: DS/ISO 2768-m	Sheet size: A3
	Overfl. beskaffenhed/Surface properties: No	Sheet: 1 /1
Part No.: M100274	Material:	
Description: 160M Rear assembly 4		
Description:		

PARTS LIST			
ITEM	QTY	PART NUMBER	DESCRIPTION
1	2	11406050	Hexagon bolt M6x50 FZB
2	6	12606000	Nut M6 A2
3	4	12906030	Hexagon bolt m6x30 A2
4	1	425934	Wire emergency stop switch
5	6	430465	Wheel for wire emergency stop
6	1	600455	Cabel gland M20 Ø5-12
7	6	82106000	Washer M6 FZB
8	6	M100038	Bushing for wire
9	5,5 m	M100039	Inox wire 7x7 Ø3
10	1	M100274	160M Rear assembly 4

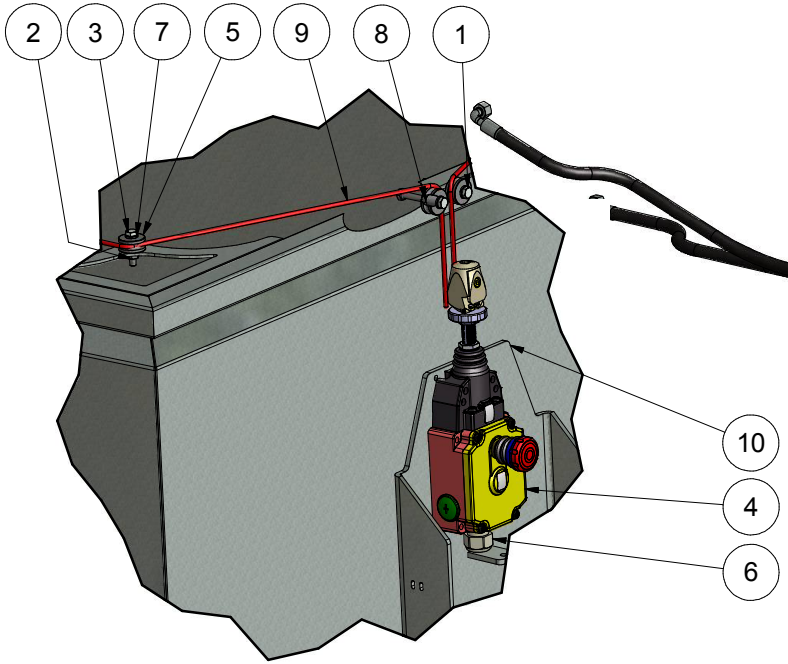

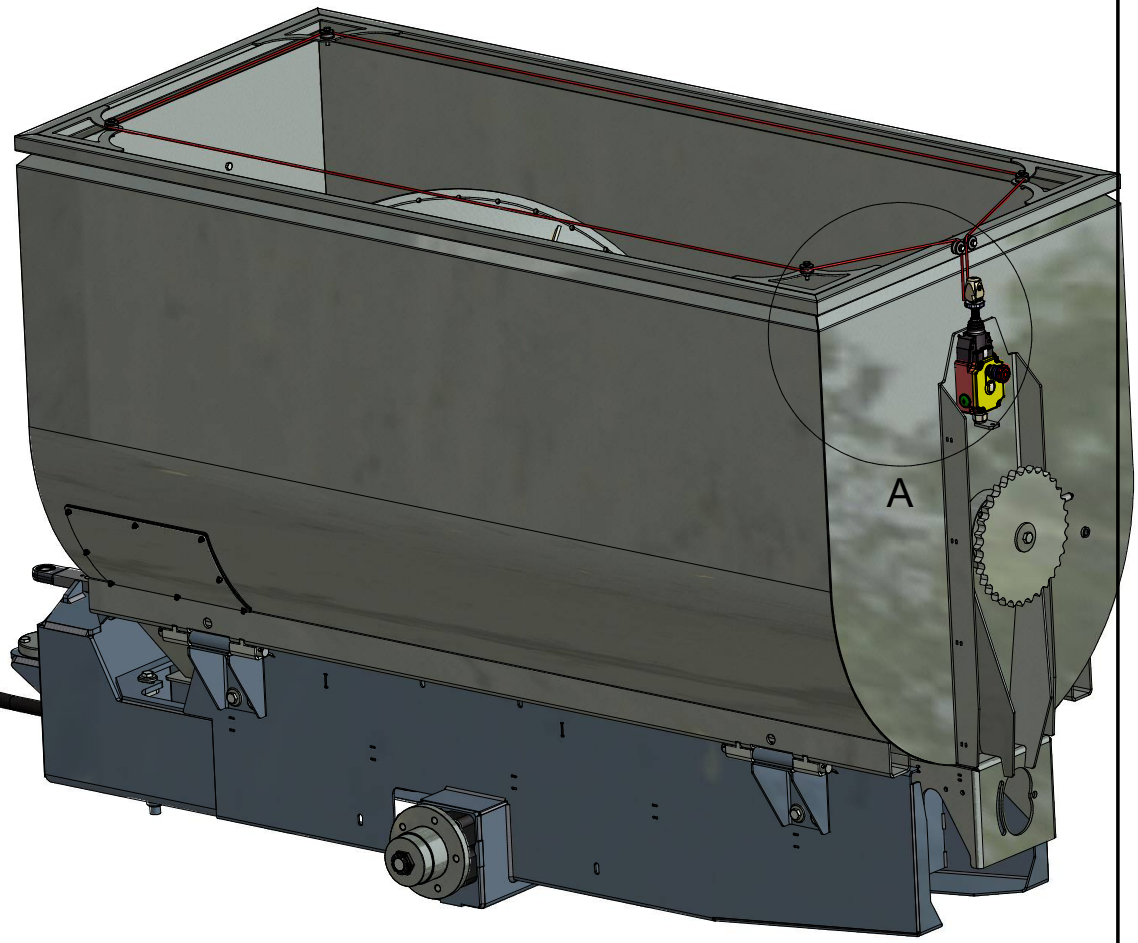

Alle kanter reifes
Breake all edges

REV	DESCRIPTION	DATE	APPROVED
A	Made	26-10-2012	KC
B	Part List Updated	19-06-2013	KC

REVISION HISTORY

This document is strictly confidential and must on no account be copied or made available to third parties.
HEDENSTED GRUPPEN A/S

Hedensted Gruppen

Scale: 1 : 10	Ikke angivet tolerancer iht./ Not specificed tolerance according to: DS/ISO 2768-m	Sheet size: A3
	Overfl. beskaffenhed/Surface properties: No	Sheet: 1 /1
Part No.: M100276	Material:	
Description: 160M Rear assembly 5		
Description:		

PARTS LIST			
ITEM	QTY	PART NUMBER	DESCRIPTION
1	1	10506010	Stop screw 6x10 mm black
2	1	11408016	Hexagon bolt M8x16 FZB
3	1	11412080	Hexagon bolt 12x80 FZB
4	1	1512000	Nut M12 FZB
5	1,700 m	190580	Rolerchain 16B L=1625,6
6	1	190582	Chain connection link 16B 25,4
7	1	25416	Container sheet 11
8	1	477117	Male stud 15L 3/8"
9	2	477120	Male stud Ø15-L 1/2" DM
10	1	477229	Male test nipple 3/8" BSP
11	1	4809335	Washer type SRKB ø9x35x3
12	3	M100099	Spacer for sprocket
13	1	M100276	160M Rear assembly 5
14	1	M100352	Sprocket Z8 16B
15	1	M100412	Half chain link 16B
16	1	M100413	Hose Feed pump t valve mix
17	1	M100414	Radiator to valve mix
18	1	M100415	Hose Orbitrol to valve mix
19	1	M100519	Motor assembly for mixer

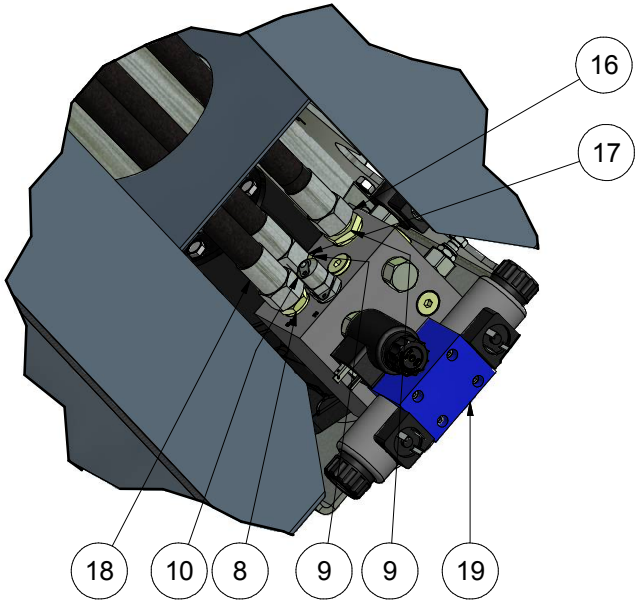

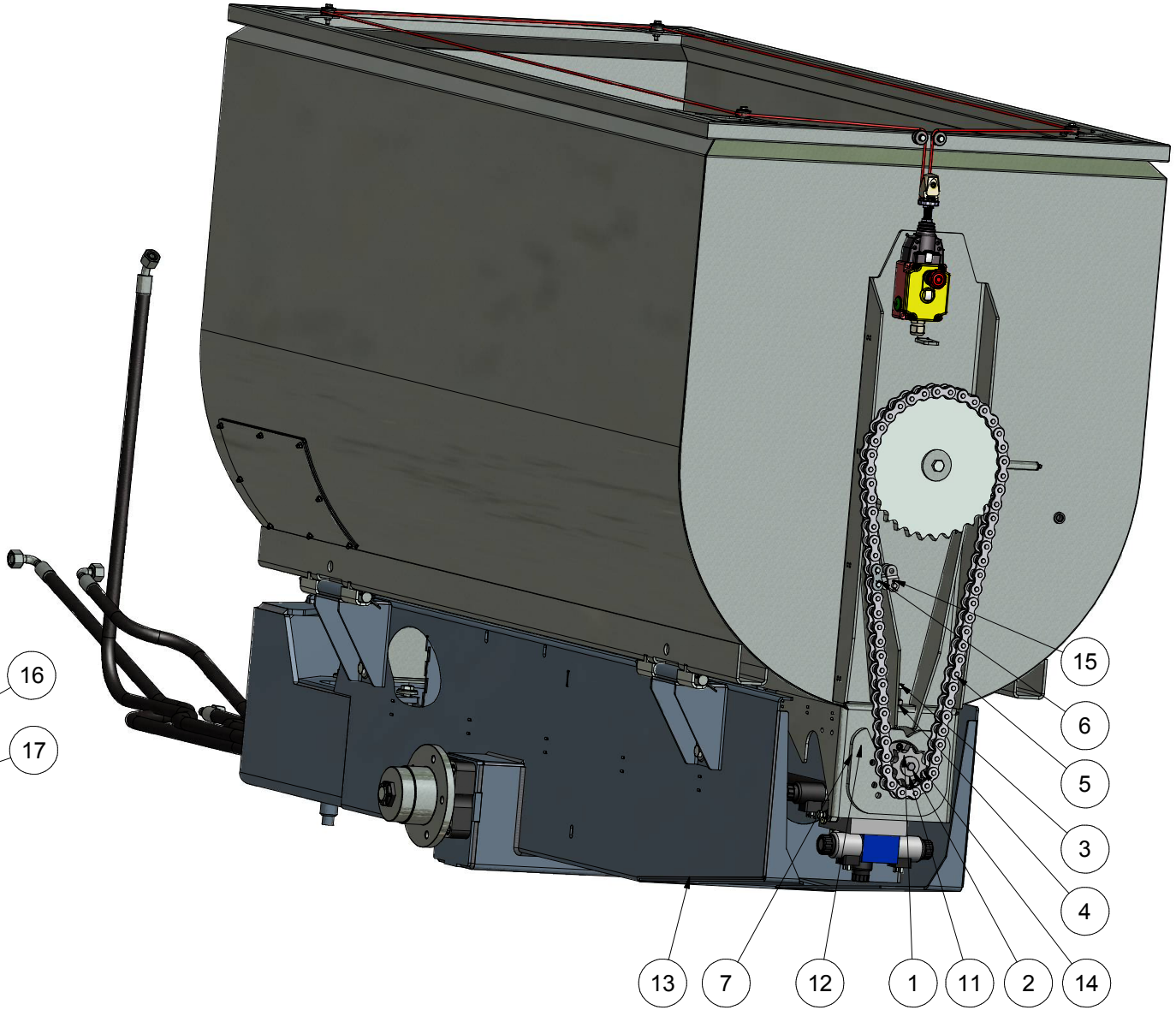

Alle kanter reifes
Breake all edges

REV	DESCRIPTION	DATE	APPROVED
A	Made	26-10-2012	KC
B	Part list updated	20-06-2013	KC
C	Part list updated	26-05-2015	KC

REVISION HISTORY

This document is strictly confidential and must on no terms be reproduced, copied or shared with others.
HEDENSTED GRUPPEN A/S

Hedensted Gruppen

Scale: 1 : 8	Ikke angivet tolerancer iht./ Not specificed tolerance according to: DS/ISO 2768-m	Sheet size: A3
	Overfl. beskaffenhed/Surface properties: No	Sheet: 1 /2
Part No.: M100277	Material:	
Description: 160M Rear assembly 6		
Description:		

PARTS LIST			
ITEM	QTY	PART NUMBER	DESCRIPTION
1	7	11408016	Hexagon bolt M8x16 FZB
2	2	250082	Brace for chain cover
4	4	82108000	Washer M8 FZB
5	3	826-08-000	Washer ø8x24x2 DIN9021A
6	1	M100023	Chain cover
7	1	M100277	160M Rear assembly 6

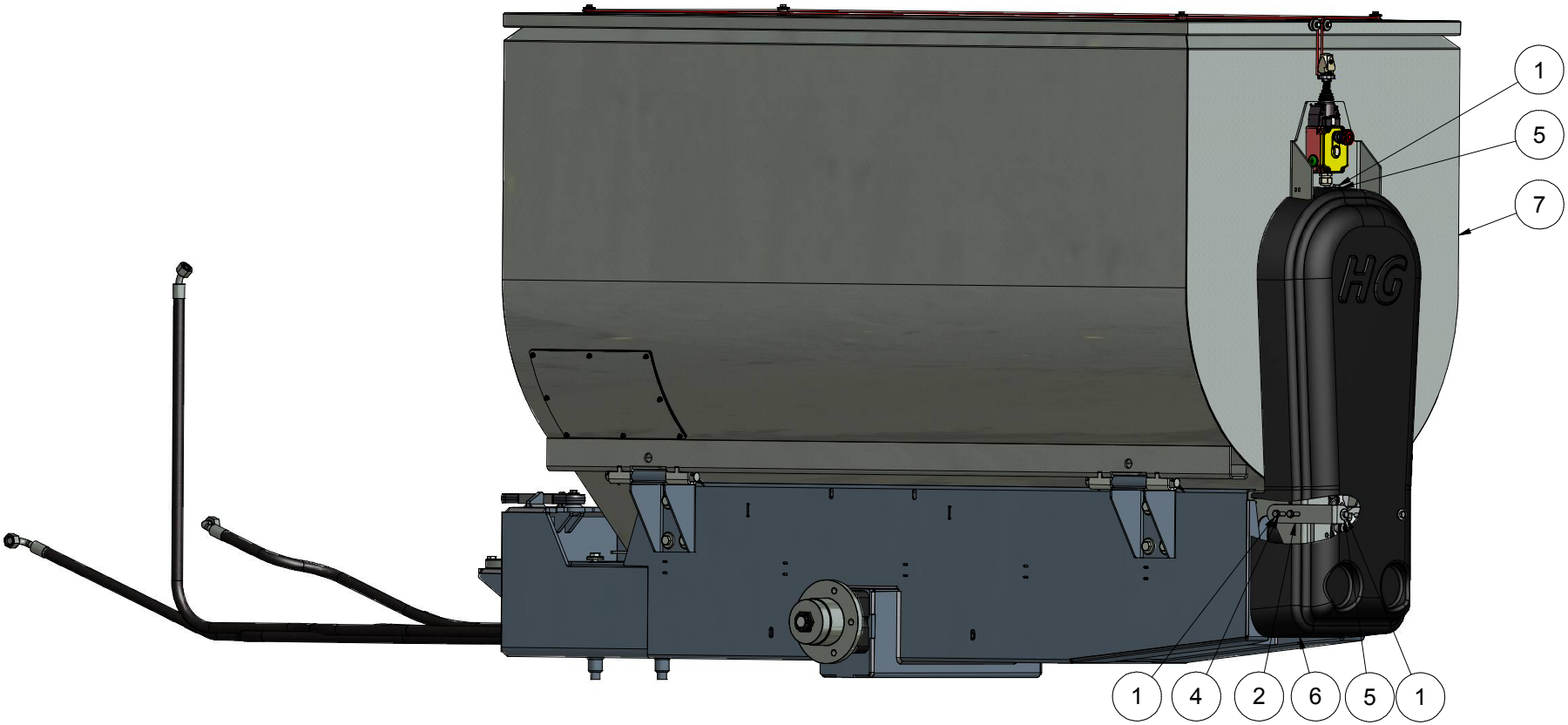

Alle kanter reifes
Breake all edges

REV	DESCRIPTION	DATE	APPROVED
A	Made	26-10-2012	KC

REVISION HISTORY

This document is strictly confidential and must on no account be reproduced or made available to third parties.
HEDENSTED GRUPPEN A/S

Hedensted Gruppen

Scale: 1 : 10	Ikke angivet tolerancer iht./ Not specificed tolerance according to: DS/ISO 2768-m	Sheet size: A3
	Overfl. beskaffenhed/Surface properties: No	Sheet: 1 /1
Part No.: M100278	Material:	
Description: 160M Rear assembly 7		
Description:		

PARTS LIST			
ITEM	QTY	PART NUMBER	DESCRIPTION
1	10	21014025	Hexagon bolt 14x1,5x25 FZB
2	10	4814335	Washer Type SRKB ø14x35x3
3	2	M100265	Tractor wheel 23x8,5
4	1	M100278	160M Rear assembly 7

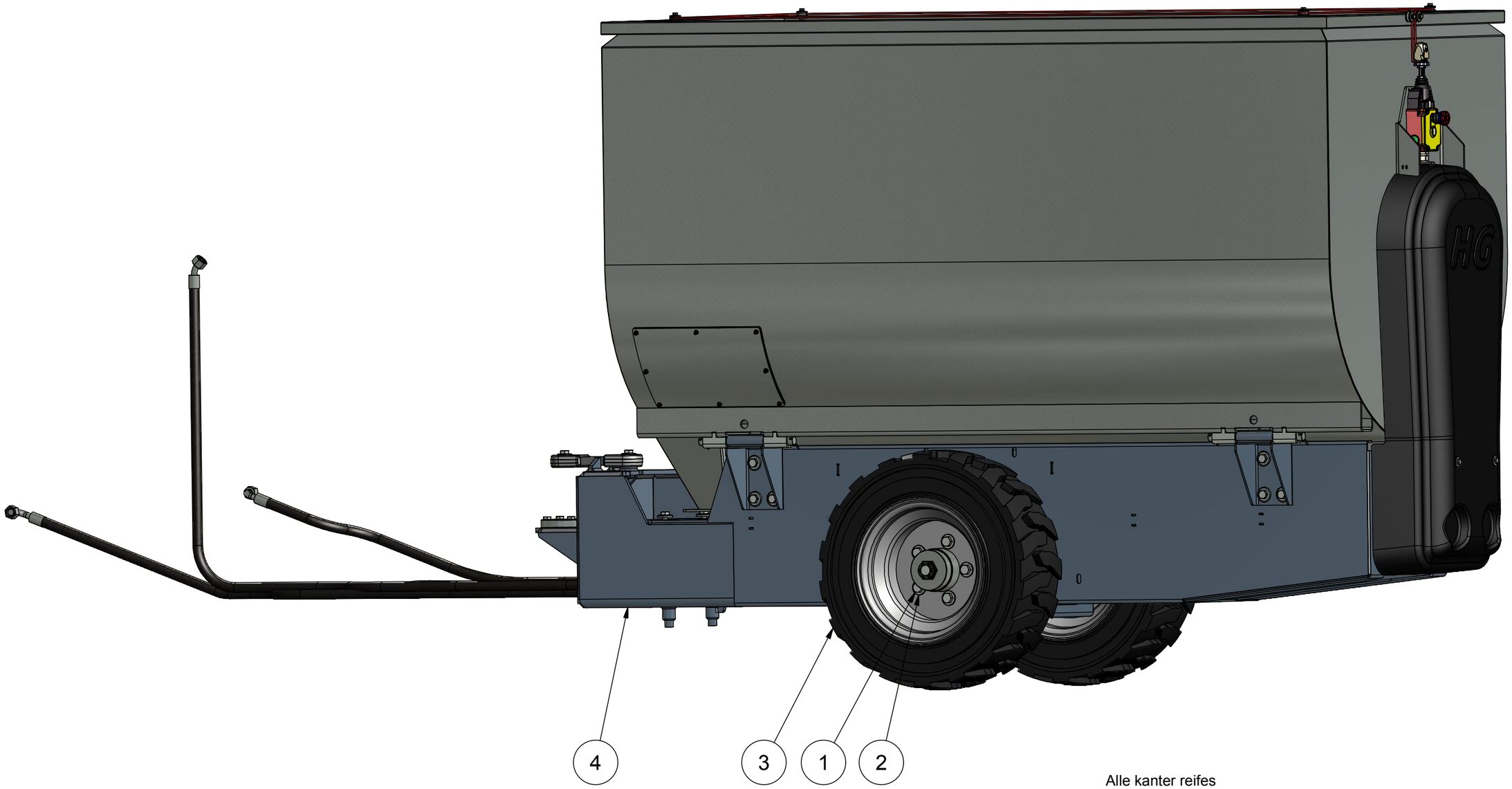

Alle kanter reifes
Breake all edges

A	Made	26-10-2012	KC
REV	DESCRIPTION	DATE	APPROVED
REVISION HISTORY			

This document is strictly confidential and must on no account be copied or disclosed to any third person.
HEDENSTED GRUPPEN A/S

Hedensted Gruppen

Scale: 1 : 10	Ikke angivet tolerancer iht./ Not specificed tolerance according to: DS/ISO 2768-m		Sheet size: A3
	Overfl. beskaffenhed/Surface properties: No		Sheet: 1 /2
Part No.: M100279	Material:		
Description: 160M Rear assembly 8			
Description:			

PARTS LIST			
ITEM	QTY	PART NUMBER	DESCRIPTION
1	6	20405010	Hexagon countersunk M5x10 FZB
2	2	425944	Latch clamp 703HL
3	1	M100279	160M Rear assembly 8
4	2	M100281	HG Feeder 160M

Alle kanter reifes
Breake all edges

A	Made	26-10-2012	KC		
REV	DESCRIPTION	DATE	APPROVED		
REVISION HISTORY					

This document is strictly confidential and must on no account be reproduced or made available to third parties.
HEDENSTED GRUPPEN A/S

Hedensted Gruppen

Scale: 1 : 10	Ikke angivet tolerancer iht./ Not specificed tolerance according to: DS/ISO 2768-m	Sheet size: A3
	Overfl. beskaffenhed/Surface properties: No	Sheet: 1 /1
Part No.: M100280	Material:	
Description: 160M Container unit		
Description:		

Accessories

HG FEEDER 100/125/160 M

HEDENSTED GRUPPEN

PARTS LIST			
ITEM	QTY	PART NUMBER	DESCRIPTION
1	1	11406025	Hexagon bolt M6x25 FZB
2	1	11406030	Hexagon bolt M6x30 FZB
3	1	11408016	Hexagon bolt M8x16 FZB
4	1	11408025	Hexagon bolt M8x25 FZB
5	1	11408055	Hexagon bolt M8x55 FZB
6	1	11410050	Hexagon bolt M10x50 FZB
7	5	11412035	Hexagon bolt M12x35 FZB
8	1	175800	Siraflex spring balance, 1-2kg
9	1	17906000	Self-locking nut M6 FZB
10	10	17908000	Self-locking nut M8 FZB
11	2	430465	Wheel for wire emergency stop
12	3	479080	Ganter star handle
13	4	64408020	Cup head square neck bolt M8x20 FZB
14	1	806001	Pipe Clamps 60mm
15	5	81212000	Washer ø13x37x3 FZB
16	1	82106000	Washer M6 FZB
17	7	82108000	Washer M8 FZB
18	1	82110000	Washer M10 FZB
19	2	82608000	Washer ø8x24x2 DIN9021A
20	1	M100774	Balancer brace 1
21	1	M100779	Handle for feeding hose
22	1	M100780	Handle part 2
23	1	M100781	Brace 1 for rest
24	1	M100783	Brace 2 for rest
25	1	M100784	Brace 3 for rest
26	1	M100785	Brace 4 for rest
27	2	M100786	Bushing for wheel
28	1	M100790	Balancer brace 2
29	2	M100791	Pipe clamps 28mm
30	1	M100805	Cushion for rest
31	1	M10843	Balancer part 2
32	1	M10846	Balancer part 3
33	1	M10862	Balancer part 4
34	1	M10864	Balancer part 6
35	1	M10867	Balancer part 9
36	1	M10868	Balancer part 10
37	1	M10869	Stop plate
38	1	M200204	Lobe knobs Ø40 M8x16
39	1	M200206	Lobe knobs Ø40 M8x40

Alle kanter reifes
Breake all edges

REV	DESCRIPTION	DATE	APPROVED
A	Made	06-10-2014	KC

REVISION HISTORY

This document is strictly confidential and must on no account be copied or disclosed to any third person.
HEDENSTED GRUPPEN A/S

Hedensted Gruppen

Scale:

Ikke angivet tolerancer iht./ Not specificed tolerance according to: DS/ISO 2768-m

Sheet size: A3

Overfl. beskaffenhed/Surface properties: No

Sheet: 1 /1

Part No.: M100795

Material:

Description: Balancer for feeding hose

Description:

PARTS LIST			
ITEM	QTY	PART NUMBER	DESCRIPTION
1	1	38000	Brace for feeding hose feeder
2	1	47057	Half socket 2 inch black
3	1	M10887	Feeding pipe

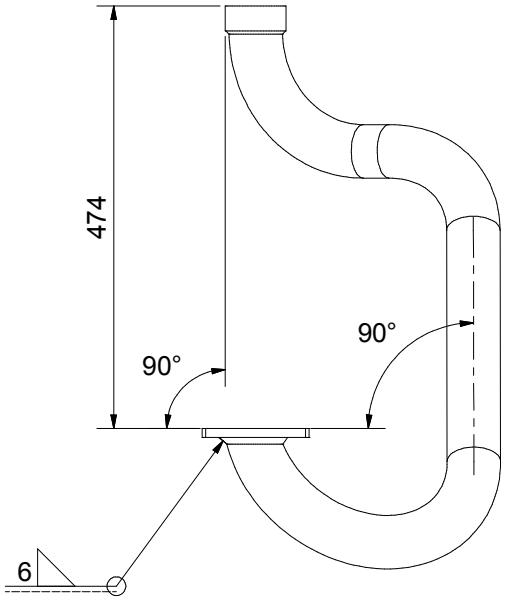

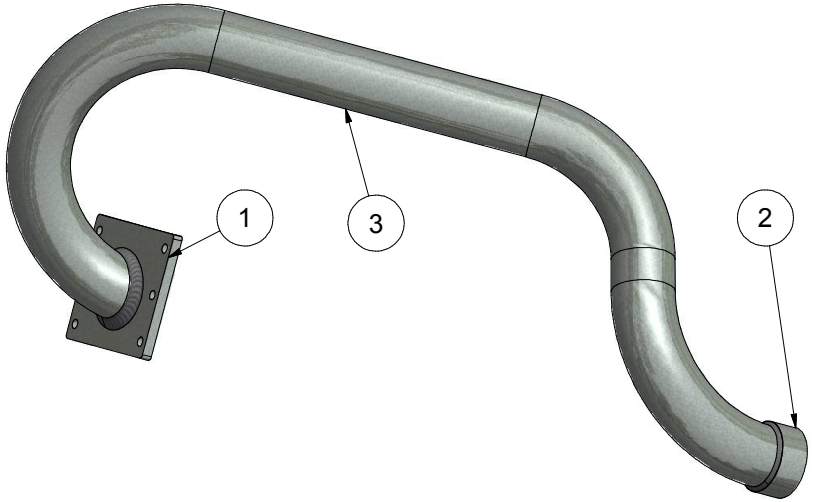

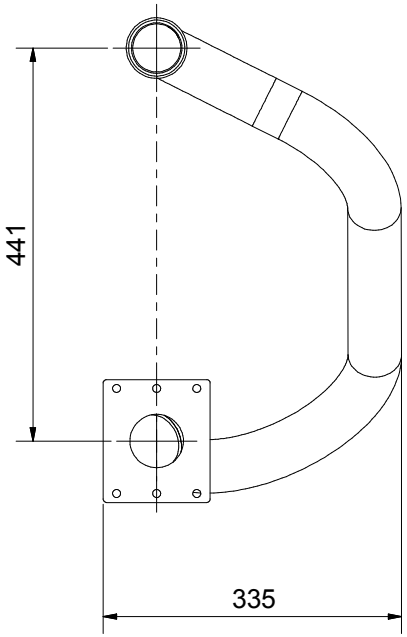

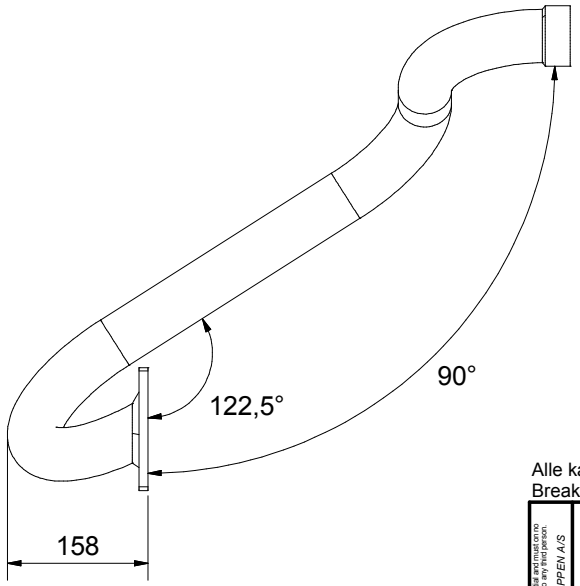

Alle kanter reifes
Breake all edges

REV	DESCRIPTION	DATE	APPROVED
A	Made	02-10-2014	KC
B	Part List Updated	29-10-2014	KC

REVISION HISTORY

This document is strictly confidential and must on no ground be reproduced, copied or used for other purposes.
HEDENSTED GRUPPEN A/S

Hedensted Gruppen

Scale:	Ikke angivet tolerancer iht./ Not specificed tolerance according to: DS/ISO 2768-m	Sheet size: A3
	Overfl. beskaffenhed/Surface properties: Zinc chromate	Sheet: 1 /1
Part No.: M100796	Material: Welded Steel Mild	
Description: Feeding pipe		
Description: For XL pump 100/125/160		

PARTS LIST			
ITEM	QTY	PART NUMBER	DESCRIPTION
1	4	10206016	Bolt. unbraco cyl 6x16 FZB
2	3	10208035	Bolt Unbrako cyl 8x35 FZB
3	2	10212030	Bolt.unbraco cyl 12x30 FZB
4	2	10508008	Stop screw M8x8 black
5	8	20408020	Hexagon countersunk M8x20 FZB
6	1	413033	Gasket feedingpump Nitril. 5mm
7	1	413034	Sponge pumpegasket Flex/Feeder
8	1	423644	Clutch housing
9	1	423660	Feed Pump, Feeder
10	1	423688	Clutch part w timing gear
11	1	426130	Frame for pump
12	2	477120	Male stud Ø15-L 1/2" DM
13	1	478031	Coupling hub ø30H7, Rotex28
14	1	478032	Element 92 Shore A, Rotex28
15	1	M100078	Hose clamp ø65mm
16	1	M100129	Feeding pipe for STD pump
17	1	M100522	Motor assembly for pump

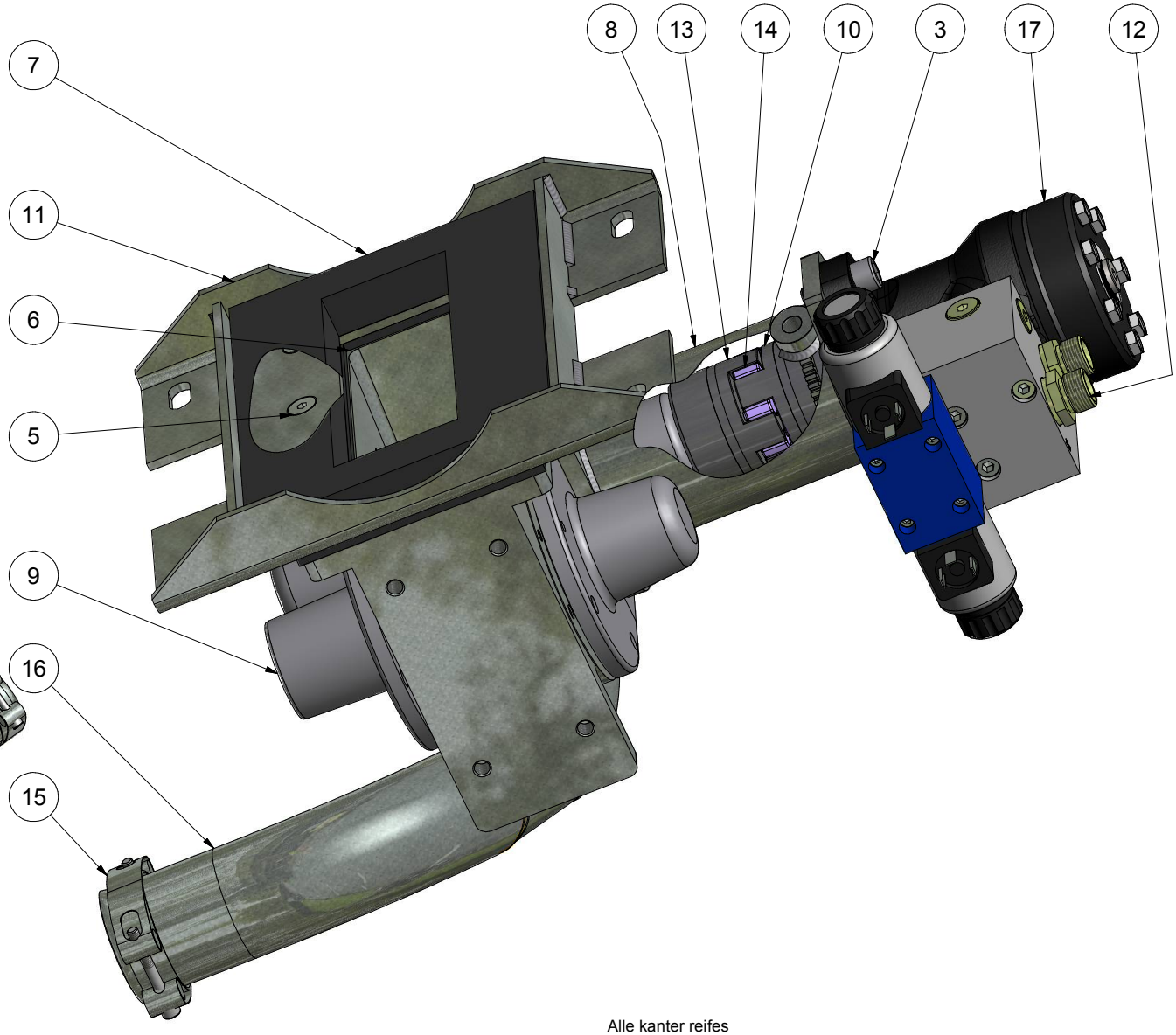

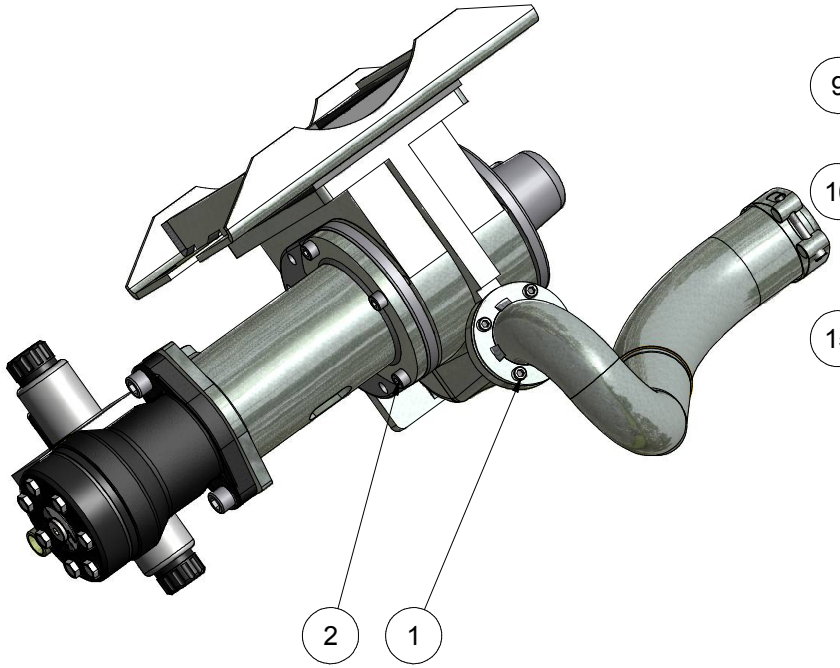

Alle kanter reifes
Breake all edges

REV	DESCRIPTION	DATE	APPROVED
A	Made	30-01-2012	KC
B	Part list updated	18-08-2014	KC
C	Part list updated	26-05-2015	KC

REVISION HISTORY

This document is strictly confidential and must on no account be reproduced or copied to third parties.
HEDENSTED GRUPPEN A/S

Hedensted Gruppen

Scale: 1 : 2,5	Ikke angivet tolerancer iht./ Not specificed tolerance according to: DS/ISO 2768-m	Sheet size: A3
	Overfl. beskaffenhed/Surface properties: No	Sheet: 1 /1
Part No.: 250201	Material:	
Description: Feedingpump HG standard model		
Description:		

PARTS LIST			
ITEM	QTY	PART NUMBER	DESCRIPTION
1	3	10208025	Bolt Unbrako Cyl. 8x25 FZB
2	2	10212025	Bolt.unbraco cyl 12x25 FZB
3	2	10508008	Stop screw M8x8 black
4	6	11408020	Hexagon bolt M8x20 FZB
5	6	20408020	Hexagon countersunk M8x20 FZB
6	1	250083	Brace for feeding hose
7	1	400012	HG Feeding pump universal
8	1	400025	Pump frame for F900-1200 new
9	1	400035	Rubbergasket for frame 5mm
10	1	400110	Clutch housing for feeder
11	1	413034	Sponge pumpegasket Flex/Feeder
12	2	477120	Male stud Ø15-L 1/2" DM
13	1	478030	Hub 1a ø25H7xDS n+s f/Rotex 28
14	1	478031	Coupling hub ø30H7, Rotex28
15	1	478032	Element 92 Shore A, Rotex28
16	1	M100078	Hose clamp ø65mm
17	1	M100522	Motor assembly for pump

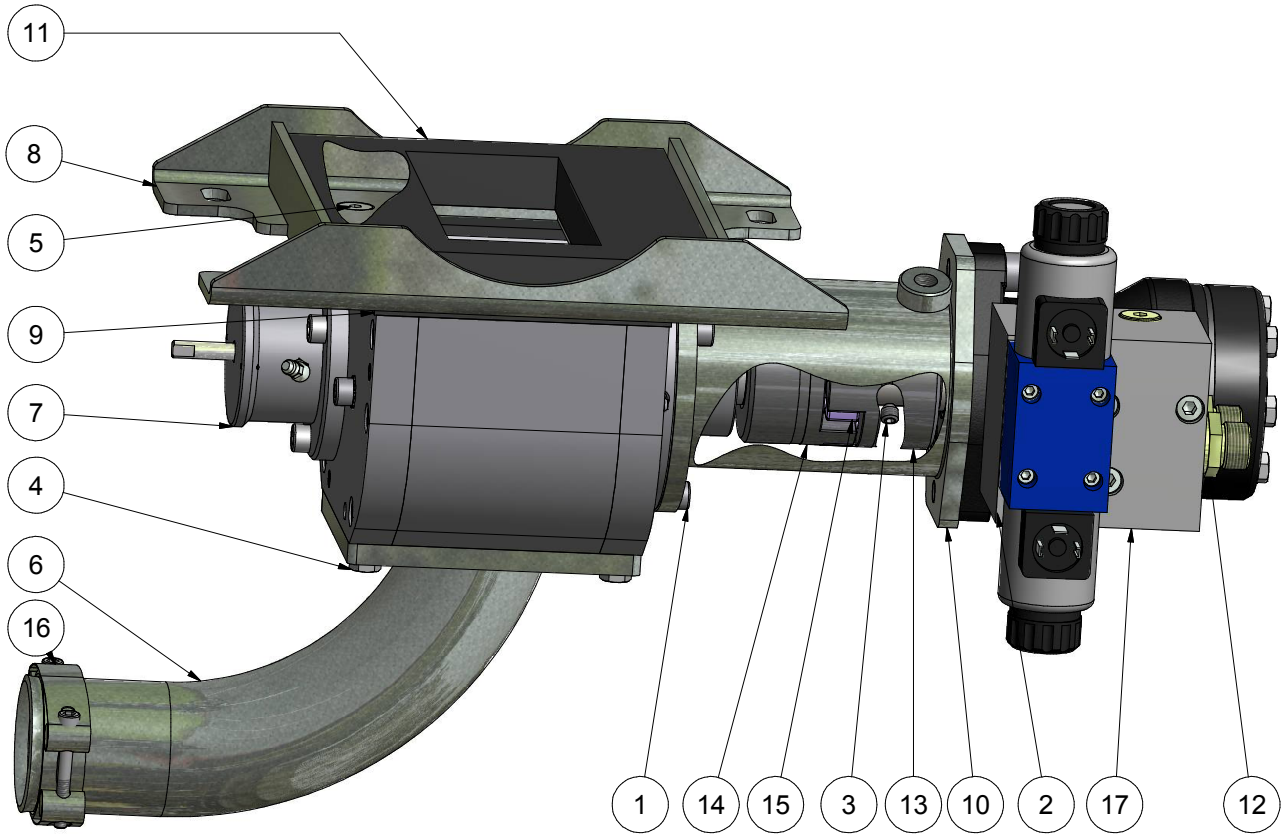

Alle kanter reifes
Breake all edges

REV	DESCRIPTION	DATE	APPROVED
A	Made	30-01-2012	KC
B	Part List updated	26-05-2015	KC

REVISION HISTORY

This document is strictly confidential and must on no ground be reproduced or copied to third parties.
HEDENSTED GRUPPEN A/S

Hedensted Gruppen

Scale: 1 : 2,5	Ikke angivet tolerancer iht./ Not specificed tolerance according to: DS/ISO 2768-m	Sheet size: A3
	Overfl. beskaffenhed/Surface properties: No	Sheet: 1 /2
Part No.: 250203	Material:	
Description: Feedingpump HG XL hardnedsteel		
Description:		

PARTS LIST			
ITEM	QTY	PART NUMBER	DESCRIPTION
1	2	250147	Rear light
2	2	250148	Front light
3	1	477981	Aktuator for 477980 and 477982
4	1	477982	Rocker switch ON-ON
5	4	99852226	Flat crimp with lock
6	2	99855008	Multi plug female

Alle kanter reifes
Breake all edges

REV	DESCRIPTION	DATE	APPROVED
A	Made	02-07-2013	KC

REVISION HISTORY

This document is strictly confidential and must on no account be reproduced or made available to third parties.
HEDENSTED GRUPPEN A/S

Hedensted Gruppen

Scale: 1 : 1	Ikke angivet tolerancer iht./ Not specificed tolerance according to: DS/ISO 2768-m	Sheet size: A3
	Overfl. beskaffenhed/Surface properties: No	Sheet: 1 /1
Part No.: 250205	Material:	
Description: Light kit front/rear		
Description: Feeder		

PARTS LIST			
ITEM	QTY	PART NUMBER	DESCRIPTION
1	4	10205045	Bolt Unbraco cyl 5x45 FZB
2	4	10208075	Bolt Unbrako cyl 8x75 FZB
3	1	423709	Hydraulic motor OMR 100 Ø25mm
4	1	430114	Magnetic valvel 4-3P-T HD3
5	2	473813	O-ring ø21x2,5 NBR 70
6	1	M100521	Valve block for pump

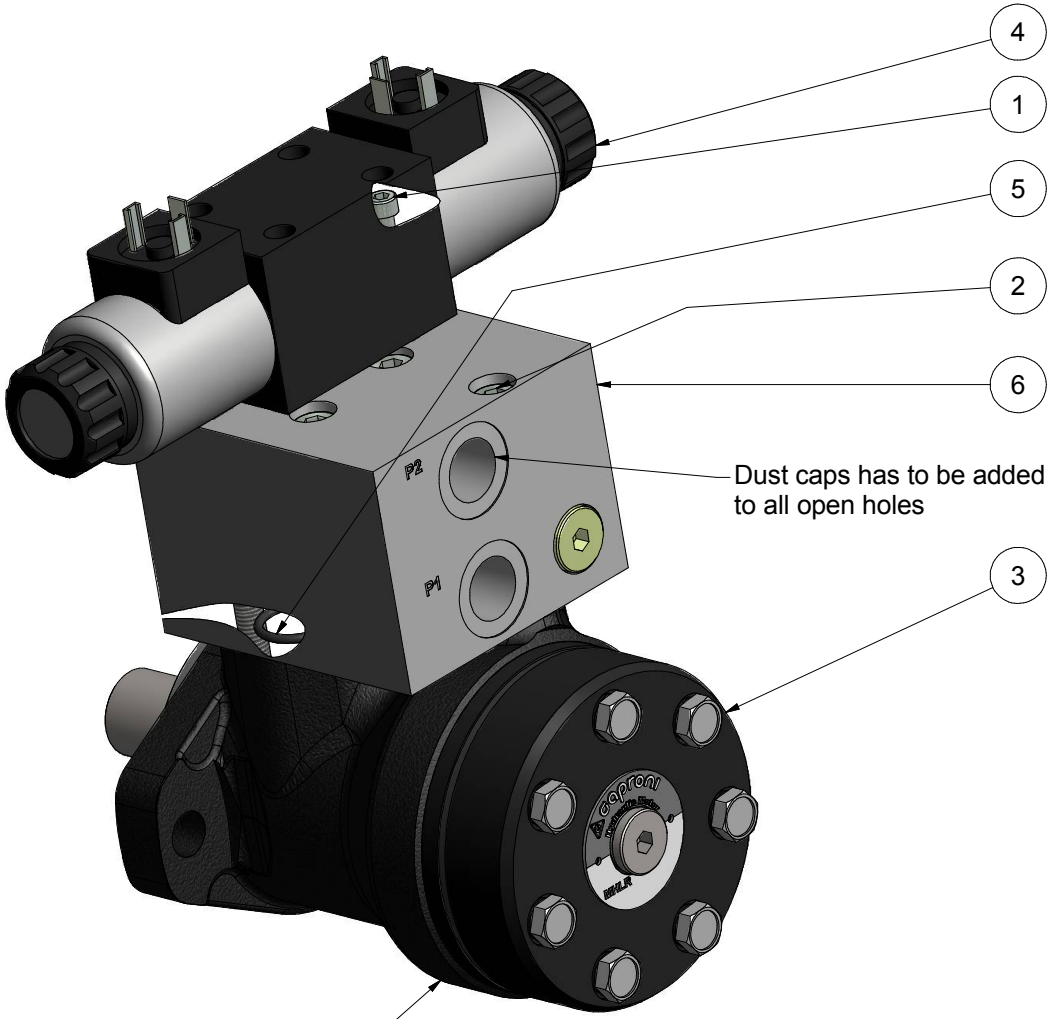

Alle kanter reifes
Breake all edges

REV	DESCRIPTION	DATE	APPROVED
A	Made	29-01-2014	KC

REVISION HISTORY

This document is strictly confidential and it must on no reason be reproduced or copied to third parties.
HEDENSTED GRUPPEN A/S

Hedensted Gruppen

Scale: 1 : 1,5	Ikke angivet tolerancer iht./ Not specificed tolerance according to: DS/ISO 2768-m	Sheet size: A3
	Overfl. beskaffenhed/Surface properties: No	Sheet: 1 /1
Part No.: M100522	Material:	
Description: Motor assembly for pump		
Description: F100/125/160		

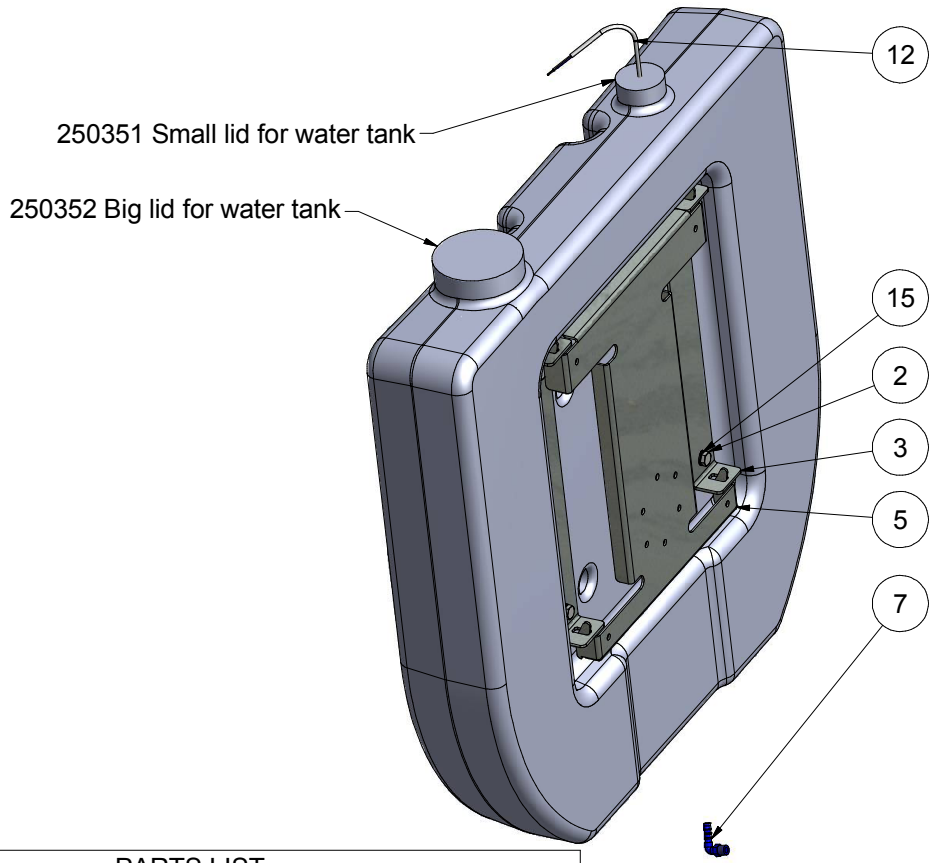

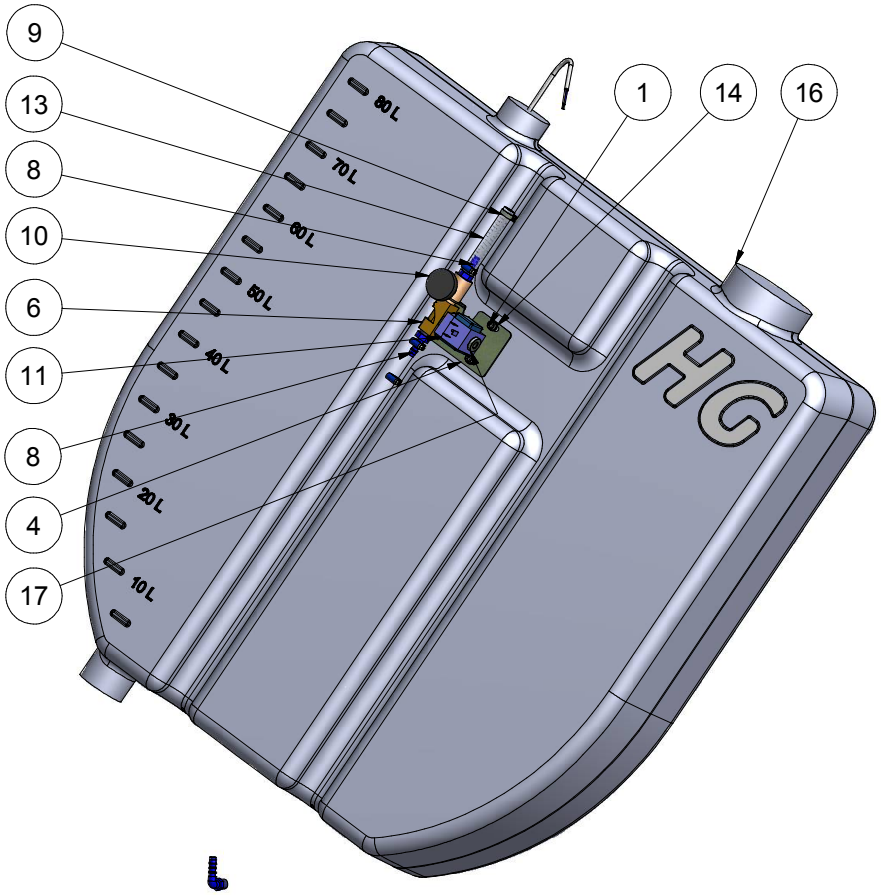

PARTS LIST			
ITEM	QTY	PART NUMBER	DESCRIPTION
1	2	10206010	Bolt unbrako cyl 6x10 FZB
2	4	11410020	Hexagon bolt M10x20 FZB
3	2	250079	Brace for water tank
4	1	250085	Brace for water valve
5	1	250123	Joint for water tank
6	1	250167	Solenoid valve EV210B
7	1	423903	Elbow hose connector Ø10x1/4"
8	2	425845	Hose connector Ø10x3-8
9	4	474006	Hose clamp 11-16
10	1	477525	Needle valve 3-8 M-N
11	1	477540	Valvecoil danfoss
12	1	477558	Submersion pump 12V
13	2,500 m	477570	Alfasteel hose Ø10
14	2	82106000	Washer M6 FZB
15	4	82110000	Washer M10 FZB
16	1	M100028	Water tank
17	1	M100245	Nut for valve coil

REVISION HISTORY			
REV	DESCRIPTION	DATE	APPROVED
A	Made	09-12-2011	KC
B	Part List updated	26-02-2015	KC

Alle kanter reifes
Breake all edges

This document is strictly confidential and must on no reason be reproduced or shared with third parties.
HEDENSTED GRUPPEN A/S

Hedensted Gruppen

Scale: 1 : 7	Ikke angivet tolerancer iht./ Not specificed tolerance according to: DS/ISO 2768-m	Sheet size: A3
	Overfl. beskaffenhed/Surface properties: No	Sheet: 1 /1
Part No.: M100042	Material:	
Description: Water dosing		
Description: Feeder 900-1200-1600		

PARTS LIST			
ITEM	QTY	PART NUMBER	DESCRIPTION
1	2	17905000	Self-locking nut M5 FZB
2	1	250209	Seat cushion with heat
3	2	76005012	Bolt buttonhead 5x12 FZB
4	2	99851040	Cable shoe red flat
5	1,0 m	99891101	Wire Black 1,5mm2
6	1,0 m	99891102	Wire Red 1,5mm2
7	1	M100438	Rocker switch
8	1	M100439	Brace for switch

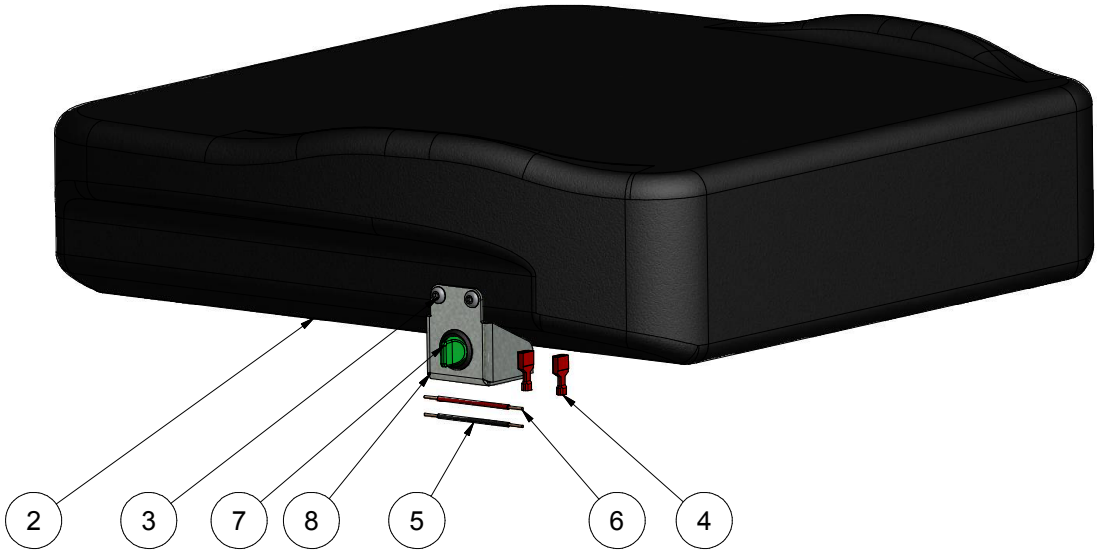

Alle kanter reifes
Breake all edges

REV	DESCRIPTION	DATE	APPROVED
A	Made	18-09-2013	KC

REVISION HISTORY

This document is strictly confidential and must on no ground be reproduced or shared with third parties.
HEDENSTED GRUPPEN A/S

Hedensted Gruppen

Scale: 1 : 3	Ikke angivet tolerancer iht./ Not specificed tolerance according to: DS/ISO 2768-m	Sheet size: A3
	Overfl. beskaffenhed/Surface properties: No	Sheet: 1 /1
Part No.: 250211	Material:	
Description: Heat for air seat		
Description: Complete with contact		

PARTS LIST			
ITEM	QTY	PART NUMBER	DESCRIPTION
1	1	M100127	Seat with Air suspension
2	2	99855008	Multi plug female
3	4	99852226	Flat crimp with lock

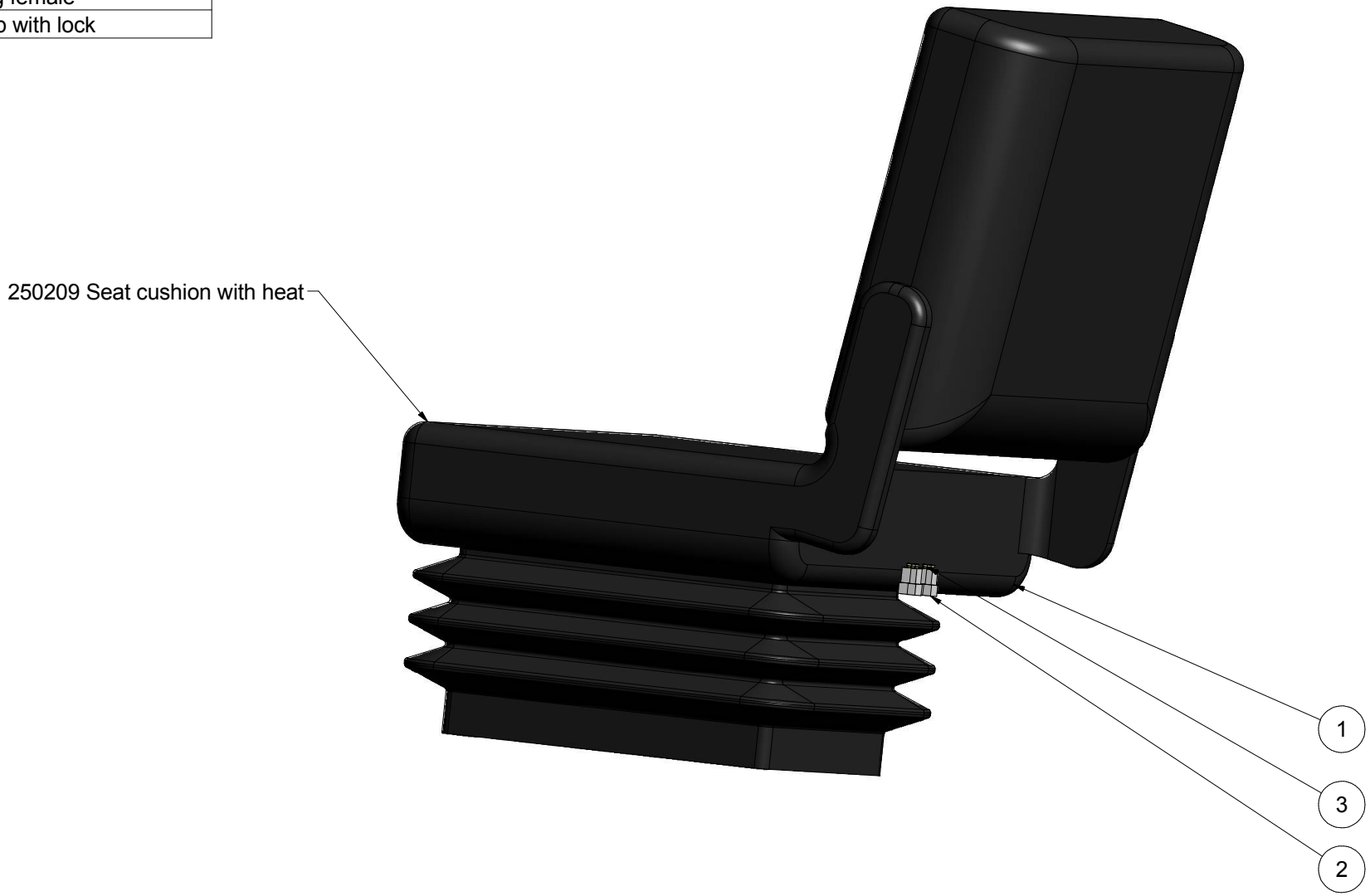

Alle kanter reifes
Breake all edges

REV	DESCRIPTION	DATE	APPROVED
A	Made	02-07-2013	KC

REVISION HISTORY

This document is strictly confidential and must on no ground be reproduced or shared with third parties.
HEDENSTED GRUPPEN A/S

Hedensted Gruppen

Scale: 1 : 4	Ikke angivet tolerancer iht./ Not specificed tolerance according to: DS/ISO 2768-m	Sheet size: A3
	Overfl. beskaffenhed/Surface properties: No	Sheet: 1 /1
Part No.: 250206	Material:	
Description: Seat kit air suspension		
Description: Feeder		

PARTS LIST			
ITEM	QTY	PART NUMBER	DESCRIPTION
1	4	11408012	Hexagon bolt M8x12 FZB
2	4	11408020	Hexagon bolt M8x20 FZB
3	1	250139	Seat console
4	1	250250	Safety belt for Std seat
5	2	99852226	Flat crimp with lock
6	1	99855008	Multi plug female
7	1	M100108	Standard seat for Feeder

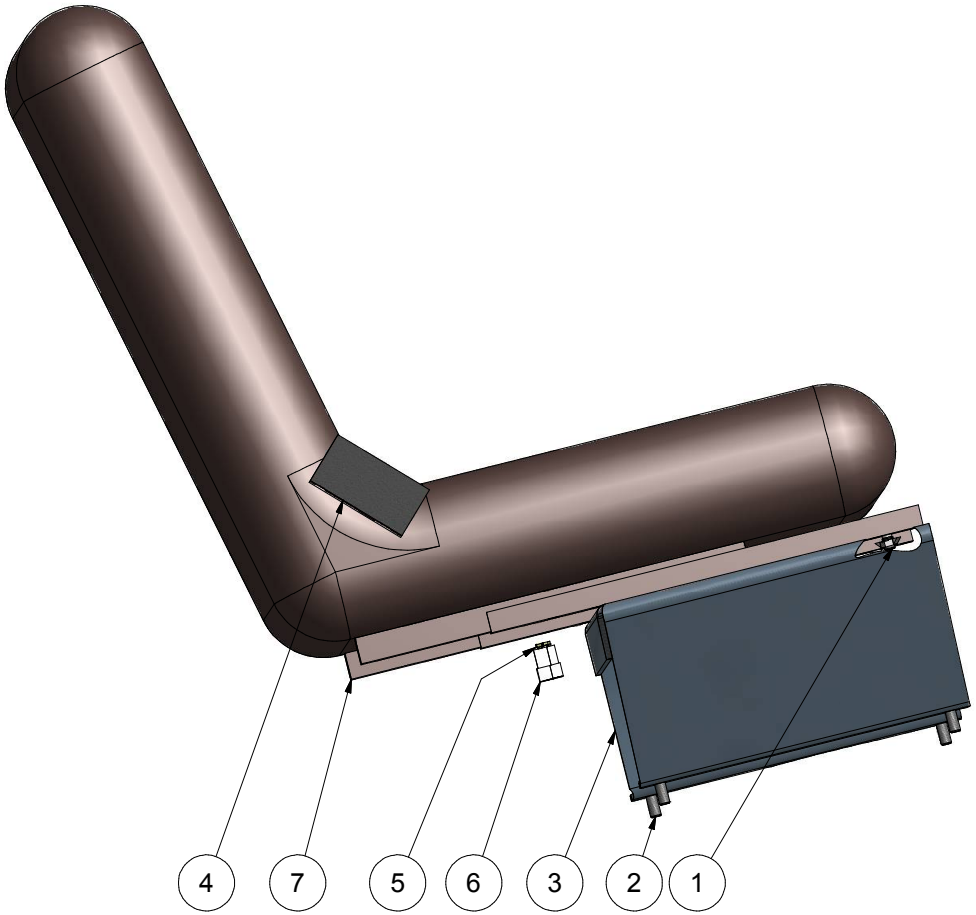

Alle kanter reifes
Breake all edges

REV	DESCRIPTION	DATE	APPROVED
A	Made	02-07-2013	KC

REVISION HISTORY

This document is strictly confidential and must on no account be reproduced or made available to third parties.
HEDENSTED GRUPPEN A/S

Hedensted Gruppen

Scale: 1 : 4	Ikke angivet tolerancer iht./ Not specificed tolerance according to: DS/ISO 2768-m	Sheet size: A3
	Overfl. beskaffenhed/Surface properties: No	Sheet: 1 /1
Part No.: 250204	Material:	
Description: Seat kit standard		
Description: Feeder		

PARTS LIST			
ITEM	QTY	PART NUMBER	DESCRIPTION
1	1	M100350	Right rear mud guard
2	1	M100351	Leftt rear mud guard
3	8	11410025	Hexagon bolt M10x25 FZB
4	8	82110000	Washer M10 FZB
5	8	17910000	Self-locking nut M10 FZB

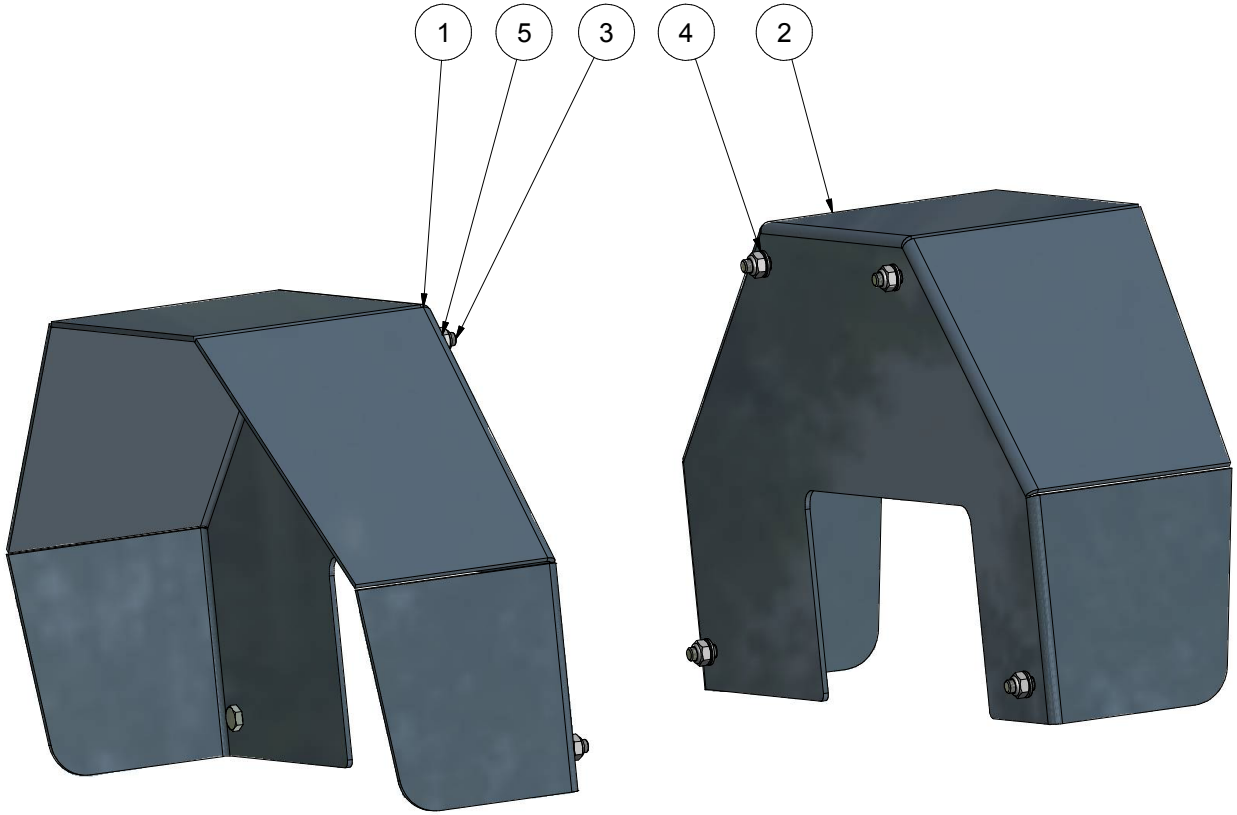

Breake all edges

REV	DESCRIPTION	DATE	APPROVED
A	Made	26-05-2015	KC

REVISION HISTORY

This document is strictly confidential and must on no ground be reproduced or shared with third parties.
HEDENSTED GRUPPEN A/S

HEDENSTED GRUPPEN

Scale: 1 : 4	Not specificed tolerance according to: DS/ISO 2768-m		Sheet size: A3
	Surface properties: No		Sheet: 1 /1
Part No.: M100356	Revision:	Material:	
Description 1: Rear mud guard kit			
Description 2: Feeder 125/160			

HEDENSTED GRUPPEN

Vejlevej 15, DK-8722 Hedensted
Phone (+45) 75 89 12 44
Fax (+45) 75 89 11 80
www.hedensted-gruppen.dk