SPARE PARTS

Self emptying body drum Ø150 cm

Model 2018-20xx

Table of contents.

1. Spare parts.
2. Electric diagrams.
3. Air diagrams.

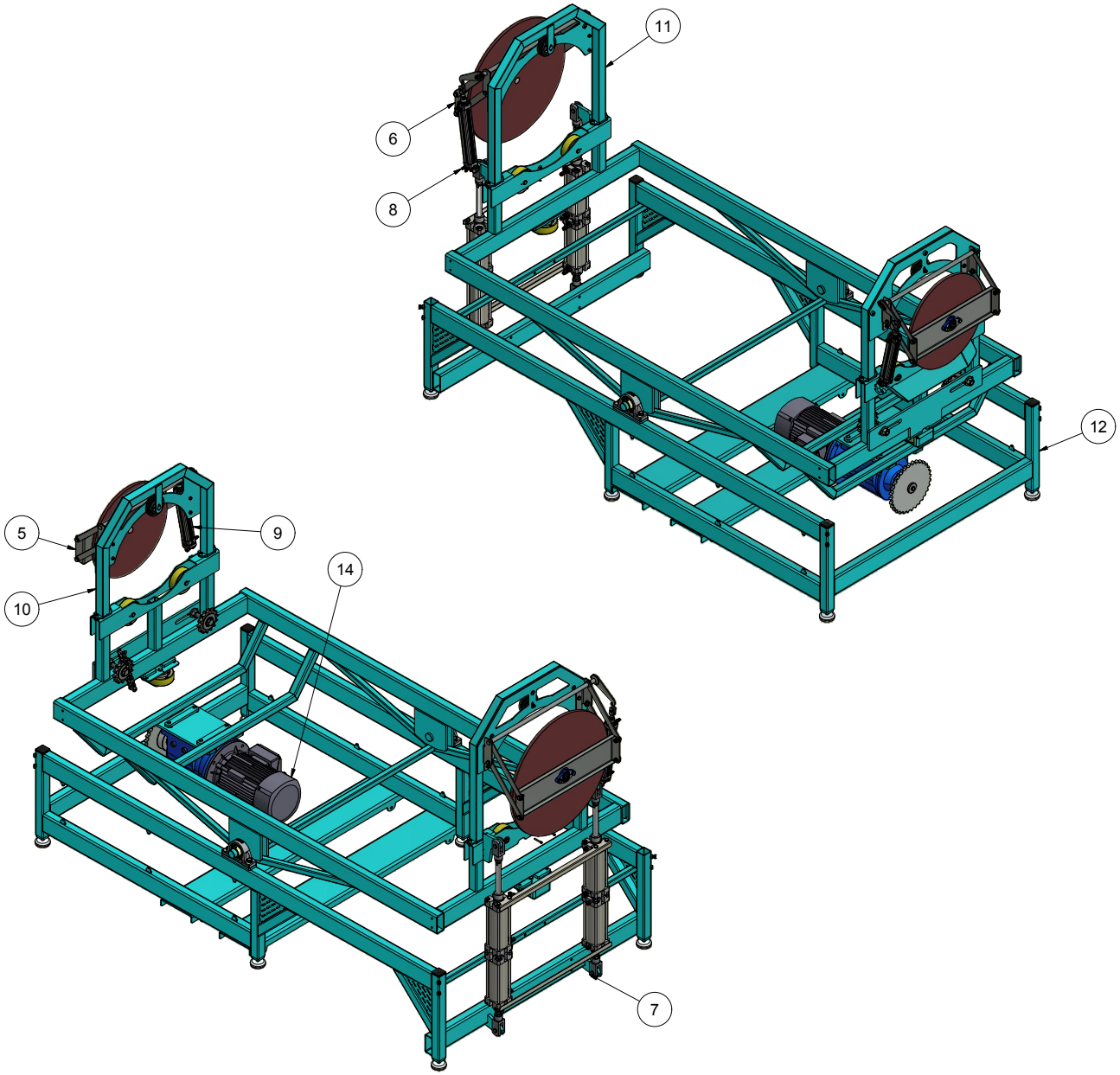

Parts List

ITEM	QTY	PART NUMBER	DESCRIPTION
1	4	10205040	Hexagon cylinder head M5x40 FZB
2	10	10206010	Hexagon cylinder head M6x10 FZB
3	1	16361	Mount electric box on machine
4	1	190405	Drum for Bodydrum
5	1	190409	Unloading lid complete
6	1	190411	Loading lid complete
7	1	190412	Main cylinder assembly
8	1	190413	Cylinder assembly for loading
9	1	190414	Cylinder assembly f.unloading
10	1	190416	Gable for unloading lid
11	1	190418	Gable for loading lid
12	1	190421	Frame assembly for drum
13	2	190422	Screen with logo for drum
14	1	190519	Gearmotor complete f.body drum
15	1	190615	Cover small sprocket assembly1
16	1	190625	Side cover assembly 1
17	1	190630	Side cover assembly 2
18	1	190635	Upper cover for chain
19	1	190645	Cover for gable Ø 600
20	1	190650	Lower cover for gable Ø600
21	1	190655	Side cover assembly 3
22	1	190660	Side cover assembly 4
23	1	190750	Brace for sensor
24	1	190755	Plate for sensor
25	2	190760	Brace 1 for wire
26	2	190765	Brace 2 for wire
27	1	190770	Brace 3 for wire
28	55	190771	Bolt buttenhead large head
29	12,5 m	216116	Air hose Ø6mm PUR Red
30	12,5 m	216118	Air hose Ø6mm PUR Blue
31	10,0 m	216122	Air hose Ø8mm PUR Red
32	10,0 m	216124	Air hose Ø8mm PUR Blue
33	1	30041	Id plate body drum
34	1	425933	Expansion spring Ø3,2 D23 L180
35	1	425934	Wire emergency stop 2N/C
36	1	425938	Wire connector
37	2	425942	Emergency logo for wire
38	4	430450	Axle for wire emergency stop - short
39	4	430460	Housing for wire emergency stop - short
40	4	430465	Wheel for wire emergency stop
41	6,0 m	600138	Cable CY-JZ 4x2,5mm² PVC w/screen
42	1	600455	Cabel gland M20 Ø5-12
43	4,5 m	600528	Cable OZ 4x0,75mm² PVC
44	1	600830	Cable w. elbow plug M12 4P 5M
45	1	600835	Sensor M30 inductive, w. socket m12 4p
46	2	7003208	Blind rivet Ø3.2x8 (4-5,5)
47	8	76008020	Buttonhead bolt M8x20 FZB
48	4	89710000	Seeger ring for shaft Ø10
49	8,5 m	M100039	Inox wire 7x7 Ø3
50	1	M102513	Stand for controls assembly, ø150 bodydrum
51	1	M102641	Cover
52	1	M102642	Lower cover for chain
53	1	M102689	Cover 2 for wheel

Break all edges

Revision:	Approved	Date:	Revision Description
2	MBO	30-04-2017	Control box changed to model 2017

This document is the property of HEDENSTED GRUPPEN A/S

HEDENSTED GRUPPEN

Scale: 1:15	Not specified tolerance according to:		Sheet size: A2
	Surface properties:		Sheet: 1 /3
Part No.: 190055	Material:		

Description 1: HG self emtying body drum Ø150

Description 2: 3x400+0+PE (Capacity 125 Males)

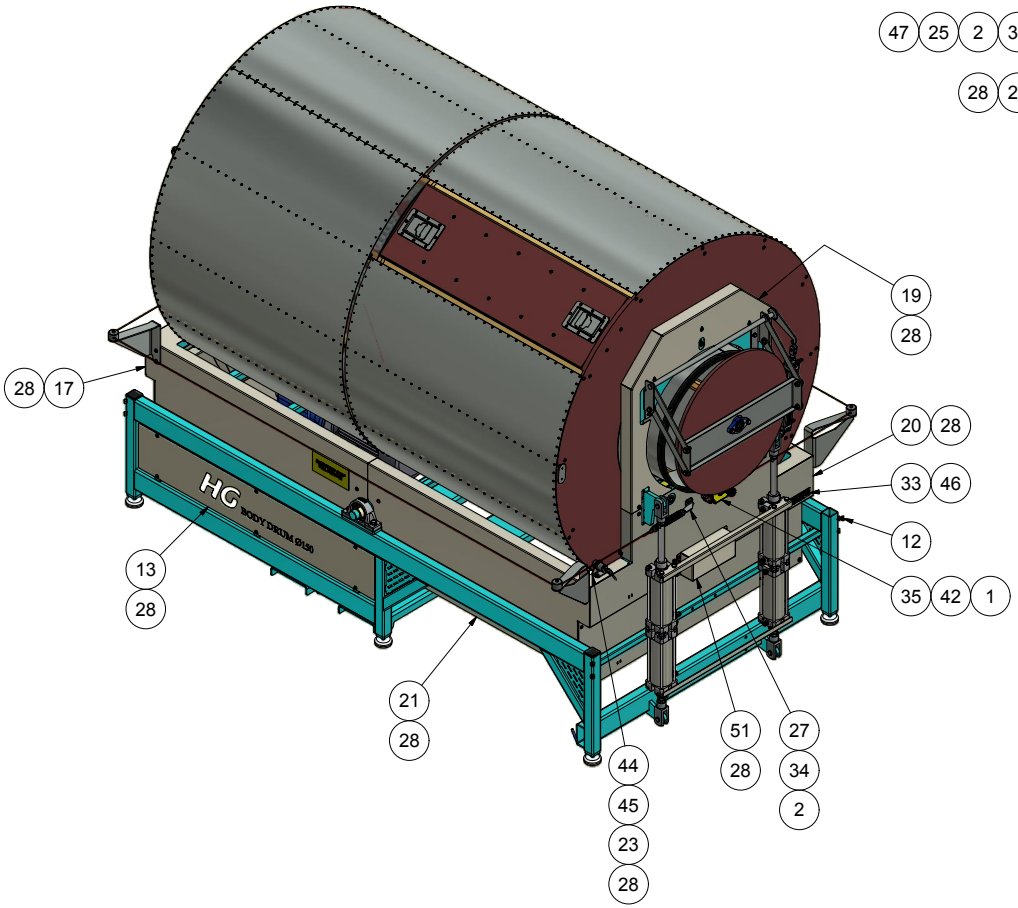

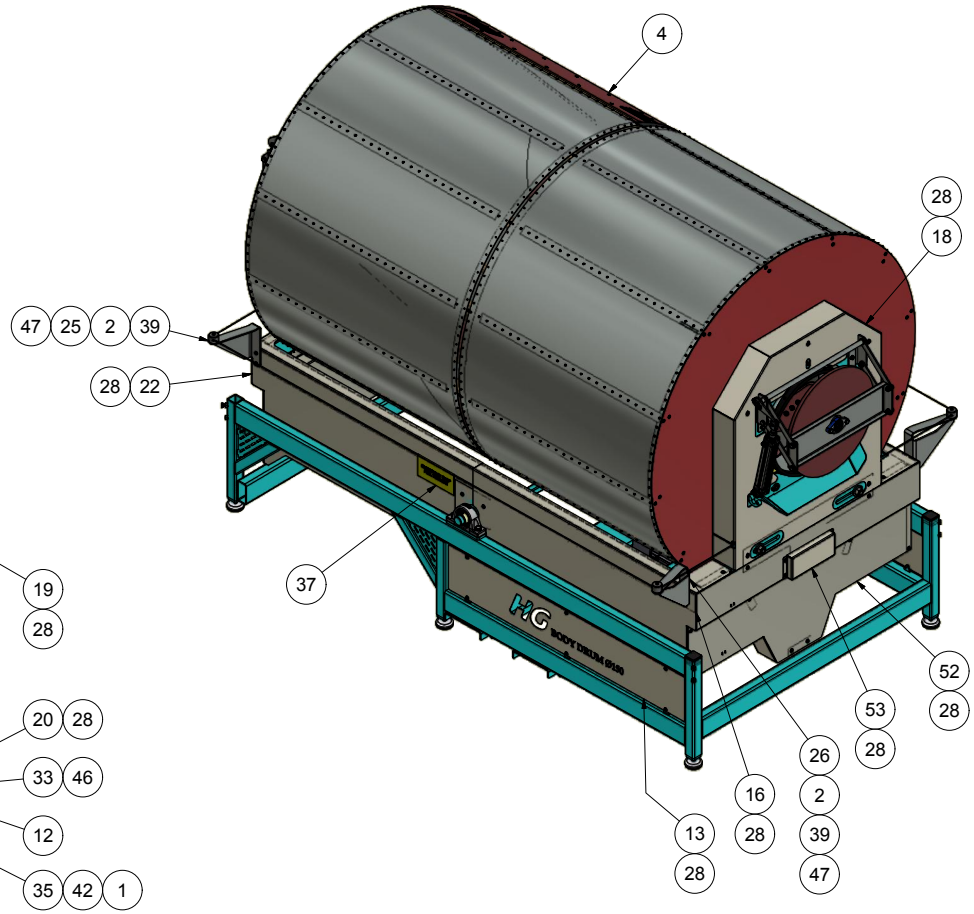

Break all edges

Revision:	Approved	Date:	Revision Description
2	MBO	30-04-2017	Control box changed to model 2017

This drawing is strictly confidential and the property of HEDENSTED GRUPPEN A/S

HEDENSTED GRUPPEN

Scale: 1:15	Not specified tolerance according to:	Sheet size: A2	
	Surface properties:	Sheet: 2 /3	
Part No: 190055	Material:		
Description 1: HG self emtying body drum Ø150			
Description 2: 3x400+0+PE (Capacity 125 Males)			

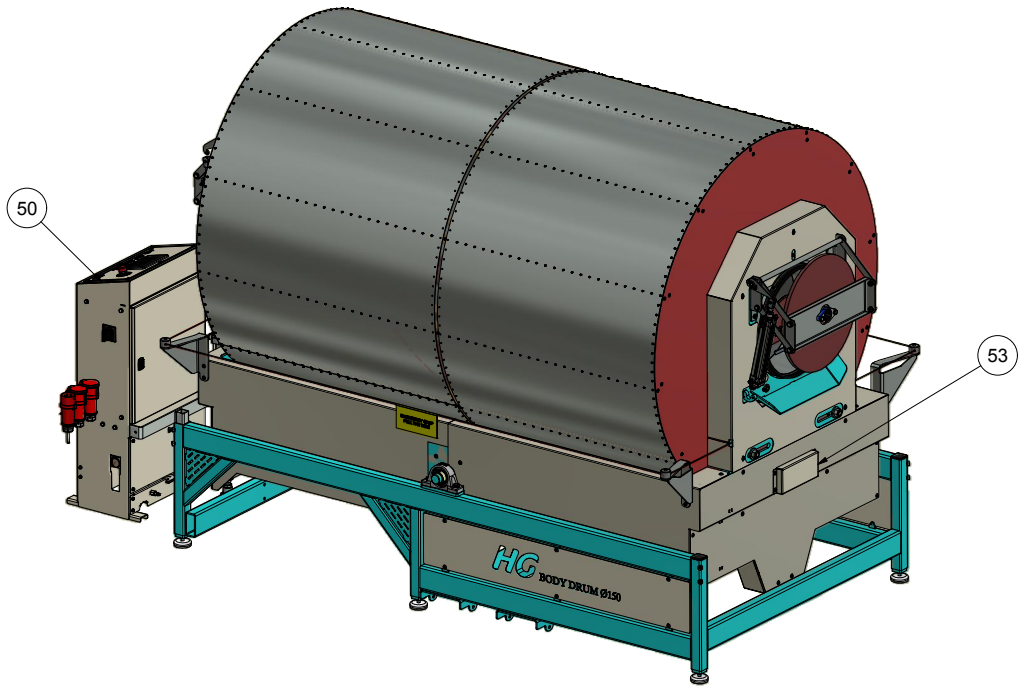

Break all edges

Revision:	Approved	Date:	Revision Description
2	MBO	30-04-2017	Control box changed to model 2017

This document is the property of HEDENSTED GRUPPEN A/S. Reproduction or distribution without written permission is prohibited.

HEDENSTED GRUPPEN

Scale: 1:15	Not specified tolerance according to:	Sheet size: A2
	Surface properties:	Sheet: 3 /3
Part No.: 190055	Material:	
Description 1: HG self emtying body drum Ø150		
Description 2: 3x400+0+PE (Capacity 125 Males)		

Parts List			
ITEM	QTY	PART NUMBER	DESCRIPTION
1	16	11406016	Hexagon bolt M6x16 FZB
2	881	140854	Wood screw pan head 3,5 x 20
3	1	190402	Drum assembly 1
4	1	190406	Hatch complete
5	2	190420	Cover for grating cone
6	1	190425	Cover wide lage
7	1	190430	Cover wide small
8	4	190455	Guide for cone
9	4	190460	Guide for drum
10	4	190462	Battern for guide
11	4	190480	Joint 1 for guide
12	4	190485	Joint 2 for guide
13	4	190490	Joint 3 for guide
14	4	190495	Joint 4 for guide
15	4	190500	Joint 5 for guide
16	4	190505	Joint 6 for guide
17	12	190510	Tension plate for Joint
18	48	190771	Bolt buttenhead large head
19	120	190772	Bolt buttenhead large head
20	120	19206000	Drive in nut M6 FZB
21	20	2704040	Wood screw countersunk head 4 x 40
22	60	64485025	Wood screw pan head 4,5 x 35
23	240	7003208	Blind rivet Ø3.2x8 (4-5,5)

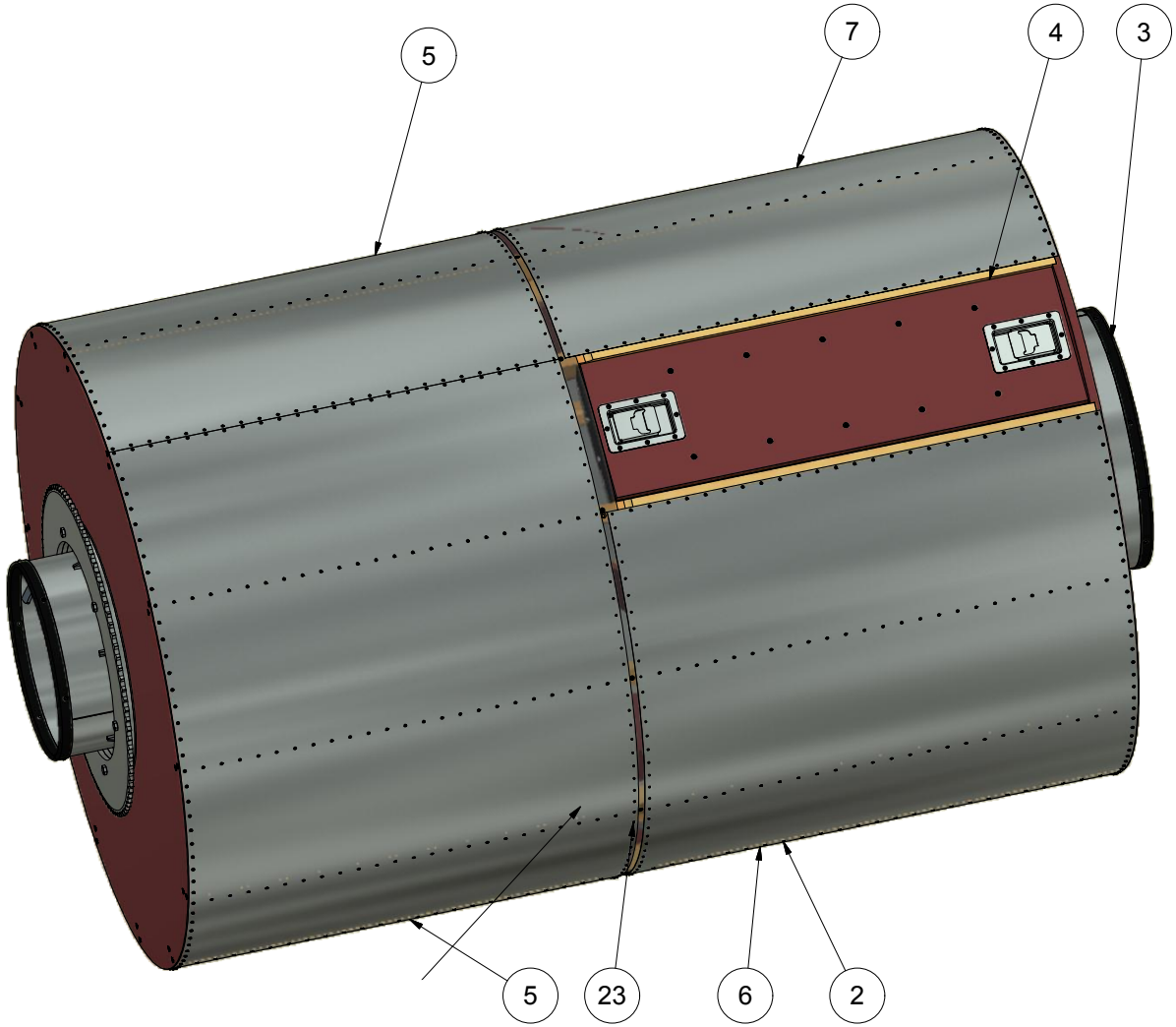

Break all edges

Revision:	Approved	Date:	Revision Description
1	HG	27-09-2015	Revision changed to numeric

The document is strictly confidential and may in no account be copied or discloses to any third person.
HEDENSTED GRUPPEN A/S

HEDENSTED GRUPPEN

Scale: 1 : 12	Not specificed tolerance according to: DS/ISO 2768-m		Sheet size: A3
	Surface properties:		Sheet: 1 /3
Part No.: 190405	Material:		
Description 1: Drum for Bodydrum			
Description 2:			

Parts List			
ITEM	QTY	PART NUMBER	DESCRIPTION
1	16	11406016	Hexagon bolt M6x16 FZB
2	881	140854	Wood screw pan head 3,5 x 20
21	20	2704040	Wood screw countersunk head 4 x 40
3	1	190402	Drum assembly 1
4	1	190406	Hatch complete
5	2	190420	Cover for grating cone
6	1	190425	Cover wide lage
7	1	190430	Cover wide small
8	4	190455	Guide for cone
9	4	190460	Guide for drum
10	4	190462	Battern for guide
11	4	190480	Joint 1 for guide
12	4	190485	Joint 2 for guide
13	4	190490	Joint 3 for guide
14	4	190495	Joint 4 for guide
15	4	190500	Joint 5 for guide
16	4	190505	Joint 6 for guide
17	12	190510	Tension plate for Joint
18	48	190771	Bolt buttenhead large head
19	120	190772	Bolt buttenhead large head
20	120	19206000	Drive in nut M6 FZB
22	60	64485025	Wood screw pan head 4,5 x 35
23	240	7003208	Blind rivet Ø3.2x8 (4-5,5)

C (1 : 2)

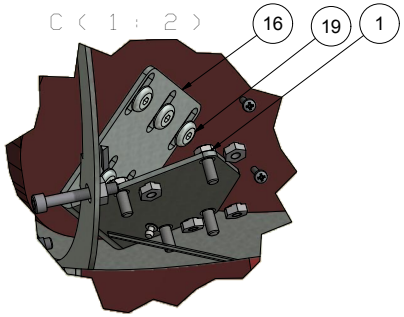

D (1 : 4)

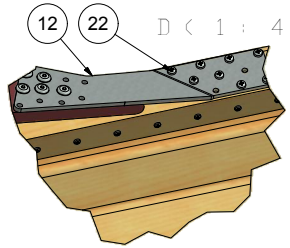

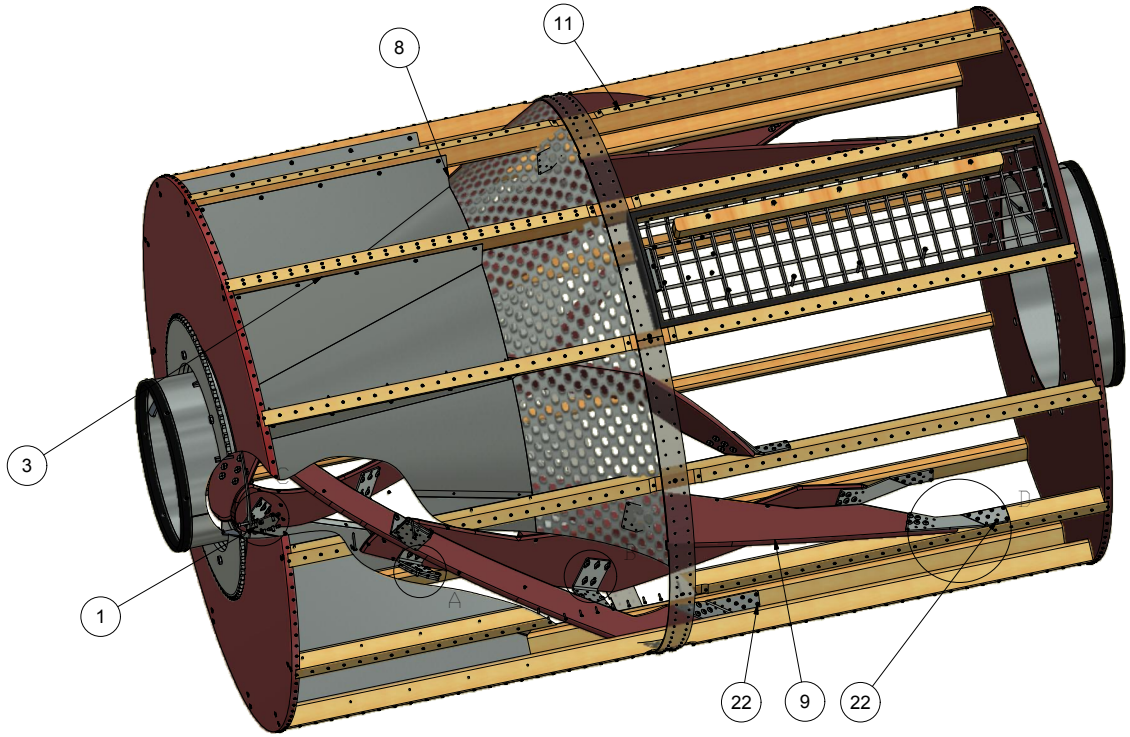

A (1 : 2)

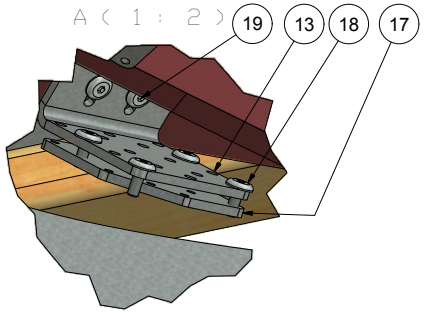

B (1 : 2)

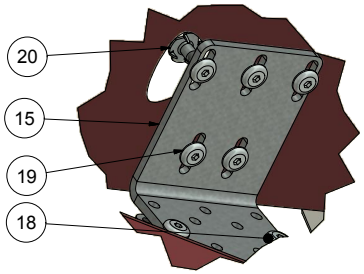

Break all edges

Revision:	Approved	Date:	Revision Description
1	HG	27-09-2015	Revision changed to numeric

This drawing is the property of HEDENSTED GRUPPEN A/S

HEDENSTED GRUPPEN

Scale: 1 : 12	Not specified tolerance according to: DS/ISO 2768-m	Sheet size: A2
	Surface properties:	Sheet: 2 /3
Part No: 190405	Material:	
Description 1: Drum for Bodydrum		
Description 2:		

H-H (1 : 12)

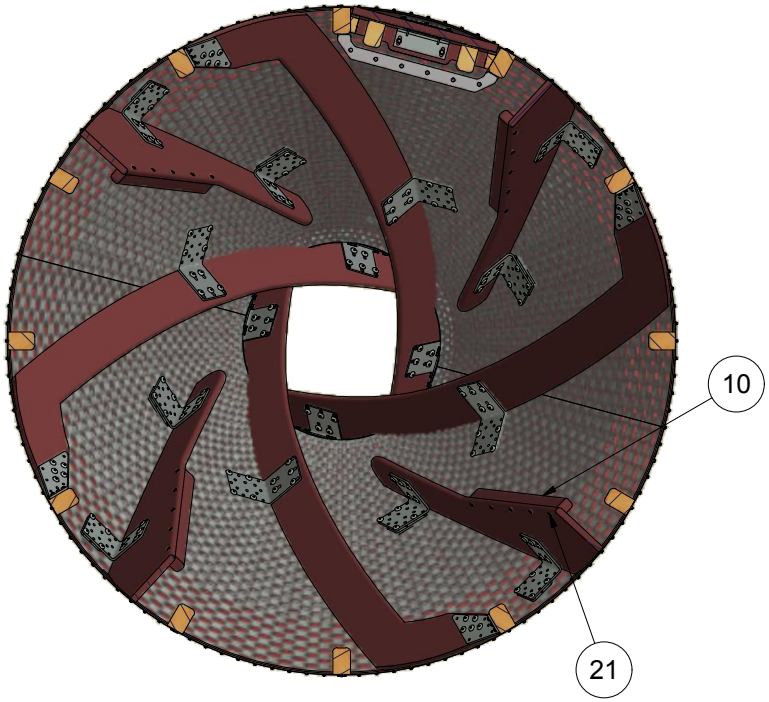

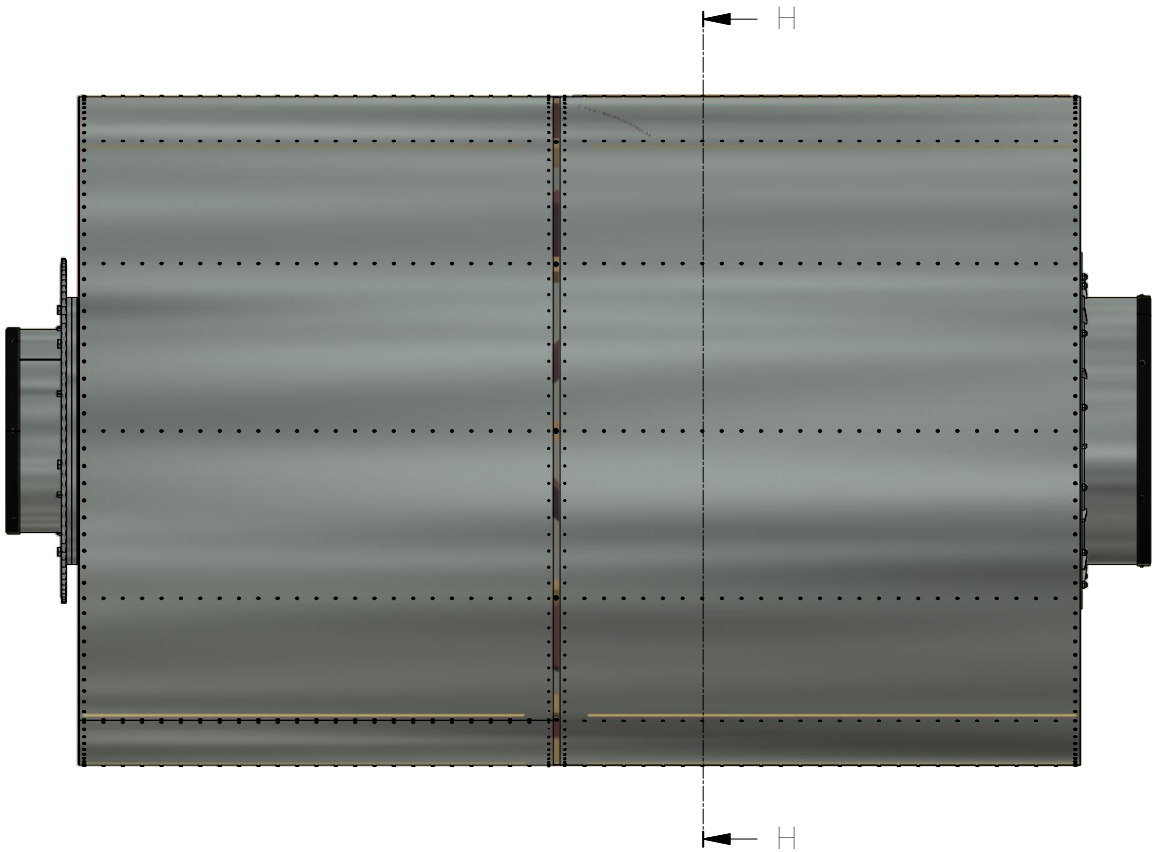

Break all edges

HEDENSTED GRUPPEN	Scale: 1 : 12	Not specificed tolerance according to: DS/ISO 2768-m	Sheet size: A3
		Surface properties:	Sheet: 3 /3
Part No.: 190405	Material:		
Description 1: Drum for Bodydrum			
Description 2:			

The document is strictly confidential and can in no account be copied or discloses to any third person HEDENSTED GRUPPEN A/S

Revision:	Approved	Date:	Revision Description
1	HG	27-09-2015	Revision changed to numeric

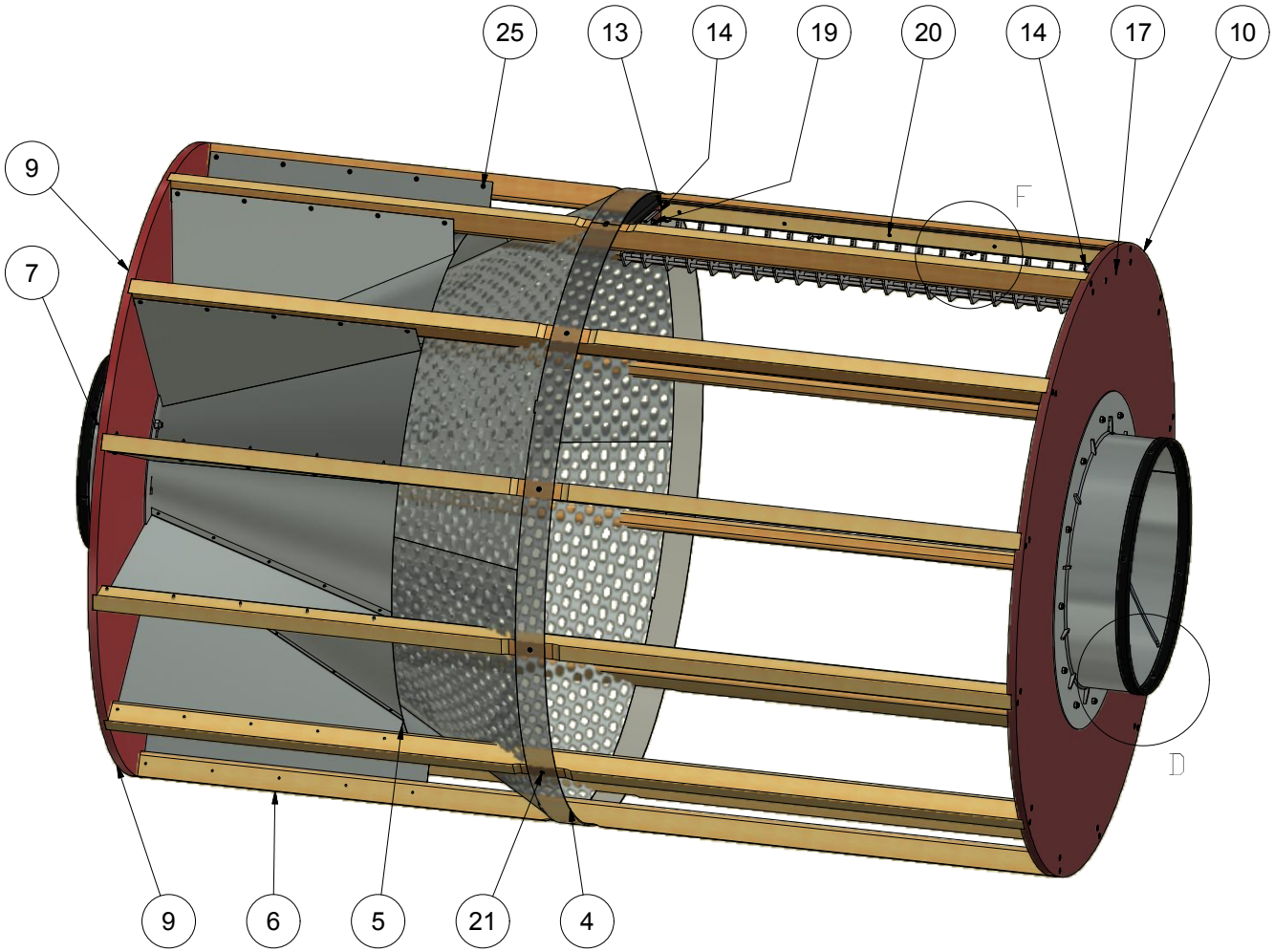

Parts List			
ITEM	QTY	PART NUMBER	DESCRIPTION
1	6	10208040	Hexagon cylinder head M8x40 FZB
2	6	11412080	Hexagon bolt M12x80 FZB
3	12	17908000	Self-locking nut M8 FZB
4	1	190400	Grating cone f/ body drum ø150
5	1	190408	Sawdust cone assembly 1
6	12	190415	Battern for body drum
7	1	190435	End bearing Ø457
8	1	190440	End bearing Ø600
9	1	190445	End sheet 1
10	1	190450	End sheet 2
11	1	190515	Sprocket for drum Z95-1inch
12	2	190525	Shim for sprocket
13	2	190550	Plate for Clamp
14	2	190587	Closing plate
15	2	190590	Wood strip
16	3 m	190745	Celular rubber band 15x8mm
17	2	20406045	Hexagon countersunk head M6x45 FZB
18	3,5 m	20424	Edging band
19	4	22906000	Hexagon dome Lock nut M6 FZB
20	10	2703035	Wood screw countersunk head 3,5 x 35
21	12	2705050	Wood screw countersunk head 5 x 50
22	48	2706070	Wood screw countersunk head 6 x70
23	2	64406030	Cup head square neck bolt M6x30 FZB
24	12	64408035	Cup head square neck bolt M8x35 FZB
25	68	66705050	Wood screw pan head 5,0 x 50
26	12	7004016	Blind rivet Ø4x16 (11-12,5)
27	12	82104000	Washer M4 FZB
28	2	87606000	Washer Ø6,4x17x3 FZB
29	1	M103135	Safetygrid for Ø150 drum

D (1 : 6)

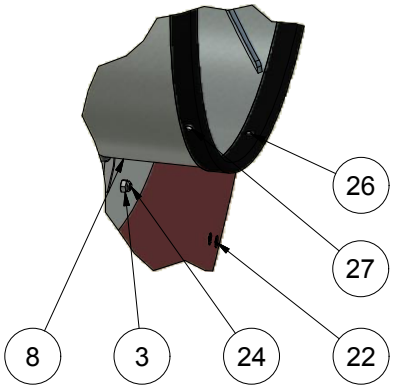

F (1 : 6)

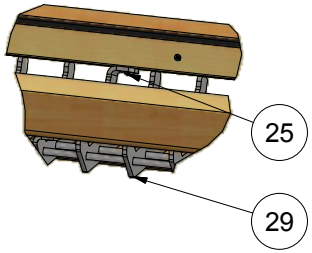

Revision:	Approved	Date:	Revision Description
2	KL	09-01-2018	Safety grid added to door

Break all edges

HEDENSTED GRUPPEN	Scale: 1 : 12	Not specificed tolerance according to:	Sheet size: A3
		Surface properties:	Sheet: 1 /4
Part No.: 190402	Material:		
Description 1: Drum assembly 1			
Description 2:			

The document is strictly confidential and can in no account be copied or discloses to any third person HEDENSTED GRUPPEN A/S

A-A (1 : 15)

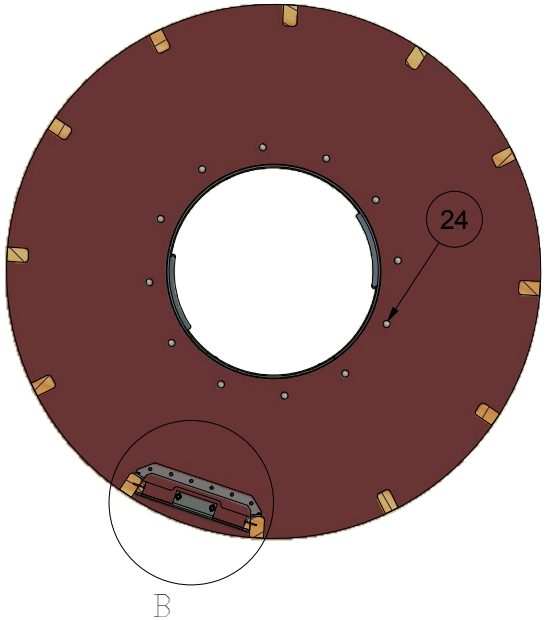

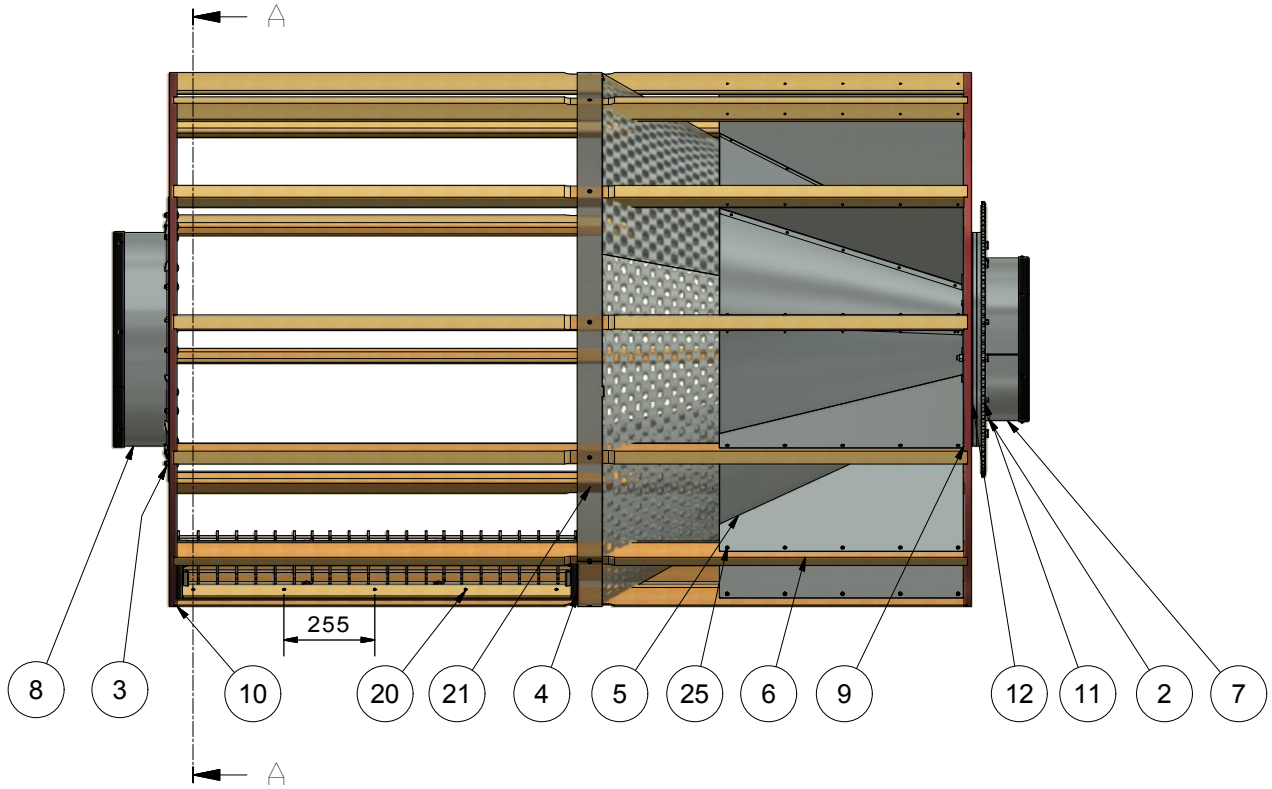

B (1 : 6)

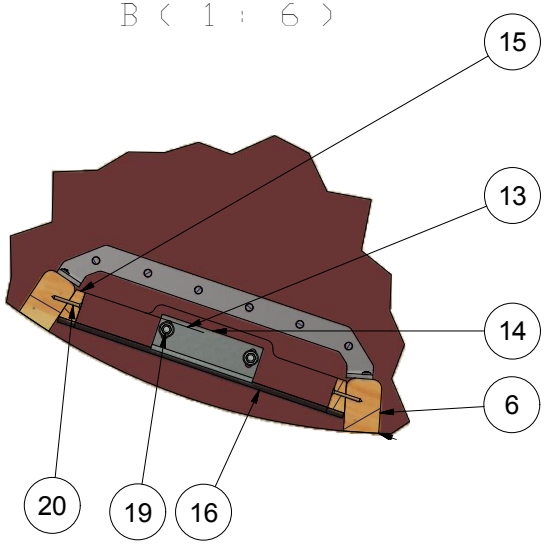

Break all edges

Revision:	Approved	Date:	Revision Description
2	KL	09-01-2018	Safety grid added to door

The document is strictly confidential and can in no account be copied or discloses to any third person.

HEDENSTED GRUPPEN

HEDENSTED GRUPPEN A/S

Scale: 1 : 12	Not specificed tolerance according to:	Sheet size: A3
	Surface properties:	Sheet: 3 /4
Part No.: 190402	Material:	
Description 1: Drum assembly 1		
Description 2:		

E-E (1 : 15)

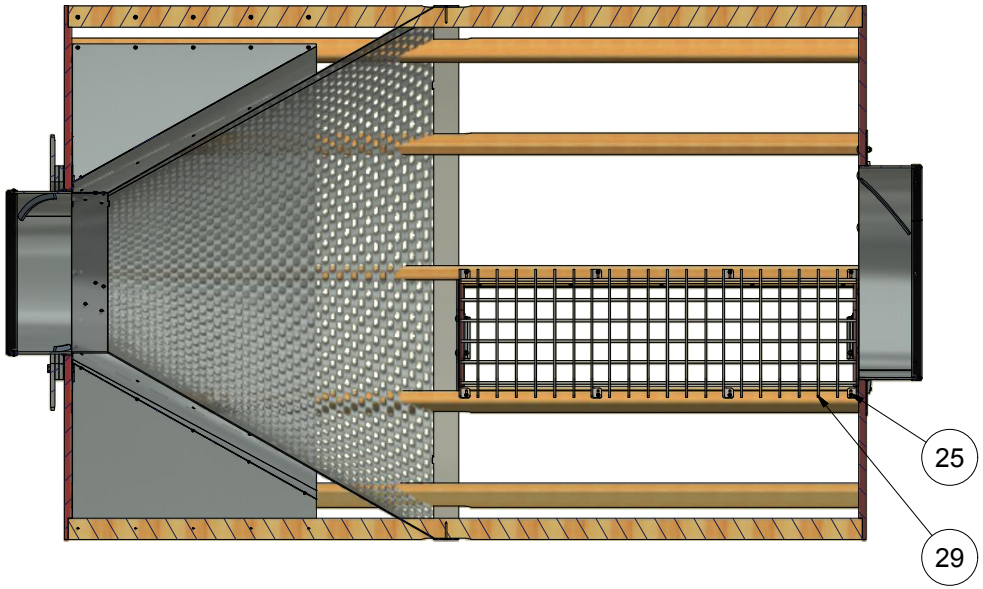

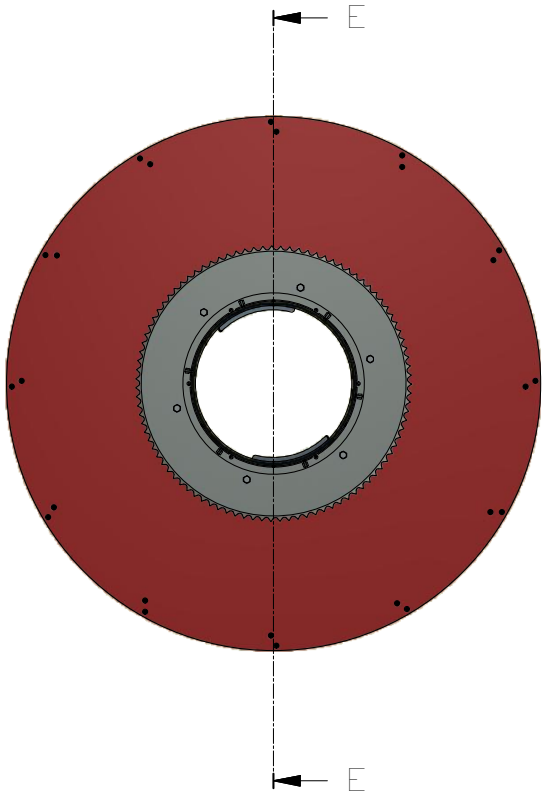

Break all edges

Revision:	Approved	Date:	Revision Description
2	KL	09-01-2018	Safety grid added to door

The document is strictly confidential and may in no account be copied or discloses to any third person.

HEDENSTED GRUPPEN A/S

HEDENSTED GRUPPEN

Scale: 1 : 12	Not specificed tolerance according to:		Sheet size: A3
	Surface properties:		Sheet: 4 /4
Part No.: 190402	Material:		
Description 1: Drum assembly 1			
Description 2:			

Parts List			
ITEM	QTY	PART NUMBER	DESCRIPTION
1	1	190470	Trap Door
2	2	190585	Clamp for hatch
3	2	190586	Gasget for clamp
4	16	140872	Wood screw 5x16
5	2	190417	Battern for hatch
6	10	2706070	Wood screw countersunk head 6x70

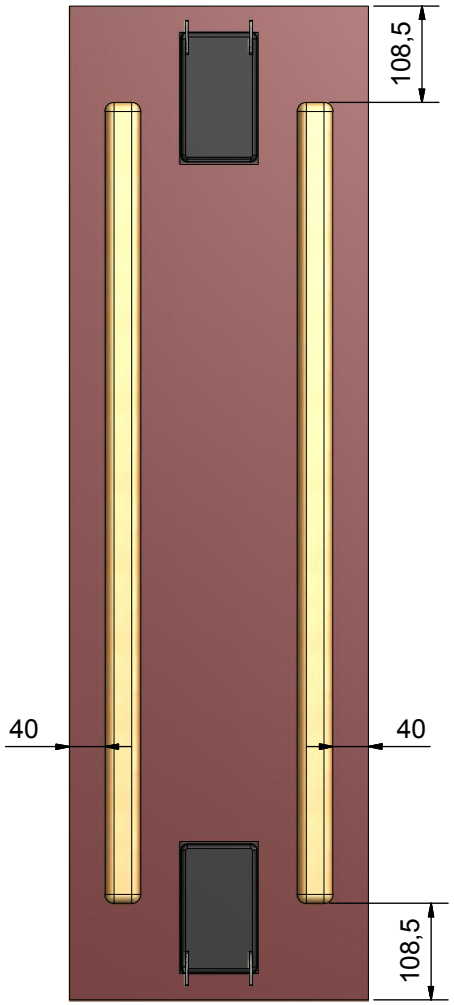

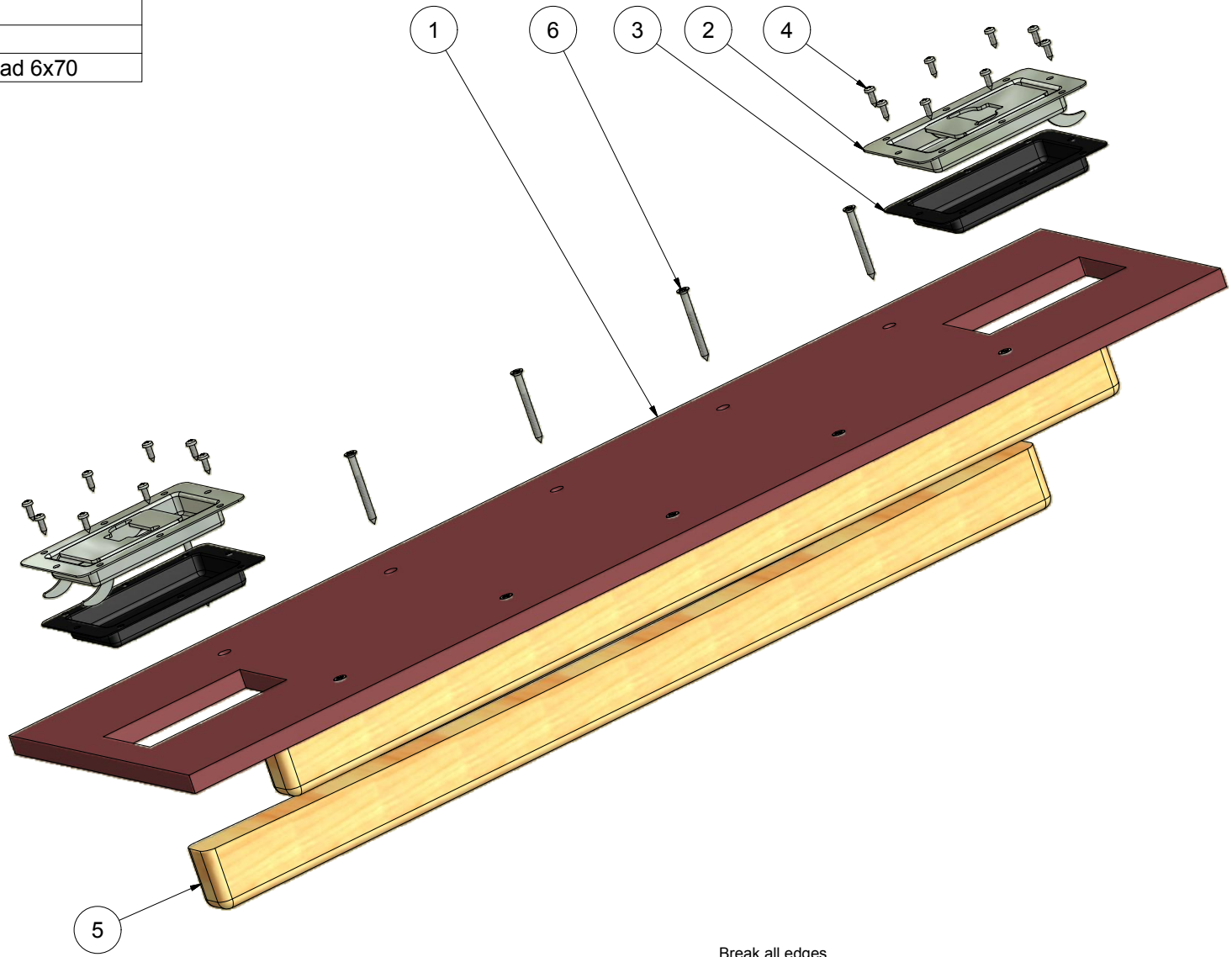

Break all edges

Revision:	Approved	Date:	Revision Description
1	HG	28-09-2015	Revision changed to numeric

The document is strictly confidential and can in no account be copied or discloses to any third person.

HEDENSTED GRUPPEN

HEDENSTED GRUPPEN A/S

Scale: 1 : 4	Not specificed tolerance according to: DS/ISO 2768-m		Sheet size: A3
	Surface properties:		Sheet: 1 /1
Part No.: 190406	Material:		
Description 1: Hatch complete			
Description 2:			

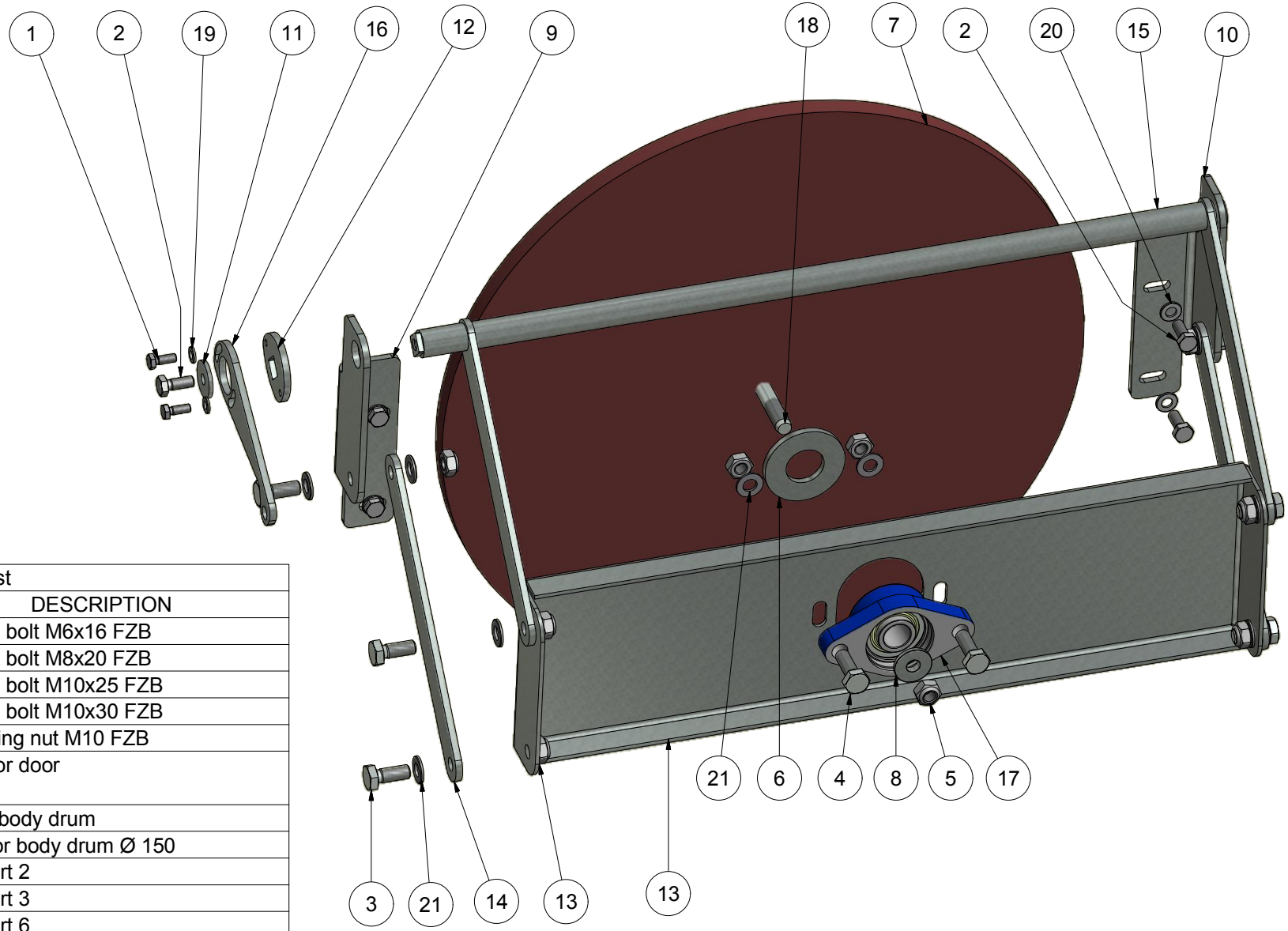

Parts List			
ITEM	QTY	PART NUMBER	DESCRIPTION
1	2	11406016	Hexagon bolt M6x16 FZB
2	5	11408020	Hexagon bolt M8x20 FZB
3	6	11410025	Hexagon bolt M10x25 FZB
4	2	11410030	Hexagon bolt M10x30 FZB
5	9	17910000	Self-locking nut M10 FZB
6	1	190535	Spacer for door
7	1	190555	Door for body drum
8	1	190640	Funnel for body drum Ø 150
9	1	190680	Hinge part 2
10	1	190685	Hinge part 3
11	1	190695	Hinge part 6
12	1	190700	Hinge part 8
13	1	190720	Hinge part 11
14	2	190725	Hinge part 14
15	1	190730	Hinge assembly 2
16	1	190735	Hinge part 15
17	1	473101	Y-bearingFYTB 20 TF
18	1	64410065	Cup head square neck bolt M10x65 FZB
19	2	82106000	Chamfered Washer M6 FZB
20	4	82108000	Chamfered Washer M8 FZB

Revision:	Approved	Date:	Revision Description
1	HG	28-09-2015	Revision changed to numeric

Break all edges

The document is strictly confidential and can in no account be copied or discloses to any third person.
HEDENSTED GRUPPEN A/S

HEDENSTED GRUPPEN

Scale: 1 : 3	Not specificed tolerance according to: DS/ISO 2768-m		Sheet size: A3
	Surface properties:		Sheet: 1 /1
Part No.: 190409	Material:		
Description 1: Unloading lid complete			
Description 2:			

Parts List			
ITEM	QTY	PART NUMBER	DESCRIPTION
1	2	11406016	Hexagon bolt M6x16 FZB
2	5	11408020	Hexagon bolt M8x20 FZB
3	6	11410025	Hexagon bolt M10x25 FZB
4	2	11410030	Hexagon bolt M10x30 FZB
5	9	17910000	Self-locking nut M10 FZB
6	1	190535	Spacer for door
7	1	190640	Funnel for body drum Ø 150
8	1	190675	Hinge part 1
9	1	190680	Hinge part 2
10	1	190685	Hinge part 3
11	2	190690	Hinge part 5
12	1	190695	Hinge part 6
13	1	190700	Hinge part 8
14	1	190705	Hinge part 9
15	1	190715	Hinge assembly 1
16	1	190740	Door for Body drum
17	1	473101	Y-bearingFYTB 20 TF
18	1	64410065	Cup head square neck bolt M10x65 FZB
19	2	82106000	Chamfered Washer M6 FZB
20	4	82108000	Chamfered Washer M8 FZB
21	15	82110000	Chamfered Washer M10 FZB

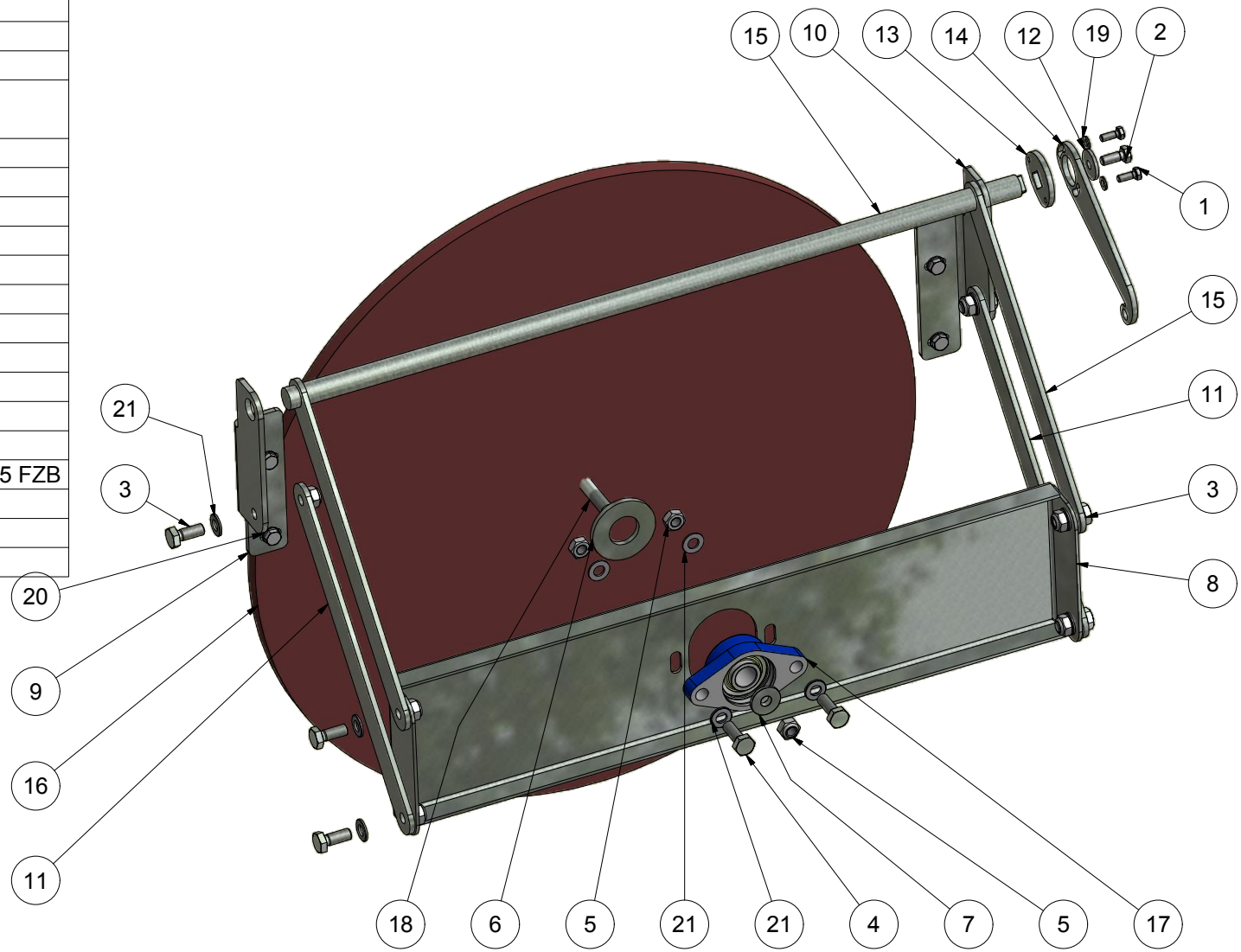

Break all edges

Revision:	Approved	Date:	Revision Description
1	HG	28-09-2015	Revision changed to numeric

The document is strictly confidential and can in no account be copied or discloses to any third person HEDENSTED GRUPPEN A/S

HEDENSTED GRUPPEN

Scale: 1 : 4	Not specificed tolerance according to: DS/ISO 2768-m	Sheet size: A3
	Surface properties:	Sheet: 1 /1
Part No.: 190411	Material:	
Description 1: Loading lid complete		
Description 2:		

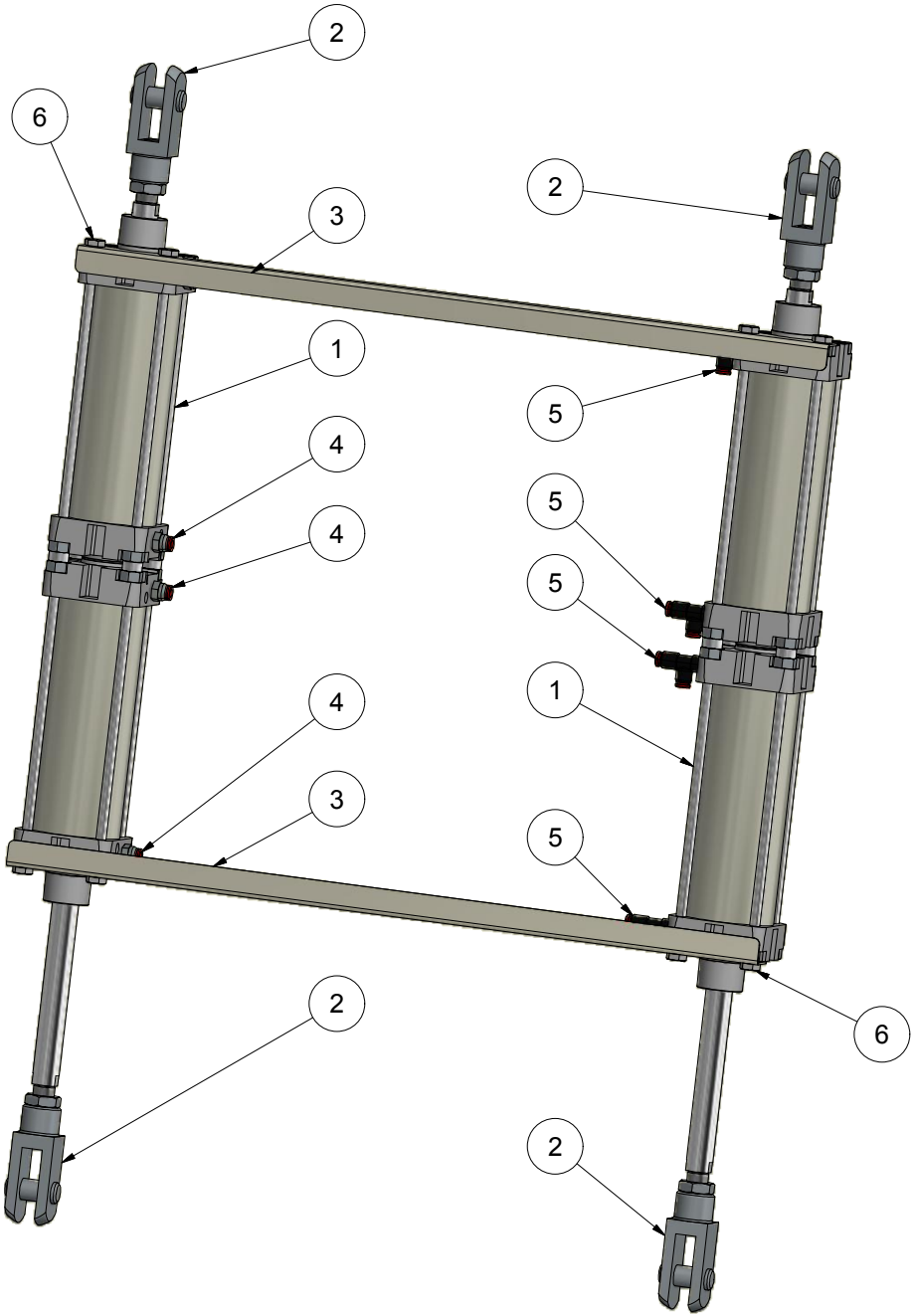

Parts List			
ITEM	QTY	PART NUMBER	DESCRIPTION
1	2	190545	Cylinder PRA 182080/M/160/160/MT
2	4	214128	F-Bracket QM/8080/25
3	2	190665	Brace for cylinder
4	4	215938	Straight connector Ø8 x 3/8"
5	4	216427	L-connector 3/8" x Ø8 x Ø8
6	8	11410020	Hexagon bolt M10x20 FZB

Break all edges

Revision:	Approved	Date:	Revision Description
1	HG	27-09-2015	Revision changed to numeric

The document is strictly confidential and can in no account be copied or discloses to any third person.
HEDENSTED GRUPPEN A/S

HEDENSTED GRUPPEN

Scale: 1 : 5	Not specificed tolerance according to: DS/ISO 2768-m		Sheet size: A3
	Surface properties:		Sheet: 1 /1
Part No.: 190412	Material:		
Description 1: Main cylinder assembly			
Description 2:			

Parts List			
ITEM	QTY	PART NUMBER	DESCRIPTION
1	4	10206016	Hexagon cylinder head M6x16 FZB
2	1	11420075	Hexagon bolt M20x75 FZB
3	2	1520000	Nut M20 FZB
4	1	190710	Hinge part 10
5	1	212062	Cylinder PRA/18232/M/250
6	1	214115	F-Bracket QM/8025/25
7	2	215105	Flow banjo control Ø6 x 1/8"

Break all edges

Revision:	Approved	Date:	Revision Description
1	MBO	10-05-2016	Valve changed

The document is strictly confidential and may in no account be copied or discloses to any third person.

HEDENSTED GRUPPEN

HEDENSTED GRUPPEN A/S

Scale: 1 : 2

Not specificed tolerance according to: DS/ISO 2768-m

Sheet size: A3

Surface properties:

Sheet: 1 /1

Part No.: 190413

Material:

Description 1: Cylinder assembly for loading

Description 2: lid

Parts List			
ITEM	QTY	PART NUMBER	DESCRIPTION
1	4	10206016	Hexagon cylinder head M6x16 FZB
2	1	212063	Cylinder PRA/182032/M/200
3	1	214115	F-Bracket QM/8025/25
4	1	214156	D-Bracket QA/8032/23
5	2	215105	Flow banjo control Ø6 x 1/8"

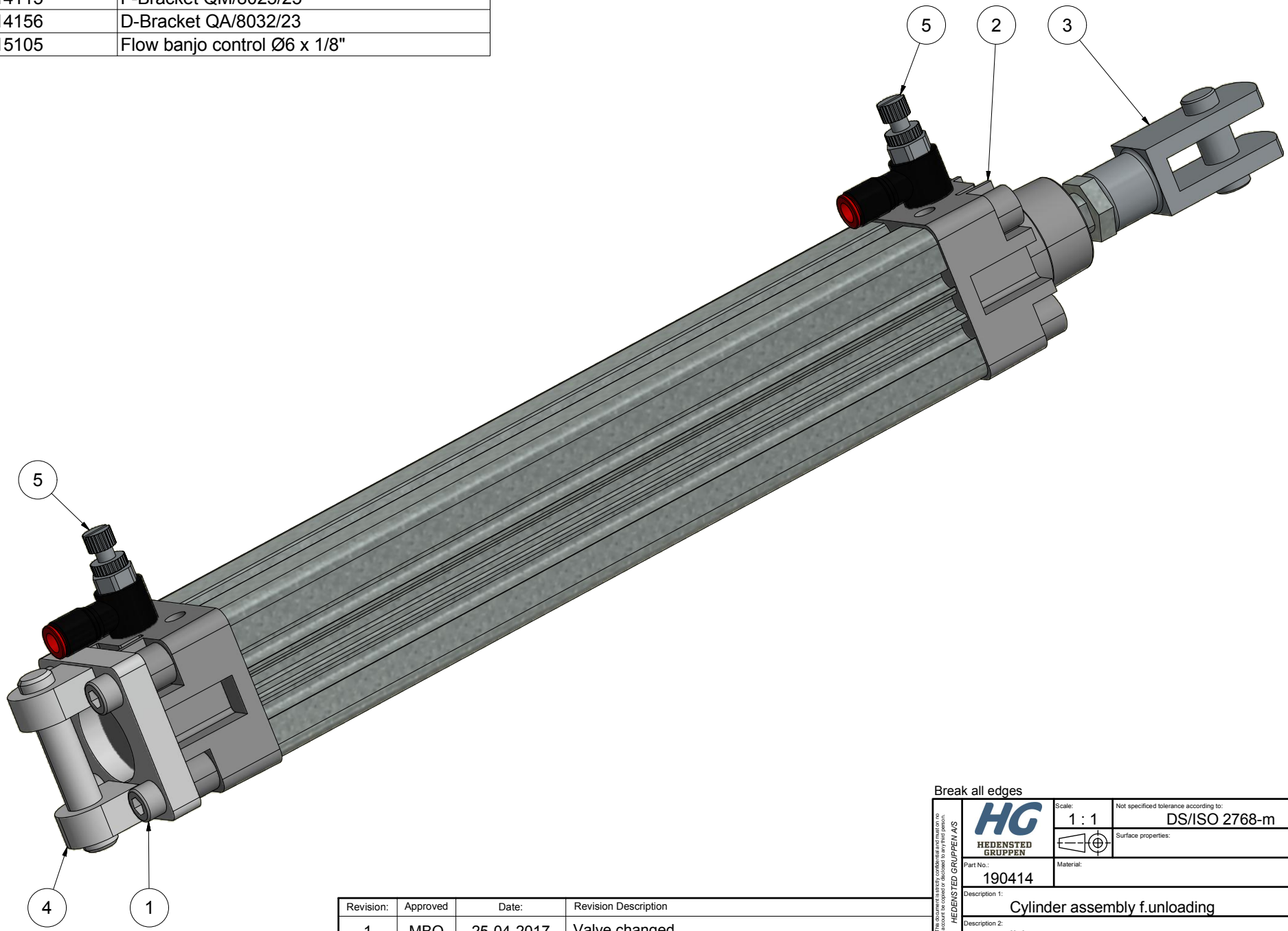

Break all edges

Revision:	Approved	Date:	Revision Description
1	MBO	25-04-2017	Valve changed

The document is strictly confidential and can in no account be copied or discloses to any third person.
HEDENSTED GRUPPEN A/S

HEDENSTED GRUPPEN

Scale: 1 : 1	Not specificed tolerance according to: DS/ISO 2768-m		Sheet size: A3
	Surface properties:		Sheet: 1 /1
Part No.: 190414	Material:		
Description 1: Cylinder assembly f.unloading			
Description 2: lid			

Parts List			
ITEM	QTY	PART NUMBER	DESCRIPTION
1	4	10210020	Hexagon cylinder head M10x20 FZB
2	1	17908000	Self-locking nut M8 FZB
3	1	19003	Wheel for through put drum
4	1	190570	Gable for Ø457
5	1	190775	Bushing for wheel
6	1	64408070	Cup head square neck bolt M8x70 FZB
7	1	82108000	Chamfered Washer M8 FZB

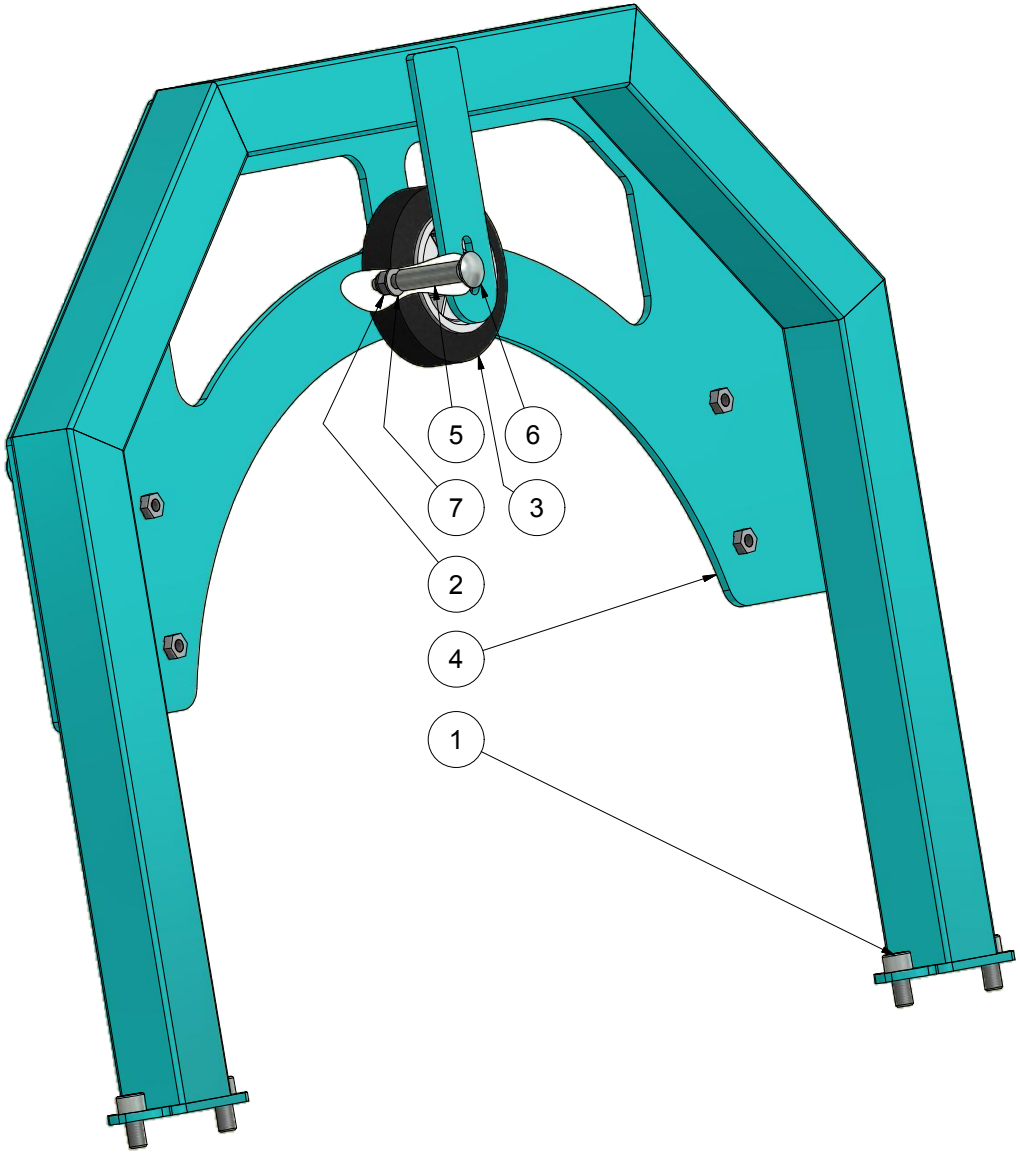

Break all edges

Revision:	Approved	Date:	Revision Description
1	HG	28-09-2015	Revision changed to numeric

The document is strictly confidential and may on no account be copied or discloses to any third person.

HEDENSTED GRUPPEN A/S

HEDENSTED GRUPPEN

Scale: 1 : 3

Not specificed tolerance according to: DS/ISO 2768-m

Sheet size: A3

Surface properties:

Sheet: 1 /1

Part No.: 190416

Material:

Description 1: Gable for unloading lid

Description 2:

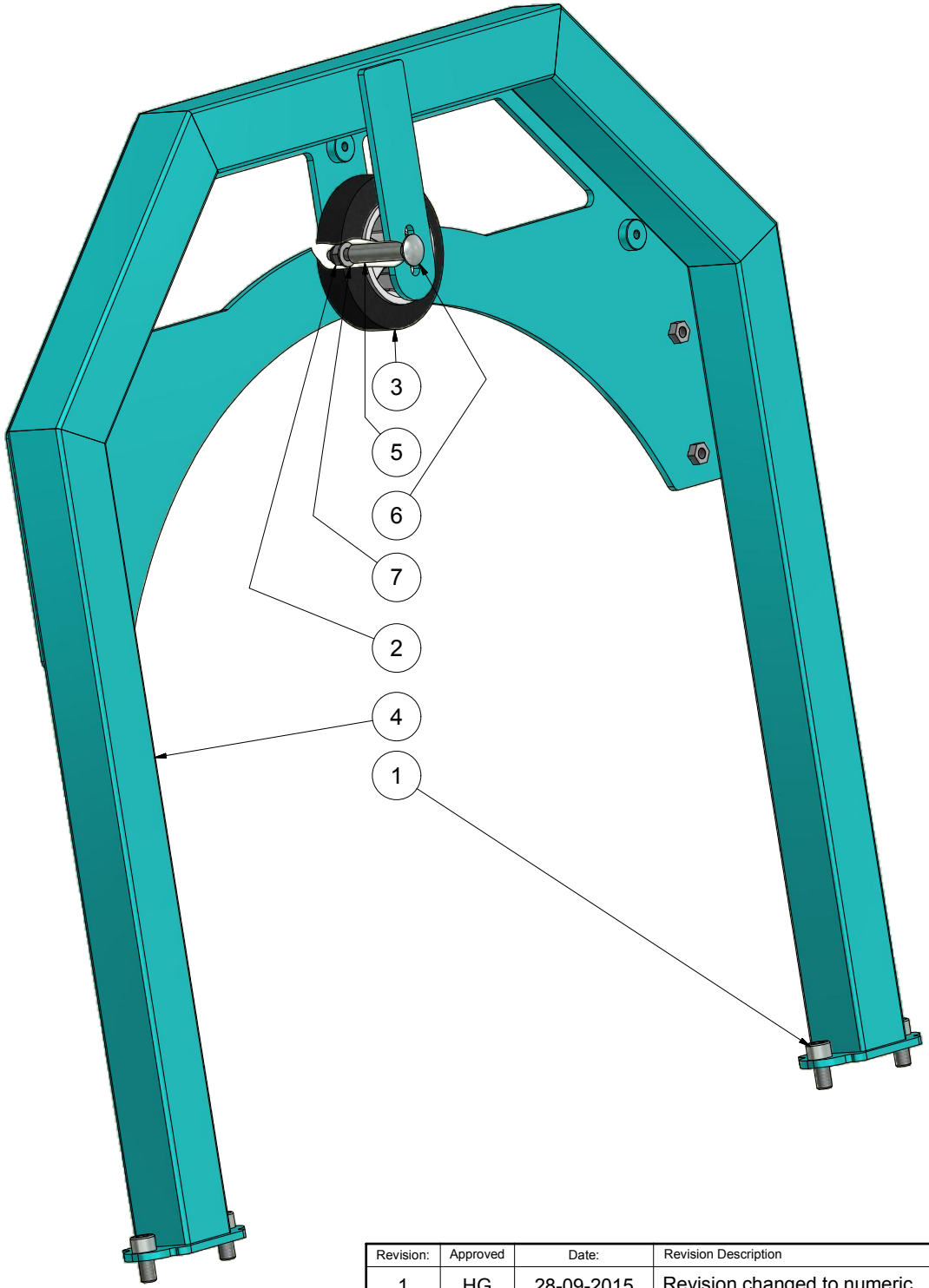

Parts List			
ITEM	QTY	PART NUMBER	DESCRIPTION
1	4	10210020	Hexagon cylinder head M10x20 FZB
2	1	17908000	Self-locking nut M8 FZB
3	1	19003	Wheel for through put drum
4	1	190575	Gable for Ø600
5	1	190775	Bushing for wheel
6	1	64408070	Cup head square neck bolt M8x70 FZB
7	1	82108000	Chamfered Washer M8 FZB

Break all edges

Revision:	Approved	Date:	Revision Description
1	HG	28-09-2015	Revision changed to numeric

The document is strictly confidential and can in no account be copied or discloses to any third person.

HEDENSTED GRUPPEN

HEDENSTED GRUPPEN A/S

Scale: 1 : 3	Not specificed tolerance according to: DS/ISO 2768-m		Sheet size: A3
	Surface properties:		Sheet: 1 /1
Part No.: 190418	Material:		
Description 1: Gable for loading lid			
Description 2:			

Parts List			
ITEM	QTY	PART NUMBER	DESCRIPTION
1	4	10206010	Hexagon cylinder head M6x10 FZB
2	1	11410025	Hexagon bolt M10x25 FZB
3	4	11412035	Hexagon bolt M12x35 FZB
4	2	11420140	Hexagon bolt M20x140 FZB
5	6	1520000	Nut M20 FZB
6	4	190284	Wheel for bodydrum
7	2	190419	Support wheel assembly
8	4	190521	Washer for sprocket
9	2	190522	Tension sprocket16B1 Z14
10	1	190540	Stand for body drum
11	1	190565	Frame for drum

Parts List			
ITEM	QTY	PART NUMBER	DESCRIPTION
12	4	190610	Shaft with flange
13	6	197350	Machine base M75-12-070
14	3	222380	End cap 50x50
15	2	473038	Bearing 6204 2 RS1
16	2	473093	Y-Bearing Ø40 SY 40 TF
17	4		Chamfered Washer M12 FZB
18	4	82120000	Chamfered Washer M20 FZB
19	8	88720100	Shim washer Ø20x28x1,0
20	2	89847000	Seeger ring for bore Ø47 din 472
26	6	1512000	Nut M12 FZB

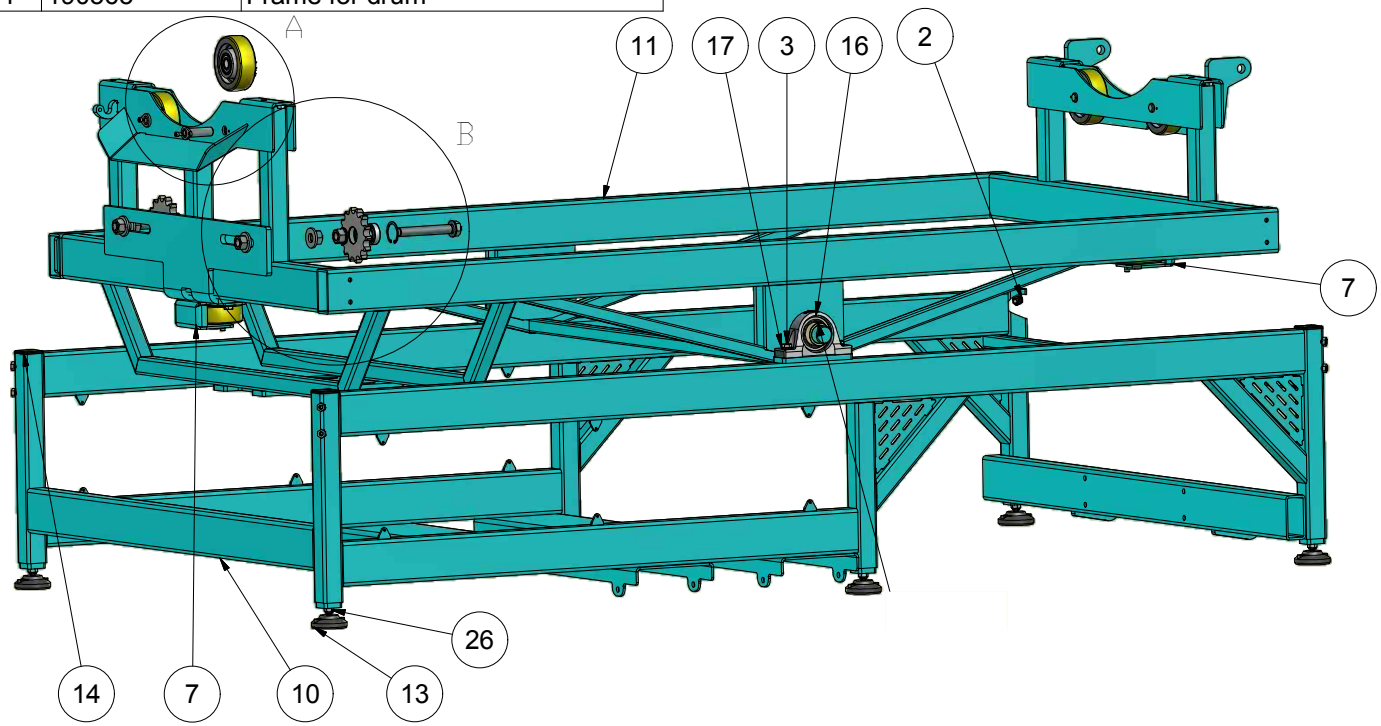

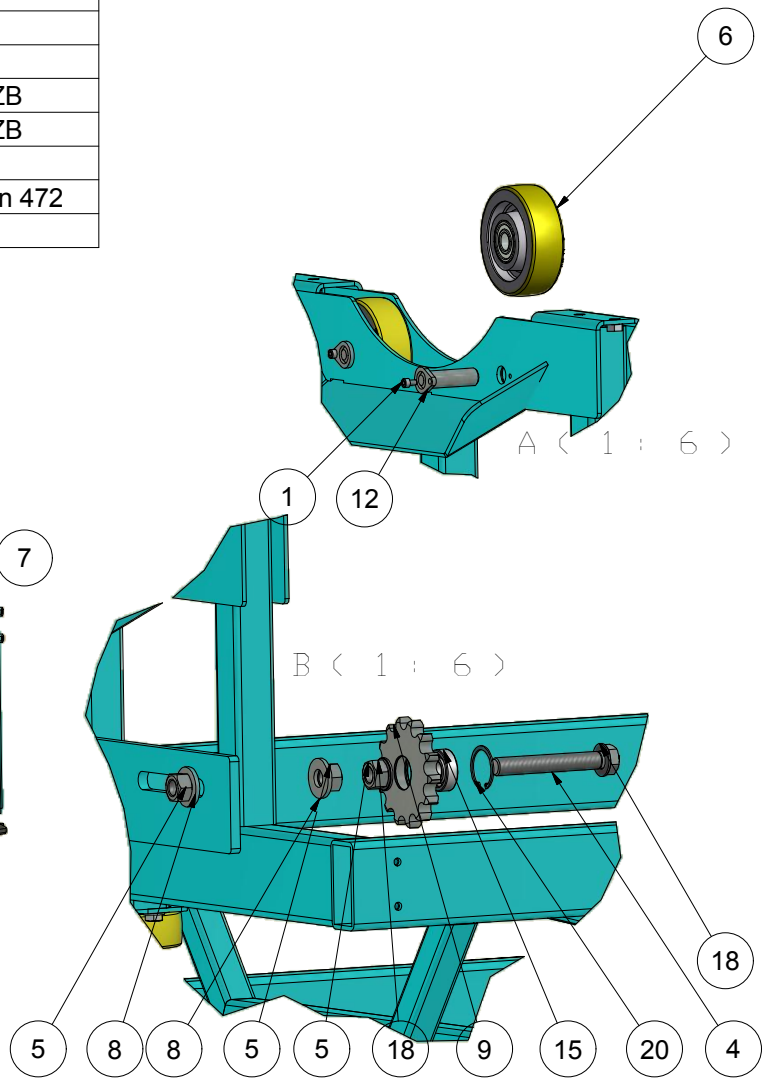

Break all edges

Revision:	Approved	Date:	Revision Description
1	HG	26/01/2016	nut M12 added

The document is strictly confidential and can in no account be copied or discloses to any third person.

HEDENSTED GRUPPEN A/S

HEDENSTED GRUPPEN

Scale: 1 : 12

Not specificed tolerance according to: DS/ISO 2768-m

Sheet size: A3

Surface properties:

Sheet: 1 /1

Part No.: 190421

Material:

Description 1: Frame assembly for drum

Description 2:

Parts List			
ITEM	QTY	PART NUMBER	DESCRIPTION
1	1	10206010	Hexagon cylinder head M6x10 FZB
2	2	11412025	Hexagon bolt M12x25 FZB
3	1	190284	Wheel Ø125xØ20x46
4	1	190600	Sheet part 19
5	1	190610	Shaft with flange
6	2	82112000	Washer M12 FZB
7	2	88720100	Shim washer Ø20x28x1,0

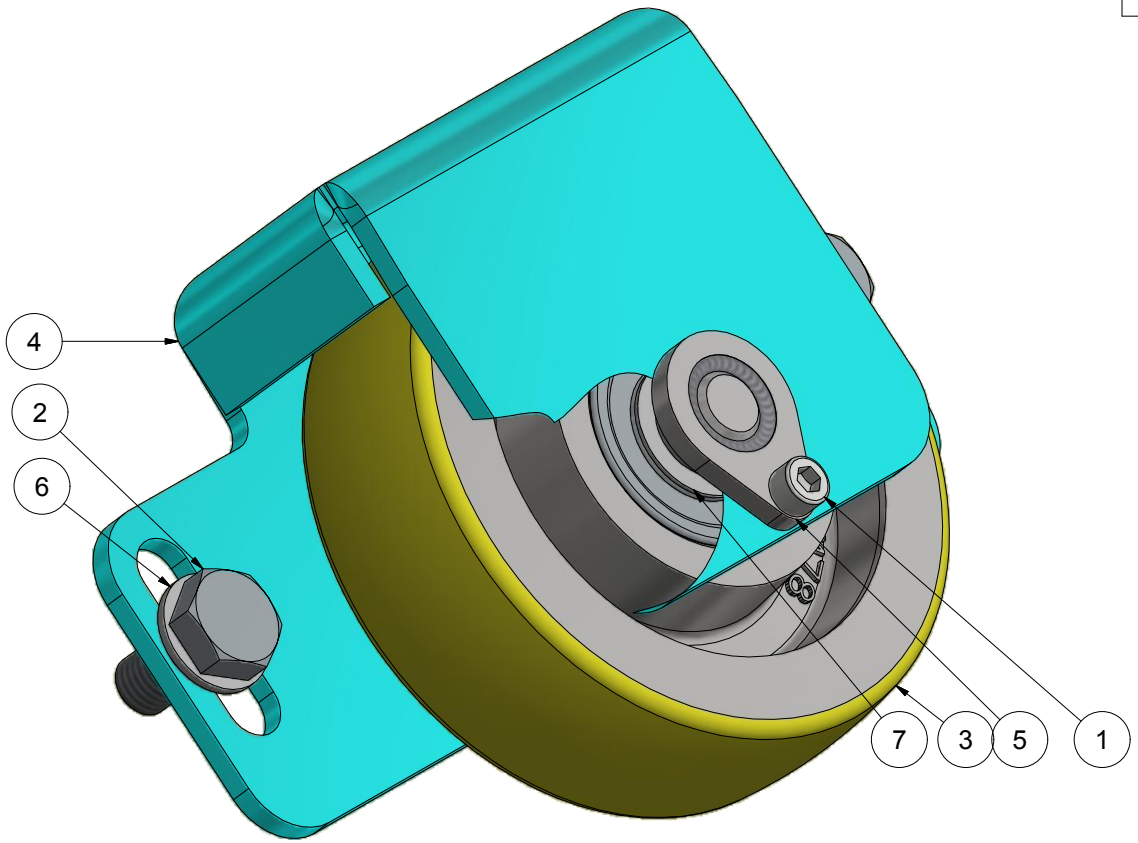

Break all edges

Revision:	Approved	Date:	Revision Description
1	HG	28-09-2015	Revision changed to numeric

The document is strictly confidential and can in no account be copied or discloses to any third person.

HEDENSTED GRUPPEN A/S

HEDENSTED GRUPPEN

Scale: 1:1

Not specificed tolerance according to: DS/ISO 2768-m

Sheet size: A3

Surface properties:

Sheet: 1 /1

Part No.: 190419

Material:

Description 1: Support wheel assembly

Description 2:

Parts List			
ITEM	QTY	PART NUMBER	DESCRIPTION
1	1	11410025	Hexagon bolt M10x25 FZB
2	4	11416060	Hexagon bolt M16x60 FZB
3	1	190517	Washer for gear
4	1	190518	Bushing for sprocket
5	1	190520	Sprocket F/gear Z32-1Inch Ø40
6	1	190530	Gearmotor for body drum Ø150cm EU
7	3,7 m	190580	Roller chain 16B1
8	1	190582	Chain connection link 16B
9	2	190595	Sheet part 18
10	4	82116000	Chamfered Washer M16 FZB

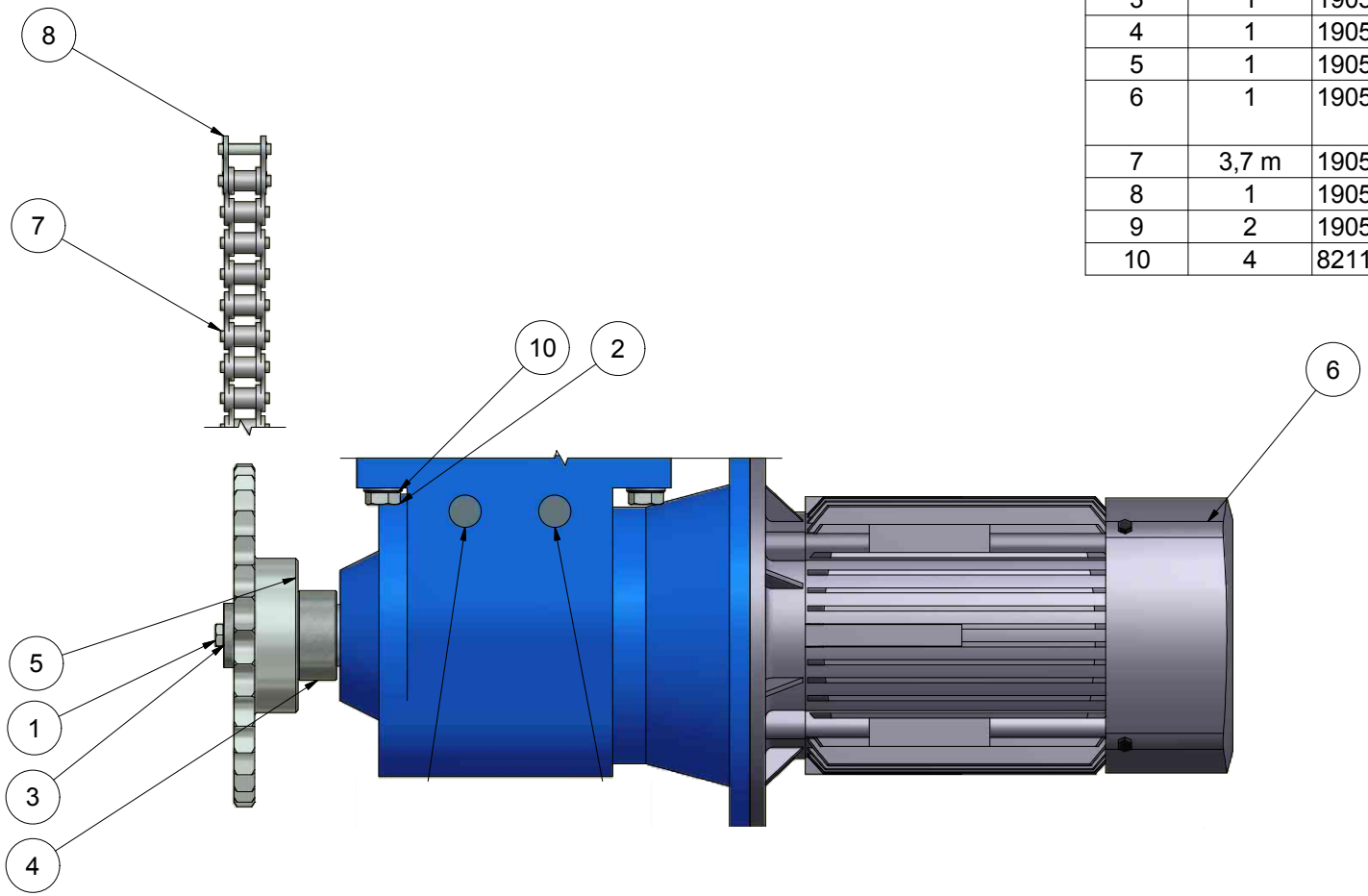

Break all edges

Revision:	Approved	Date:	Revision Description
1	HG	28-09-2015	Revision changed to numeric

The document is strictly confidential and can no account be copied or discloses to any third person.

HEDENSTED GRUPPEN A/S

HEDENSTED GRUPPEN

Scale: 1:4

Not specificed tolerance according to: DS/ISO 2768-m

Sheet size: A3

Surface properties:

Sheet: 1 /1

Part No.: 190519

Material:

Description 1: Gearmotor complete f.body drum

Description 2:

Parts List			
ITEM	QTY	PART NUMBER	DESCRIPTION
1	1	16075	Motor IEC 132 B5 5,5kw 1500 O
2	1	16070	Gear AMP 80/2 Ø40 1:19,4

Product data/Specyfikacja:
Gear/przekładnia: STM - AMP 80 / 2
Ratio/przełożenie: 1/19,4
Flange/flansza: IEC 132 B5
Shaft/wałek: ø40 h6
Mounting POS/pozycja montażowa: M2 (Oil level)
Motor/silnik: 5,5kW 1400rpm IEC132 B5
Terminal board position/pozycja puszki ele.: POS 4

- The motor runs with frequency converter

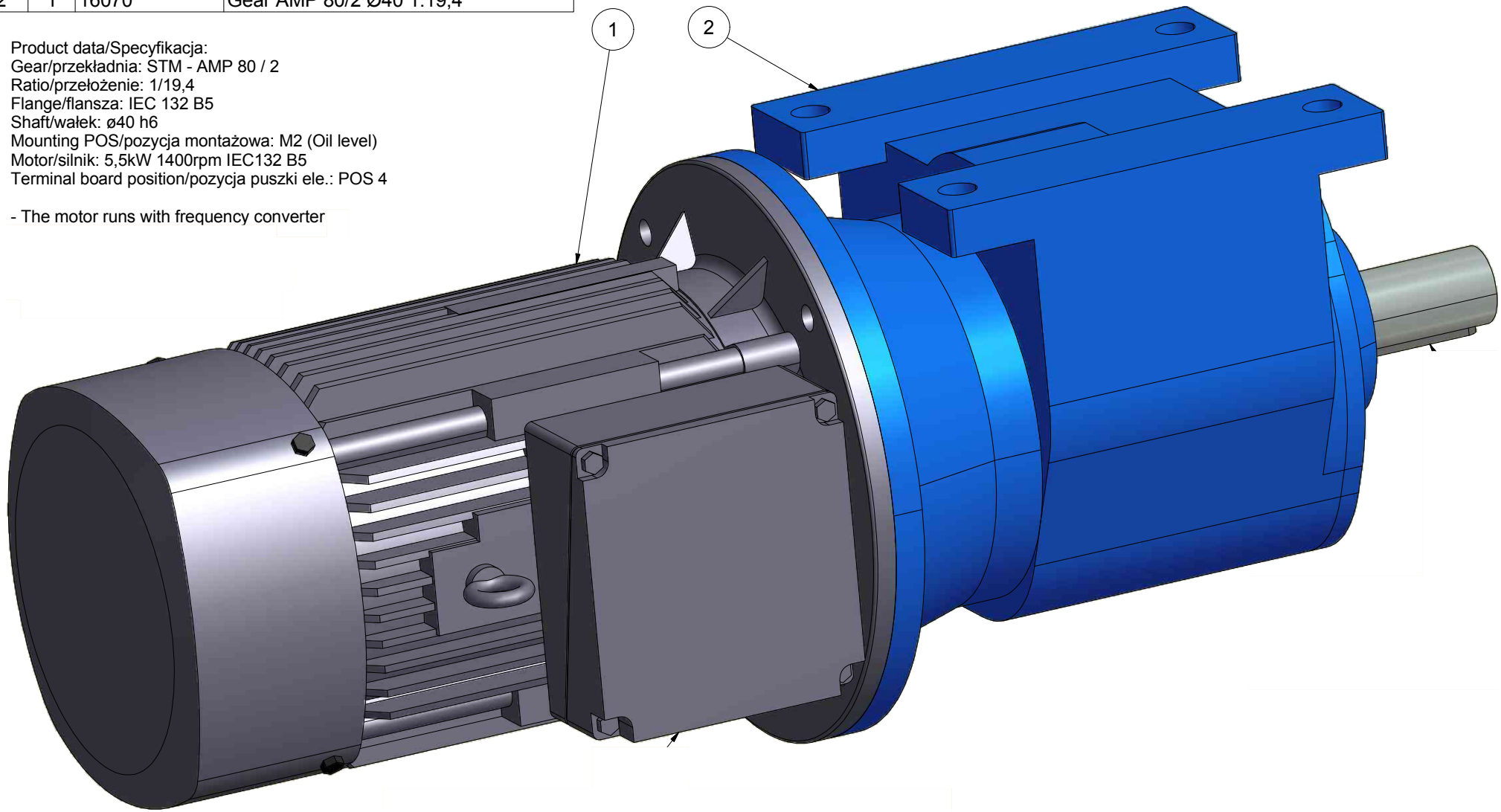

Break all edges

Revision:	Approved	Date:	Revision Description
1	HG	28-09-2015	Revision changed to numeric

The document is strictly confidential and can in no account be copied or discloses to any third person HEDENSTED GRUPPEN A/S

HEDENSTED GRUPPEN

Scale: 1 : 2	Not specificed tolerance according to: DS/ISO 2768-m		Sheet size: A3
	Surface properties:		Sheet: 1 /1
Part No.: 190530	Material:		
Description 1: Gearmotor for body drum Ø150cm EU			
Description 2: 5.5kW 1500rpm 1:19,4 3x400V			

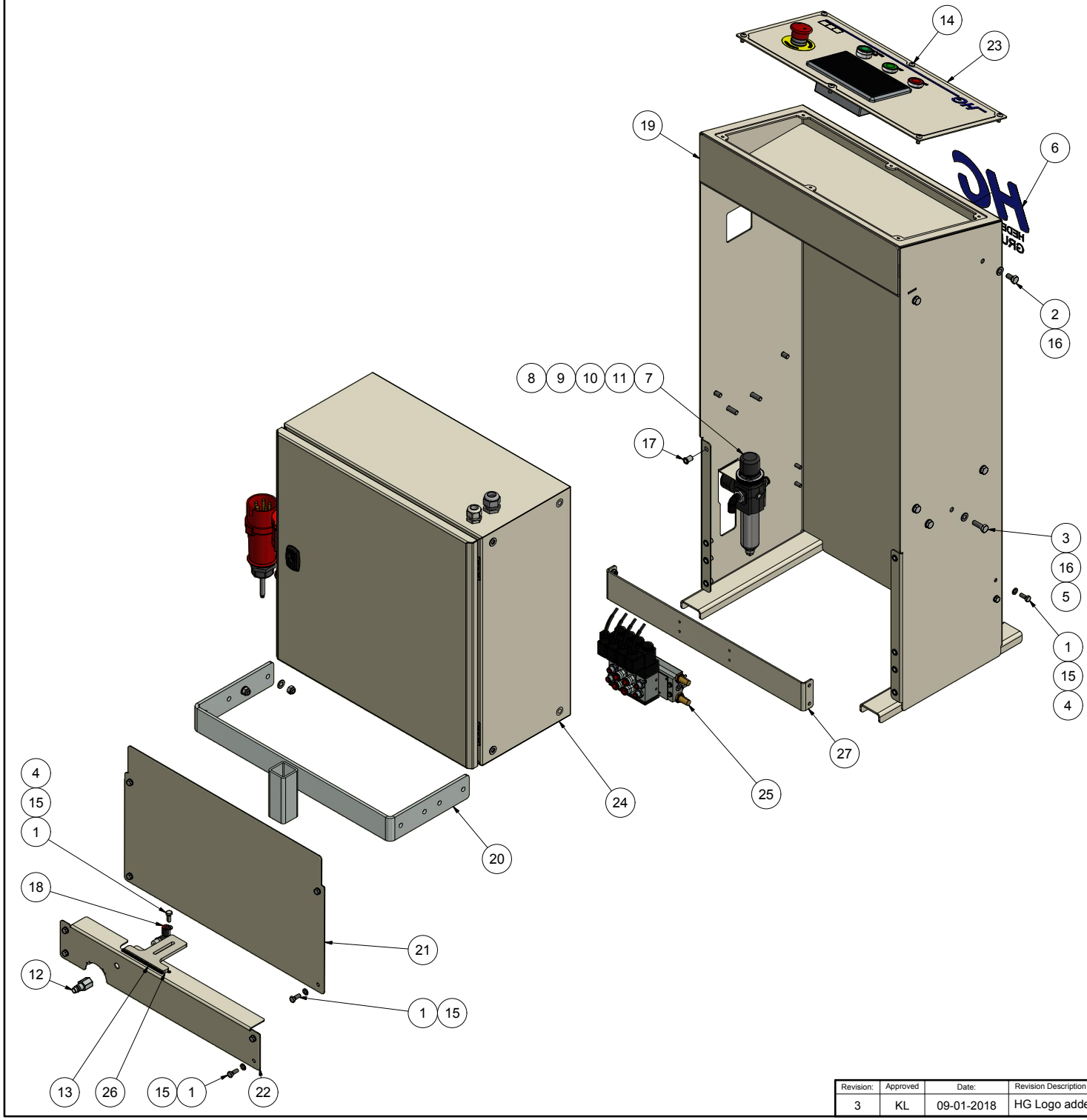

PARTS LIST			
ITEM	QTY	PART NUMBER	DESCRIPTION
1	13	11406016	Hexagon bolt M6x16 FZB
2	8	11408016	Hexagon bolt M8x16 FZB
3	4	11408025	Hexagon bolt M8x25 FZB
4	5	17906000	Self-locking nut M6 FZB
5	12	17908000	Self-locking nut M8 FZB
6	1	19767	HG Logo - big 205x108mm
7	1	210178	Regulator with filter 1/4" 0,3-10 bar (AutoDrain)
8	1	215530	Nut, panel mount 4248-01
9	1	215550	Gauge 0-10 bar 1/8" Ø40
10	1	215934	Straight connector Ø8 x 1/4"
11	1	216537	Elbow swivel Ø8 x 1/4"
12	1	217040	Quick release coupling Plug 1/4" female
13	0,1 m	423431	Edge protection strip
14	6	76006012	Buttonhead bolt M6x12 FZB
15	18	82106000	Washer M6 FZB
16	24	82108000	Washer M8 FZB
17	8	9306014	Blindnut rivet M6x14,5 (0,5-2,3)
18	1	M101466	Elbow swivel Ø8 x 1/4"t
19	1	M102515	Stand for controls, ø150 bodydrum
20	1	M102516	Transport bracket for stand
21	1	M102517	Top coverplate for stand
22	1	M102518	Bottom coverplate for stand
23	1	M102521	Control board ø150cm bodydrum
24	1	M102522	Electric box for ø150 bodydrum
25	1	M102636	Valve Assembly
26	1	M102637	Fork
27	1	M102640	Plate for Air Components

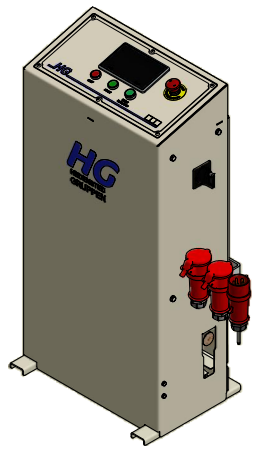

Break all edges

Revision:	Approved	Date:	Revision Description
3	KL	09-01-2018	HG Logo added

This document is the property of HEDENSTED GRUPPEN A/S. It must not be copied or disclosed to third parties without written consent.

HEDENSTED GRUPPEN

Scale: 1 : 5	Not specified tolerance according to: DS/ISO 2768-m	Sheet size: A2
	Surface properties: No	Sheet: 1 /1
Part No.: M102513	Material:	

Description 1: Stand for controls assembly, ø150 bodydrum

Description 2: Model 2017

PARTS LIST			
ITEM	QTY	PART NUMBER	DESCRIPTION
1	1	600100	Push button Emergency stop
2	1	600345	Push button red 1NC XB4BA42
3	1	600350	Push button green/light 1NO+1NC XB4BW33B5
4	1	600375	Switch block ZB4BZ104 2NC
5	1	600788	Push button green 1NO XB4BA31
6	1	600924	Panel, touch 5" X2 Base 5 - F2
7	1,2 m	601005	Cable JZ 12x0,75mm² PVC
8	1	M102514	Plate for controlboard ø150 bodydrum
9	1	M102519	Label for ø150 bodydrum model 2017

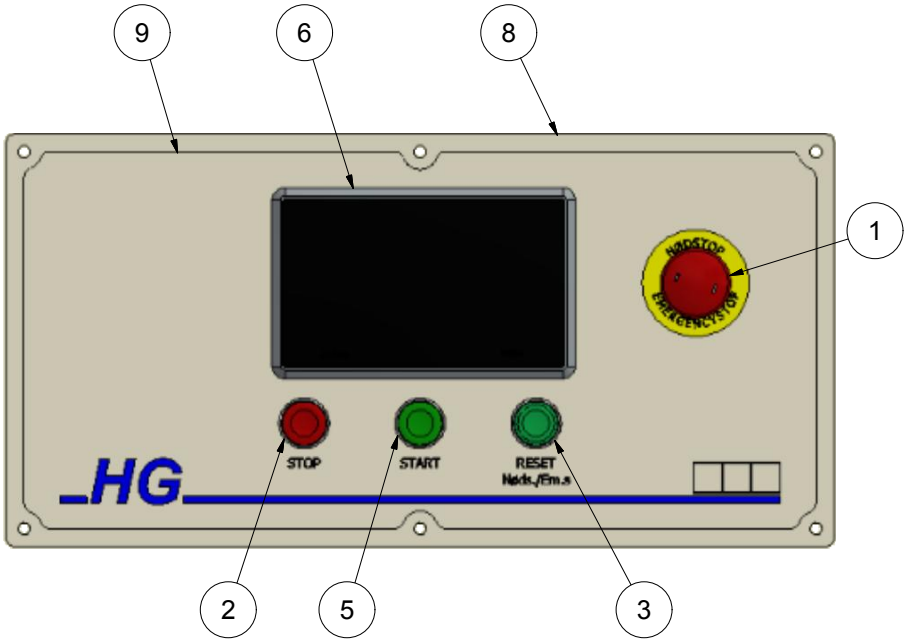

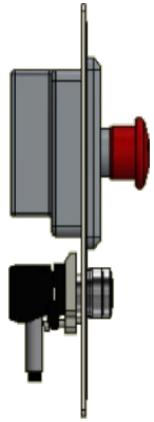

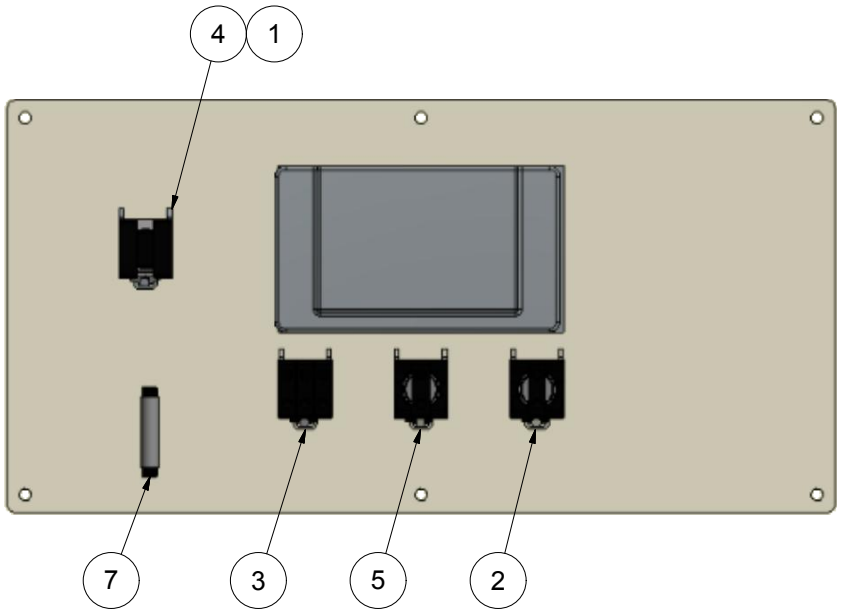

Break all edges

Revision:	Approved	Date:	Revision Description
1	MBO	28-04-2017	Made

The document is strictly confidential and may in no account be copied or discloses to any third person.

HEDENSTED GRUPPEN A/S

HEDENSTED GRUPPEN

Scale: 1 : 3	Not specificed tolerance according to: DS/ISO 2768-m		Sheet size: A3
	Surface properties: No		Sheet: 1 /1
Part No.: M102521	Material:		
Description 1: Control board ø150cm bodydrum			
Description 2: Model 2017			

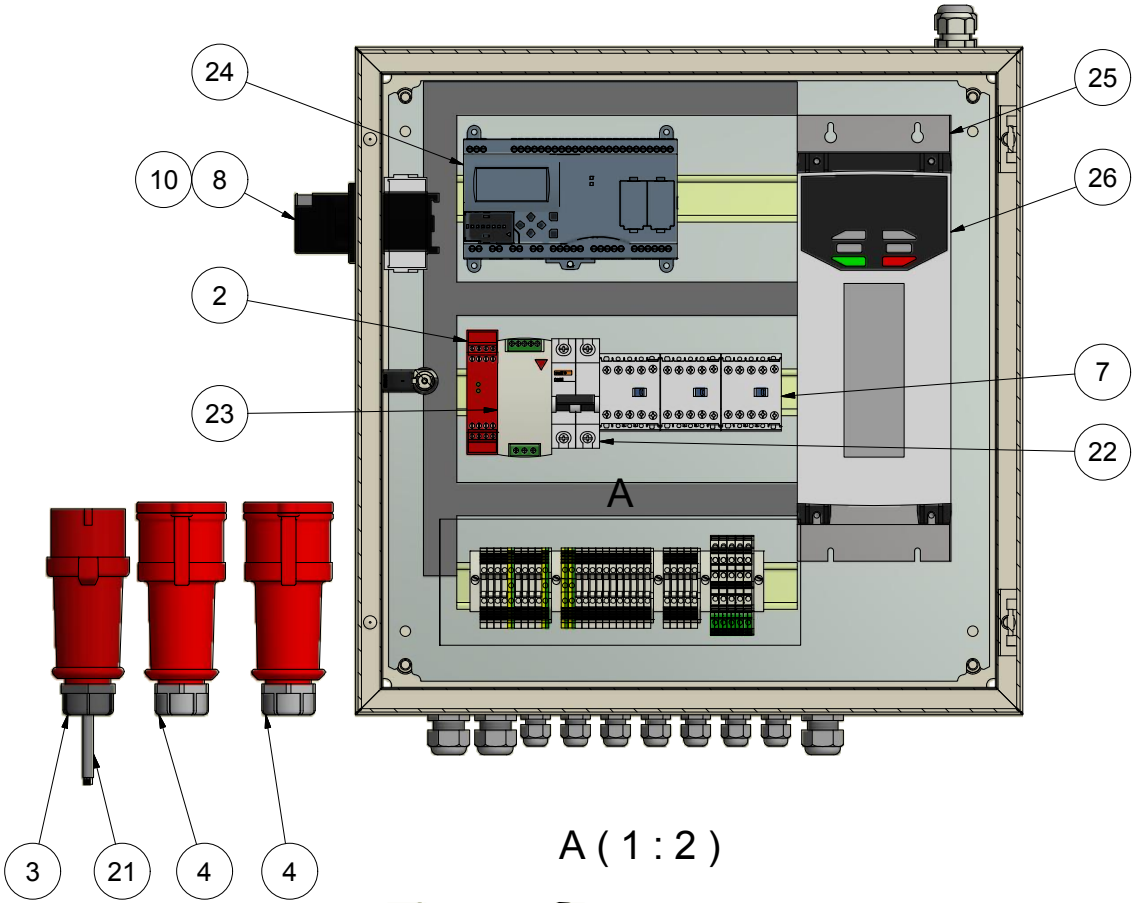

A (1 : 2)

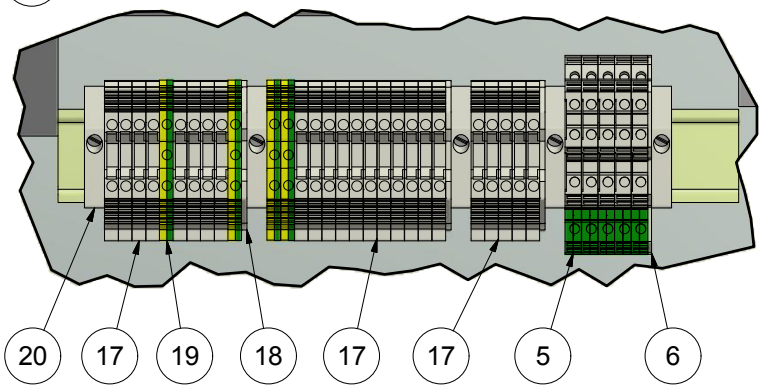

PARTS LIST

ITEM	QTY	PART NUMBER	DESCRIPTION
1	1	16360	Electric mounting ø150cm drum
2	1	206731	Safety controller 24VAC/DC Cat3
3	1	50171	CEE Plug male 5P/16A/400V Phase inverter
4	2	50175	CEE Plug female 5P/16A/400V
5	5	600105	Terminal block DLD 2,5 PE
6	1	600114	End plate AP-DLD 2,5/PE
7	3	600282	Contactor LP1K0901B 9A 3NO-1NC
8	1	600358	Main switch VBF-01 20A 3P Black
9	1	600359	Main switch zero terminal VZ-11
10	1	600369	Main switch ground terminall VZ-14
11	1	600455	Cabel gland M20 Ø5-12
12	8	600460	Cable gland M16 Ø2,5-8
13	5	600465	Cable gland M25 Ø7-14
14	8	600470	Cable gland nut polyamid M16
15	1	600475	Cable gland nut polyamid M20
16	5	600480	Cable gland nut polyamid M25
17	24	600550	Terminal block WDU_2,5
18	3	600555	End plate WAP 2,5-10
19	4	600585	Terminal block WPE 2,5
20	5	600590	End bracket EW 35
21	12,0 m	600640	Cable JZ 5x2,5mm² PVC
22	1	601095	Automatic fuse 10A C 1P+N
23	1	601275	Power supply 1P 24V 2,5A
24	1	M102121	PLC Idec SmartAxis - FT1A-B40RSA
25	1	M102511	Low Leak filter for M200-04
26	1	M102512	Freq. inverter 5.5kW 3x400V Emerson
27	1	M102626	Box metal 500x500x250

Revision:	Approved	Date:	Revision Description
3	KKS	09-11-2017	Cable glands changed

Break all edges

The document is strictly confidential and may not be in no account be copied or discloses to any third person HEDENSTED GRUPPEN A/S

HEDENSTED GRUPPEN

Scale: 1:4	Not specificed tolerance according to: DS/ISO 2768-m		Sheet size: A3
	Surface properties: No		Sheet: 1 /2
Part No.: M102522	Material:		
Description 1: Electric box for ø150 bodydrum			
Description 2: Model 2017			

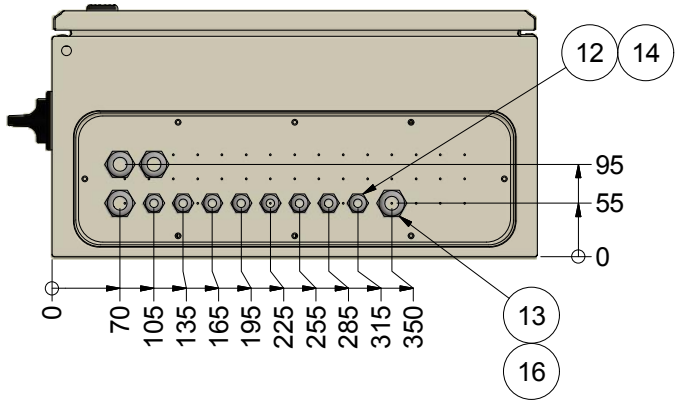

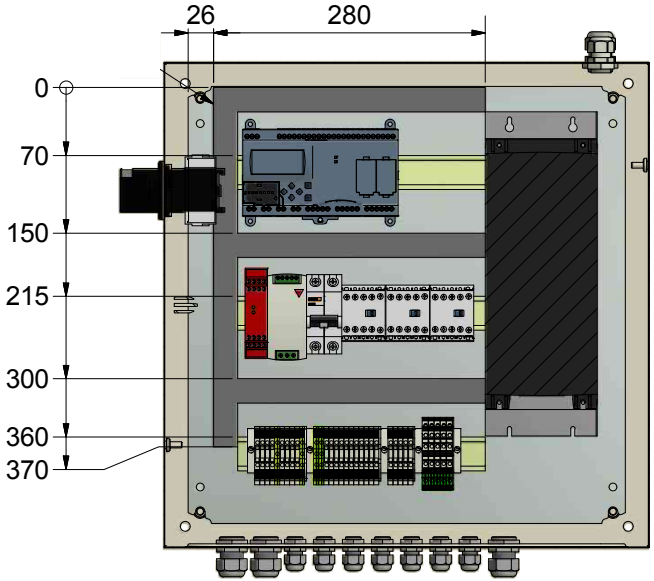

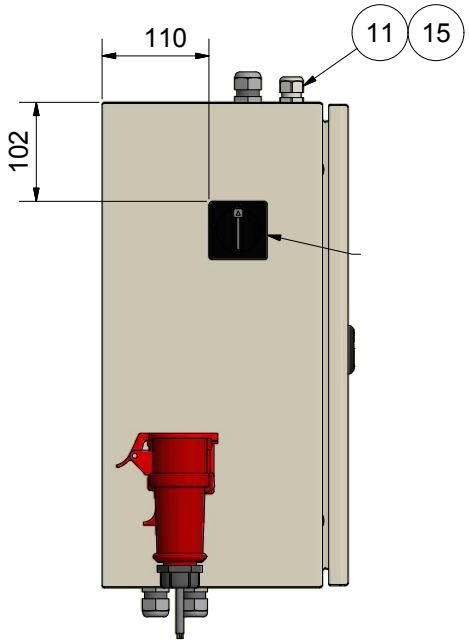

Terminal assignment (1 : 2)

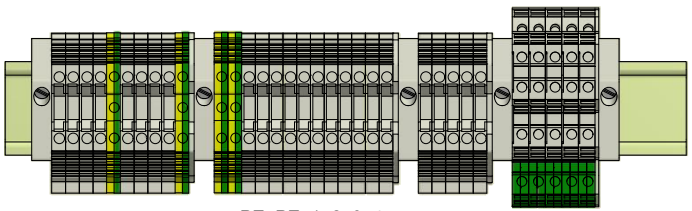

1U1, 1V1, 1W1, 1N1, PE.

2U1, 2V1, 2W1, 2N1, PE.

PE, PE, 1, 2, 3, 4, 5, 6, 7, 8, 9, 10, 11

I2, I3, I4, +, -

Q0, Q1, Q2, Q3, Q4

Break all edges

Revision:	Approved	Date:	Revision Description
3	KKS	09-11-2017	Cable glands changed

The document is strictly confidential and may not in no account be copied or disclosed to any third person.
HEDENSTED GRUPPEN A/S

HEDENSTED GRUPPEN

Scale: 1:4	Not specificed tolerance according to: DS/ISO 2768-m		Sheet size: A3
	Surface properties: No		Sheet: 2 /2
Part No.: M102522	Material:		
Description 1: Electric box for ø150 bodydrum			
Description 2: Model 2017			

PARTS LIST			
ITEM	QTY	PART NUMBER	DESCRIPTION
1	4	11104040	Hexagon bolt M4x40 FZB
2	4	17904000	Self-locking nut M4 FZB
3	4	195396	Valve 5/2 1/4" 24VDC/Spring
4	1	195397	Manifold V51 for 5x5/2 valves
5	1	195399	Blanking plate for V51 manifold
6	4	215185	Cable w. elbow plug 22mm 3P 1M 250v
7	4	215930	Straight connector Ø6 x 1/4"
8	5	215934	Straight connector Ø8 x 1/4"
9	3	216743	Plug 1/4" inside hex
10	2	216797	Filter sintered 1/4"
11	8	82104000	Washer M4 FZB

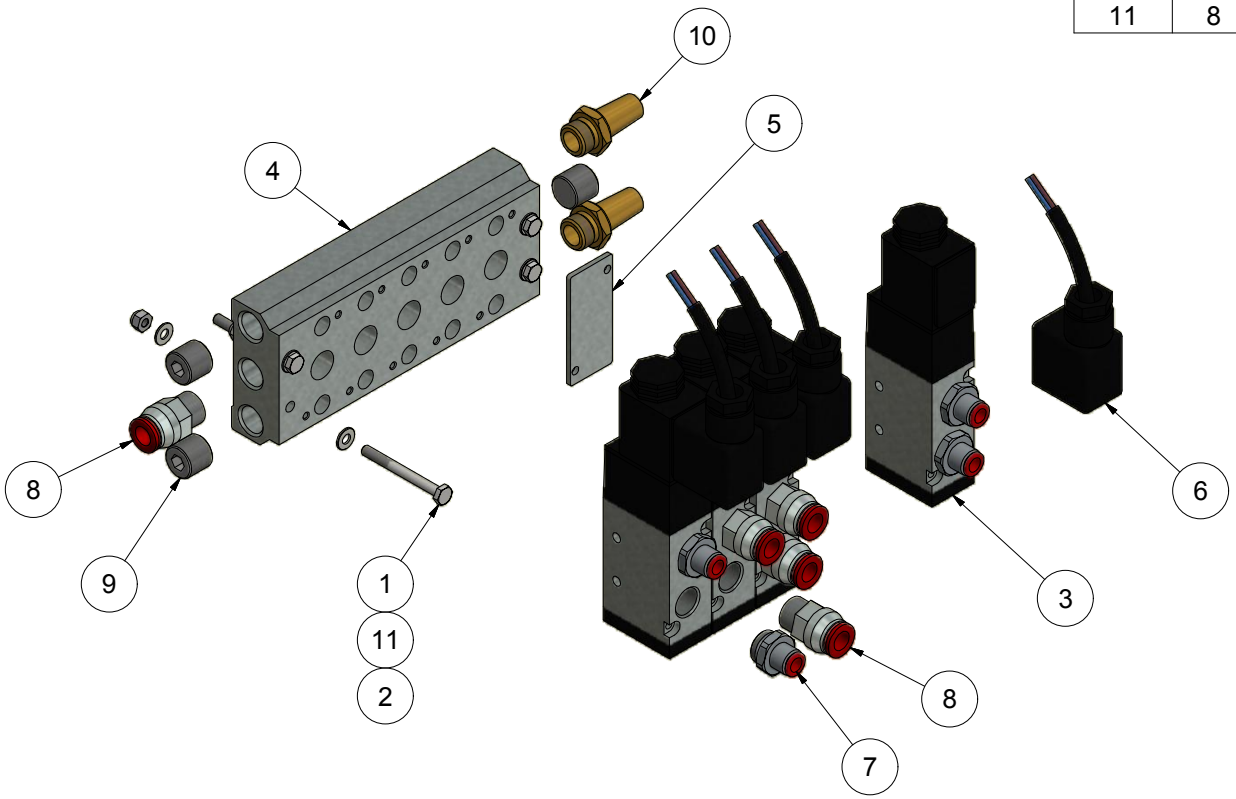

Break all edges

Revision:	Approved	Date:	Revision Description
1	MBO	28-04-2017	Made

The document is strictly confidential and may not be in no account be copied or discloses to any third person.
HEDENSTED GRUPPEN A/S

HEDENSTED GRUPPEN

Scale: 1 : 2	Not specificed tolerance according to: DS/ISO 2768-m	Sheet size: A3
	Surface properties: No	Sheet: 1 /1
Part No.: M102636	Material:	
Description 1: Valve Assembly		
Description 2:		

Customer: Hedensted Gruppen A/S

Project: Ø150 Bodydrum XL 2017

Hedensted Gruppen A/S
Vejlevej 15a
DK-8722 Hedensted
TLF: 75 89 12 44
FAX: 75 89 11 80

Index

Information D
21-08-2012 12:44:52

Declaration of incorporation E
20-02-2017 09:30:44

Main Circuit 1
23-08-2017 13:29:48

230VAC & 24VDC Control Circuit 2
13-06-2016 12:30:50

Emergency stop Circuit 3
22-02-2017 13:03:26

Frequency converter Control circuit 4
22-02-2017 11:50:14

PLC 5
22-02-2017 11:44:58

PLC Input X0 - X7 6
10-10-2017 10:08:04

PLC Input X10 - X17 7
07-06-2016 10:20:52

PLC Input X20 - X27 8
07-06-2016 10:20:52

PLC Output Y0 - Y7 9
22-02-2017 11:47:56

PLC Output Y10 - Y17 10
22-08-2017 13:52:58

PLC list 11
10-10-2017 10:21:36

Cable list 12
10-10-2017 10:21:36

Part list 14
10-10-2017 10:21:36

Information

WIRE IDENTIFICATION:

The wire is identified with the terminal number of the component.

WIRE COLOUR:

MAIN CIRCUIT:	Phase	Black
	Neutral	Light blue
DC CONTROL CIRCUIT:	24VDC	Dark blue
	0VDC	White

THE FOLLOWING COLOUR ID IS TAKEN FROM DS/EN 60757

BK BLACK
BN BROWN
RD RD
OG ORANGE
YE YELLOW
GN GREEN
BU BLUE
VT VIOLET
GY GREY
WH WHITE
PK PINK

ALL SYMBOLS USED IS TAKEN FROM DS/EN 166

DECLARATION OF INCORPORATION

Directive 2006/42/EF, Annex II, B

Manufacturer

Firm: VS AUTOMATIC A/S
Address: Ormhøjgårdvej 15
DK-8700 Horsens

Phone: +45 75 64 18 99
Fax: +45 75 64 18 09
Email: info@vs-automatic.dk

Herewith declares that

Component: Controlpanel
Type: Bodydrum XL 2017-01 Year of manufator: 2017

is intended to be incorporated into machinery or to be assembled with other machinery to constitude machinery covered by Directive 2006/42/EC

does therefor not in every respect comply with the provisions of this directive

does comply with the provisions of the following other EC directives

EC directives

EC machine directive 89/392/EEC, as per 91/386/EEC, 93/68/EEC, 93/44/EEC

EC low-voltage directives 73/23/EEC, as per 93/68/EEC, 93/465/EEC

EC EMC directive 89/336/EEC as per 92/31/EEC, 93/68/EEC, 93/465/EEC

Harmonized standards

EN60204-1 Safety of Machinery Electrical Equipment of Machines

EN60439-1 Low-voltage switchgear and controlgear assemblies part 1: Type-tested and partially type-tested assemblies

And furthermore declares that it is not allowed to put the machinery into service until the machinery into which it is to be incorporated or of which it si to be a component has been found and declarede to be in conformity with the provisions of Directive 98/37/EC and with national implementation legislation i.e. as a whole, including the machinery referred to in this declaration

Machine: Ø150 Bodydrum 2017
Machine No.:
Type: Year of manufactor: 2017
Manufactor: Hedensted Gruppen A/S

Indentification of signature:

Firm: VS AUTOMATIC A/S
Address: Ormhøjgårdvej 15
DK-8700 Horsens

Date: Signature

07-11-2017

Torben Steffensen

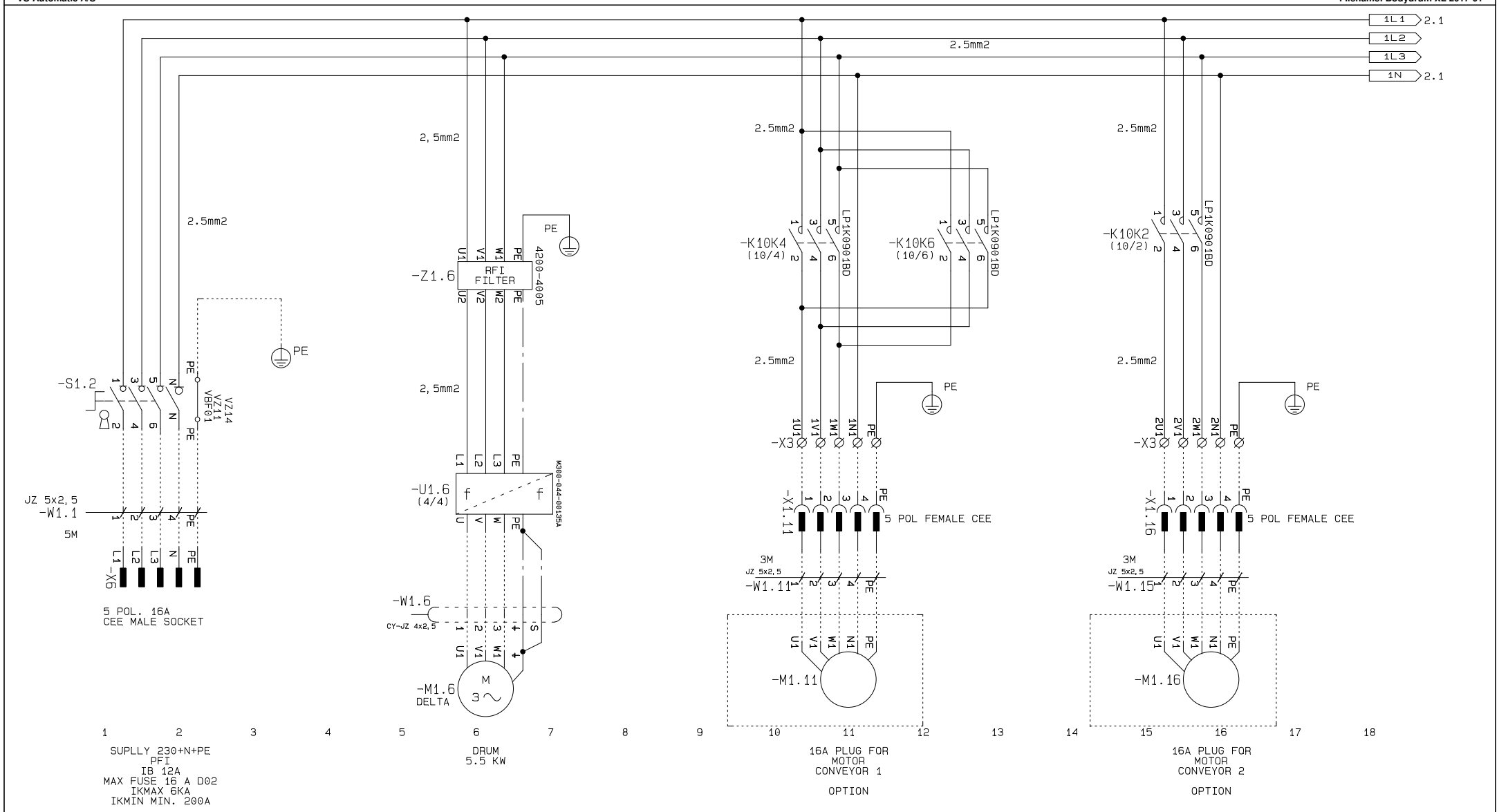
1L1
1L2
1L3
1N
2.1
2.5mm2
2, 5mm2
PE
-Z1.6
RFI FILTER
4200-4005
-S1.2
VZ14
VZ11
VBF01
JZ 5x2,5
-W1.1
5M
-X6
5 POL. 16A
CEE MALE SOCKET
-U1.6
(4/4)
M300-044-08135A
-W1.6
CY-JZ 4x2,5
-M1.6
DELTA
-K10K4
(10/4)
-K10K6
(10/6)
LP1K0901BD
-X3
-X1.11
5 POL FEMALE CEE
3M
-W1.11
-M1.11
-K10K2
(10/2)
-X1.16
-W1.15
-M1.16
SUPLLY 230+N+PE
PFI
IB 12A
MAX FUSE 16 A D02
IKMAX 6KA
IKMIN MIN. 200A
DRUM
5.5 KW
16A PLUG FOR
MOTOR
CONVEYOR 1
OPTION
16A PLUG FOR
MOTOR
CONVEYOR 2
OPTION

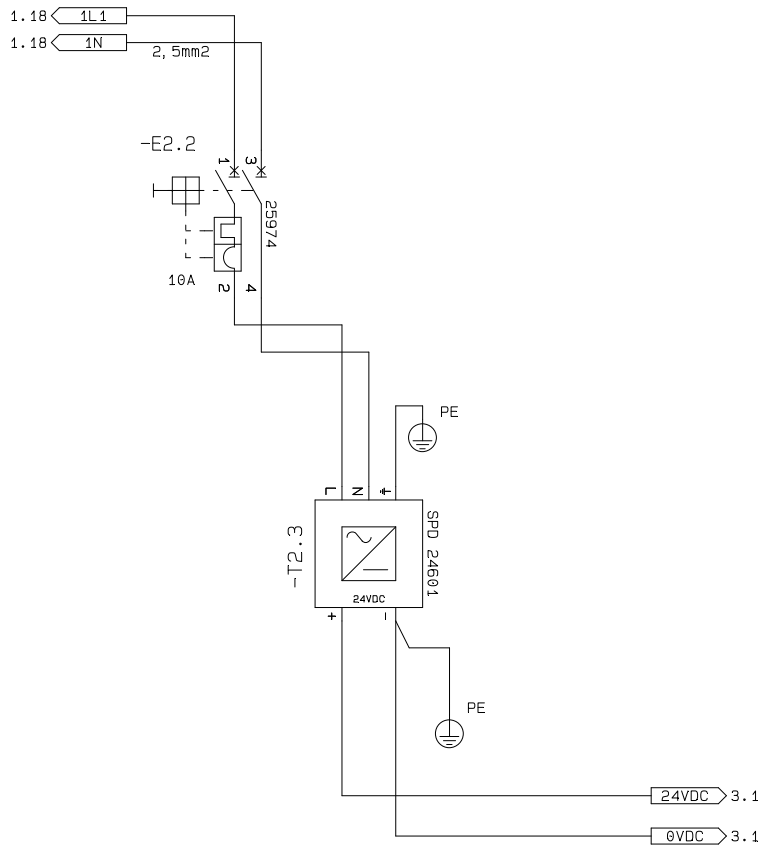

1 2 3 4 5 6 7 8 9 10 11 12 13 14 15 16 17 18

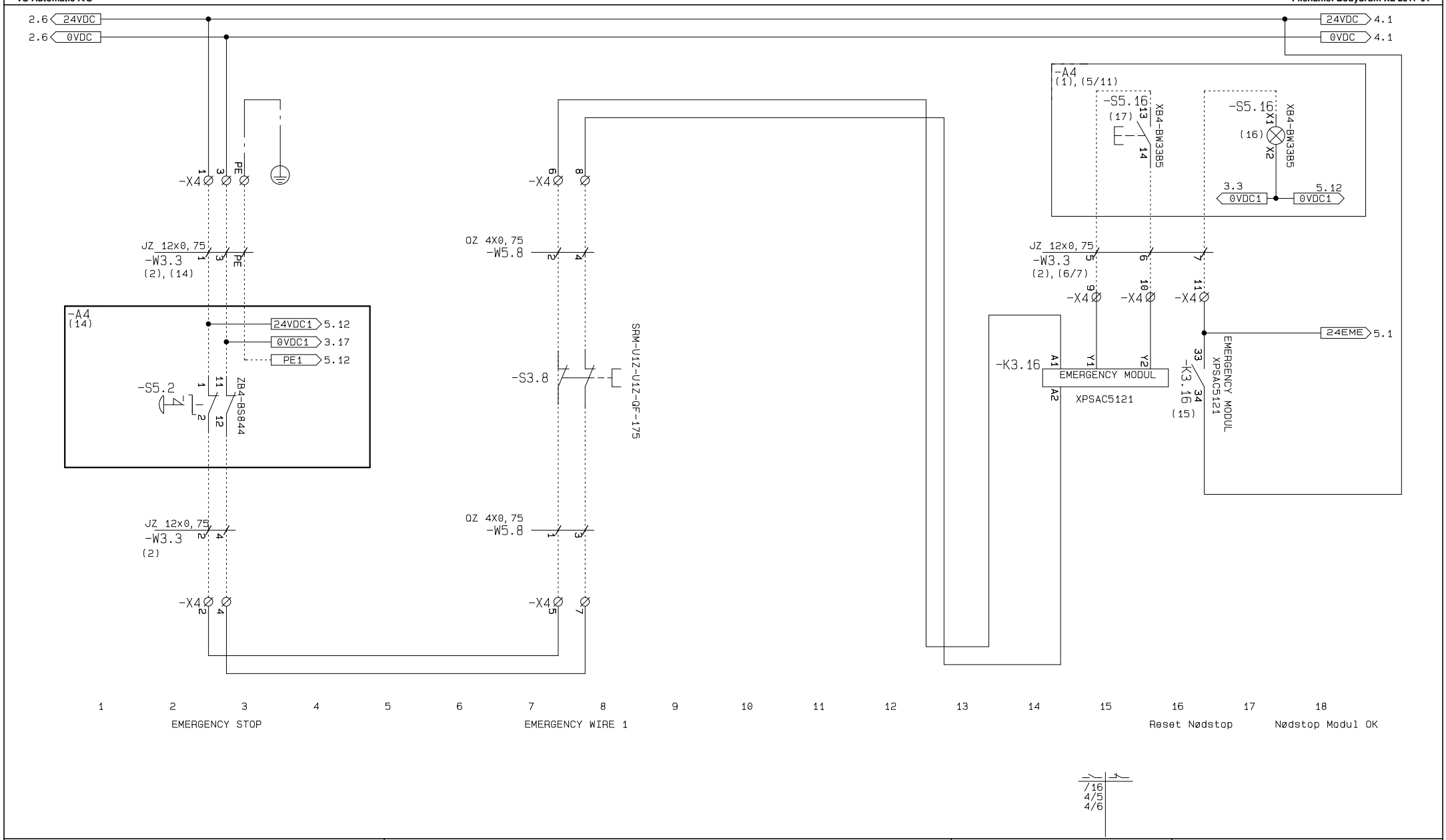

VS AUTOMATIC Tlf. 75 64 18 99 - vs-automatic.dk En del af TS-GRUPPEN - Danmarks stærkeste El & Energi Installatør	Customer: Hedensted Gruppen A/S	Designer: tbt	Case no:Bodydrum XL 2017-01
	Project: Ø150 Bodydrum 2017	Last prt: 07-11-2017	Page ref.:+A0
	Pagetitle: Emergency stop Circuit	Last changed: 22-02-2017	Page: 3 of 14

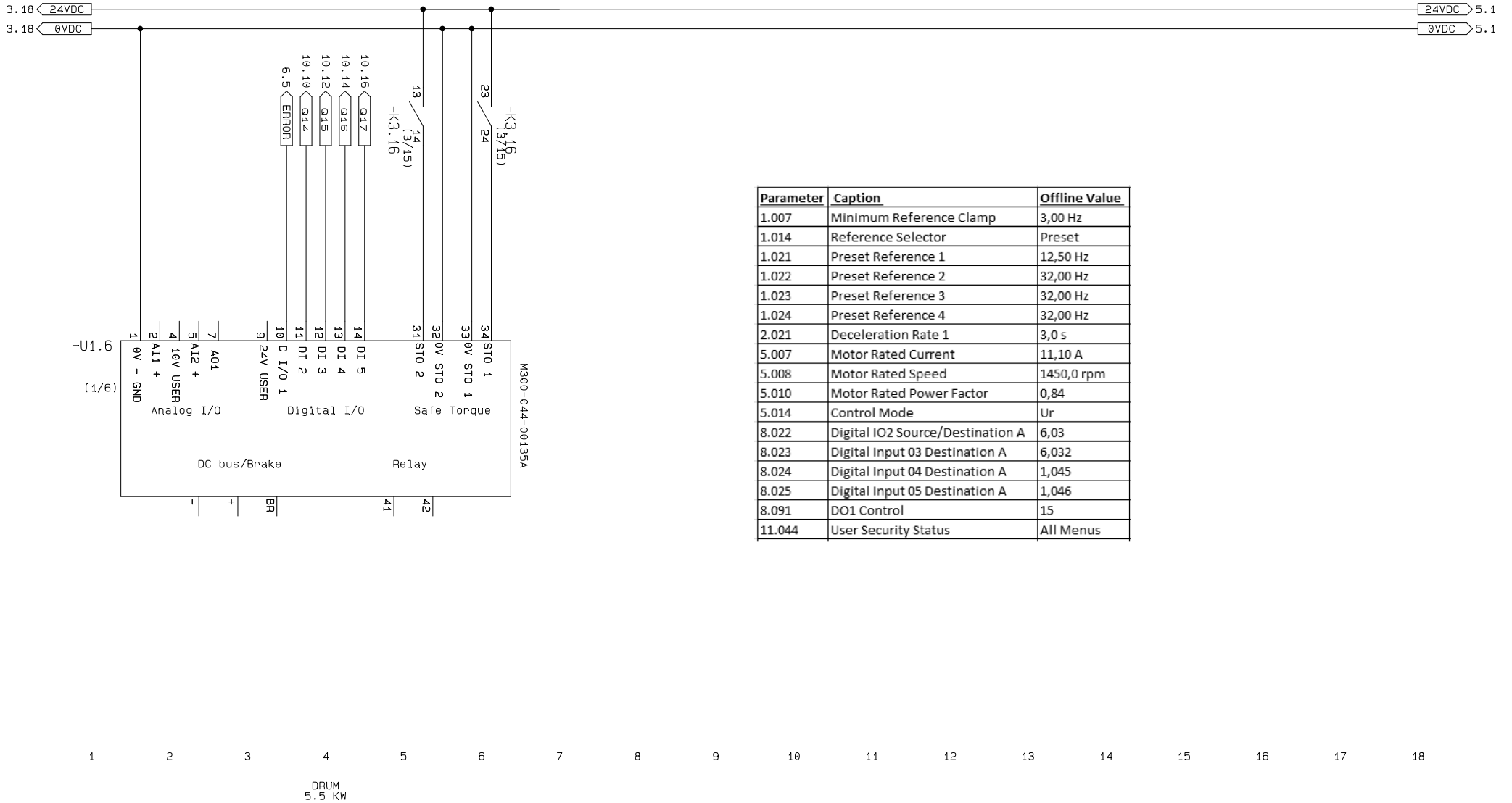

Parameter	Caption	Offline Value
1.007	Minimum Reference Clamp	3,00 Hz
1.014	Reference Selector	Preset
1.021	Preset Reference 1	12,50 Hz
1.022	Preset Reference 2	32,00 Hz
1.023	Preset Reference 3	32,00 Hz
1.024	Preset Reference 4	32,00 Hz
2.021	Deceleration Rate 1	3,0 s
5.007	Motor Rated Current	11,10 A
5.008	Motor Rated Speed	1450,0 rpm
5.010	Motor Rated Power Factor	0,84
5.014	Control Mode	Ur
8.022	Digital IO2 Source/Destination A	6,03
8.023	Digital Input 03 Destination A	6,032
8.024	Digital Input 04 Destination A	1,045
8.025	Digital Input 05 Destination A	1,046
8.091	DO1 Control	15
11.044	User Security Status	All Menus

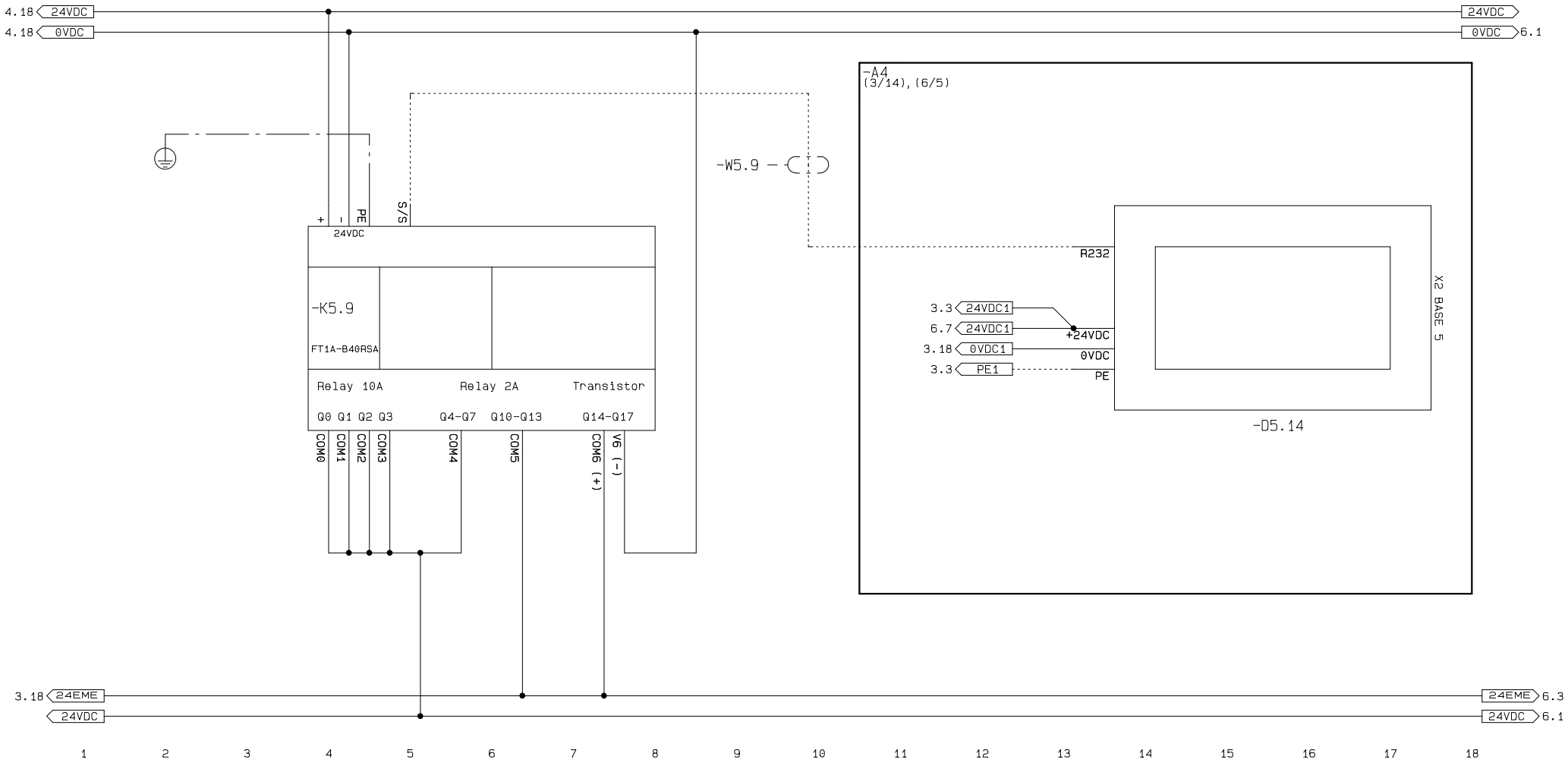
4.18 24VDC
4.18 0VDC
24VDC
0VDC 6.1
-A4
(3/14),(6/5)
-W5.9
+
-
PE
S/S
24VDC
-K5.9
FT1A-B40RSA
Relay 10A
Relay 2A
Transistor
Q0 Q1 Q2 Q3
Q4-Q7
Q10-Q13
Q14-Q17
COM0
COM1
COM2
COM3
COM4
COM5
COM6 (+)
V6 (-)
R232
3.3 24VDC1
6.7 24VDC1
3.18 0VDC1
3.3 PE1
+24VDC
0VDC
PE
X2 BASE 5
-D5.14
3.18 24EME
24VDC
24EME 6.3
24VDC 6.1
1
2
3
4
5
6
7
8
9
10
11
12
13
14
15
16
17
18

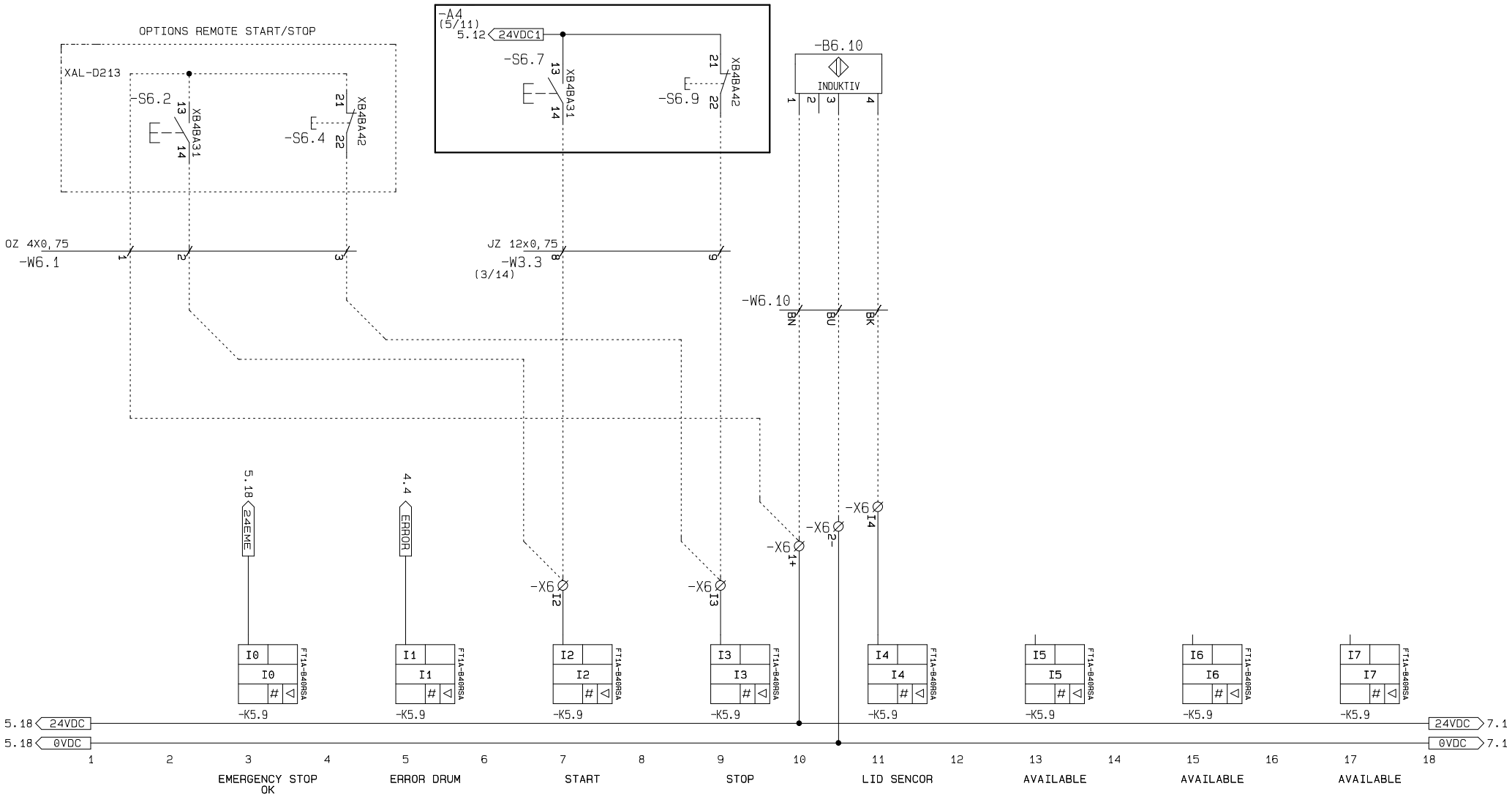
OPTIONS REMOTE START/STOP
XAL-D213
-S6.2
XB4BA31
-S6.4
XB4BA42
-A4
(5/11)
5.12
24VDC1
-S6.7
-S6.9
-B6.10
INDUKTIV
OZ 4X0,75
-W6.1
JZ 12x0,75
-W3.3
(3/14)
-W6.10
BN
BU
BK
5.18
24EME
4.4
ERROR
-X6
I0
I1
I2
I3
I4
I5
I6
I7
FT1A-B40RSA
-K5.9
5.18
24VDC
0VDC
7.1
EMERGENCY STOP OK
ERROR DRUM
START
STOP
LID SENCOR
AVAILABLE
AVAILABLE
AVAILABLE

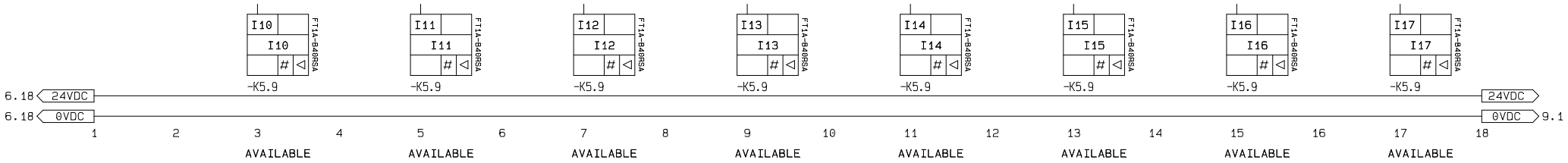
I10
I10
FT1A-B40RSA
-K5.9
I11
I11
FT1A-B40RSA
-K5.9
I12
I12
FT1A-B40RSA
-K5.9
I13
I13
FT1A-B40RSA
-K5.9
I14
I14
FT1A-B40RSA
-K5.9
I15
I15
FT1A-B40RSA
-K5.9
I16
I16
FT1A-B40RSA
-K5.9
I17
I17
FT1A-B40RSA
-K5.9
6.18 24VDC
6.18 0VDC
24VDC
0VDC
9.1
1 2 3 4 5 6 7 8 9 10 11 12 13 14 15 16 17 18
AVAILABLE
AVAILABLE
AVAILABLE
AVAILABLE
AVAILABLE
AVAILABLE
AVAILABLE
AVAILABLE

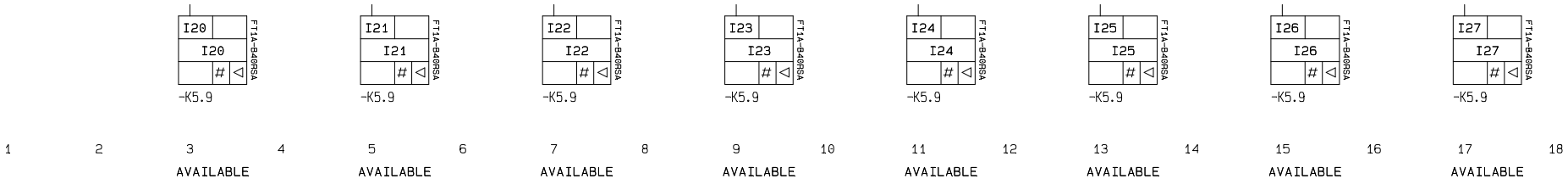
I20
I20
FT1A-B40RSA
-K5.9
I21
I21
FT1A-B40RSA
-K5.9
I22
I22
FT1A-B40RSA
-K5.9
I23
I23
FT1A-B40RSA
-K5.9
I24
I24
FT1A-B40RSA
-K5.9
I25
I25
FT1A-B40RSA
-K5.9
I26
I26
FT1A-B40RSA
-K5.9
I27
I27
FT1A-B40RSA
-K5.9
1 2 3 4 5 6 7 8 9 10 11 12 13 14 15 16 17 18
AVAILABLE
AVAILABLE
AVAILABLE
AVAILABLE
AVAILABLE
AVAILABLE
AVAILABLE
AVAILABLE

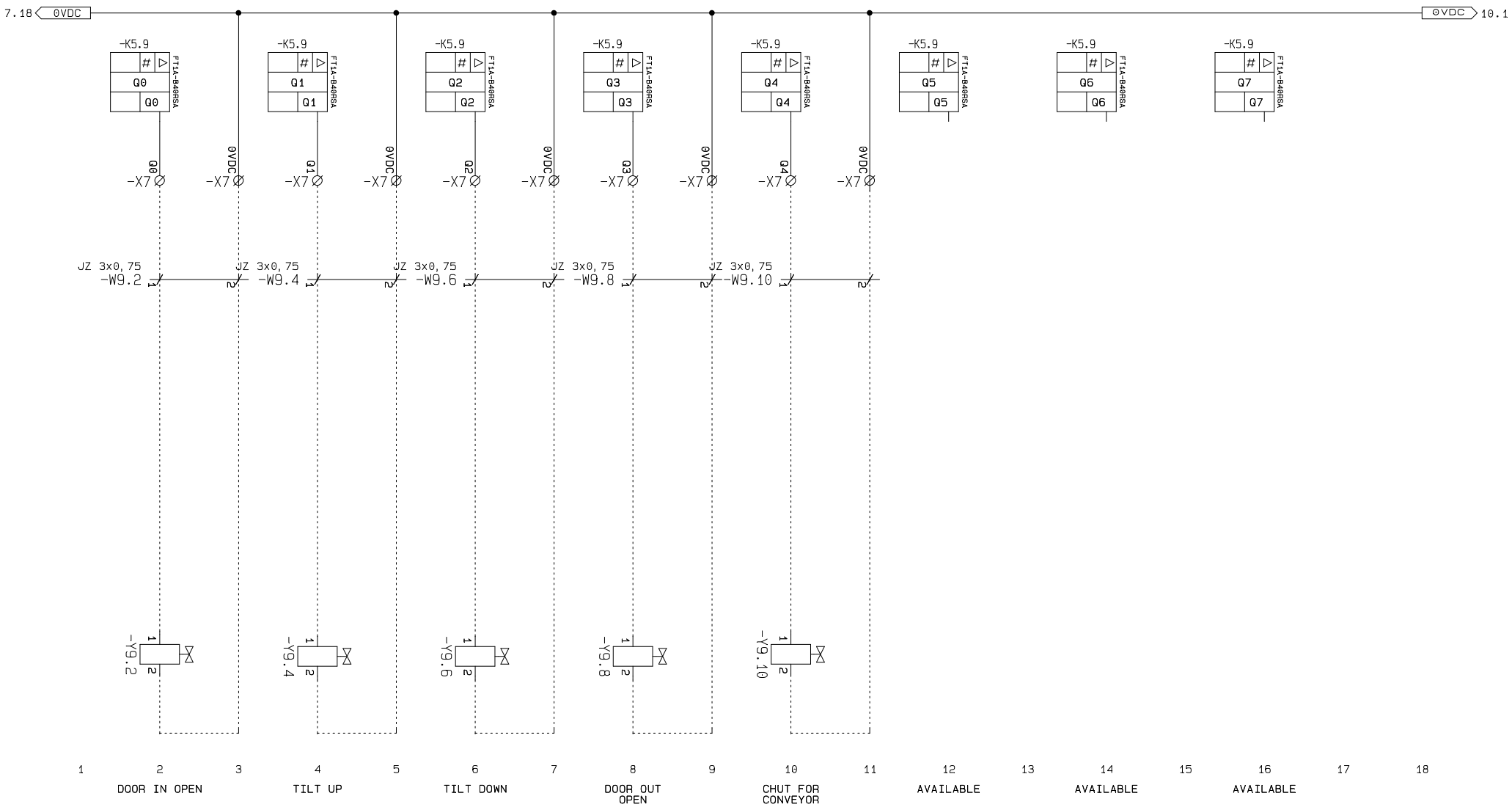
7.18
0VDC
10.1
-K5.9
FT1A-B48RSA
Q0
Q1
Q2
Q3
Q4
Q5
Q6
Q7
-X7
JZ 3x0,75
-W9.2
-W9.4
-W9.6
-W9.8
-W9.10
-Y9.2
-Y9.4
-Y9.6
-Y9.8
-Y9.10
1
2
3
4
5
6
7
8
9
10
11
12
13
14
15
16
17
18
DOOR IN OPEN
TILT UP
TILT DOWN
DOOR OUT OPEN
CHUT FOR CONVEYOR
AVAILABLE
AVAILABLE
AVAILABLE

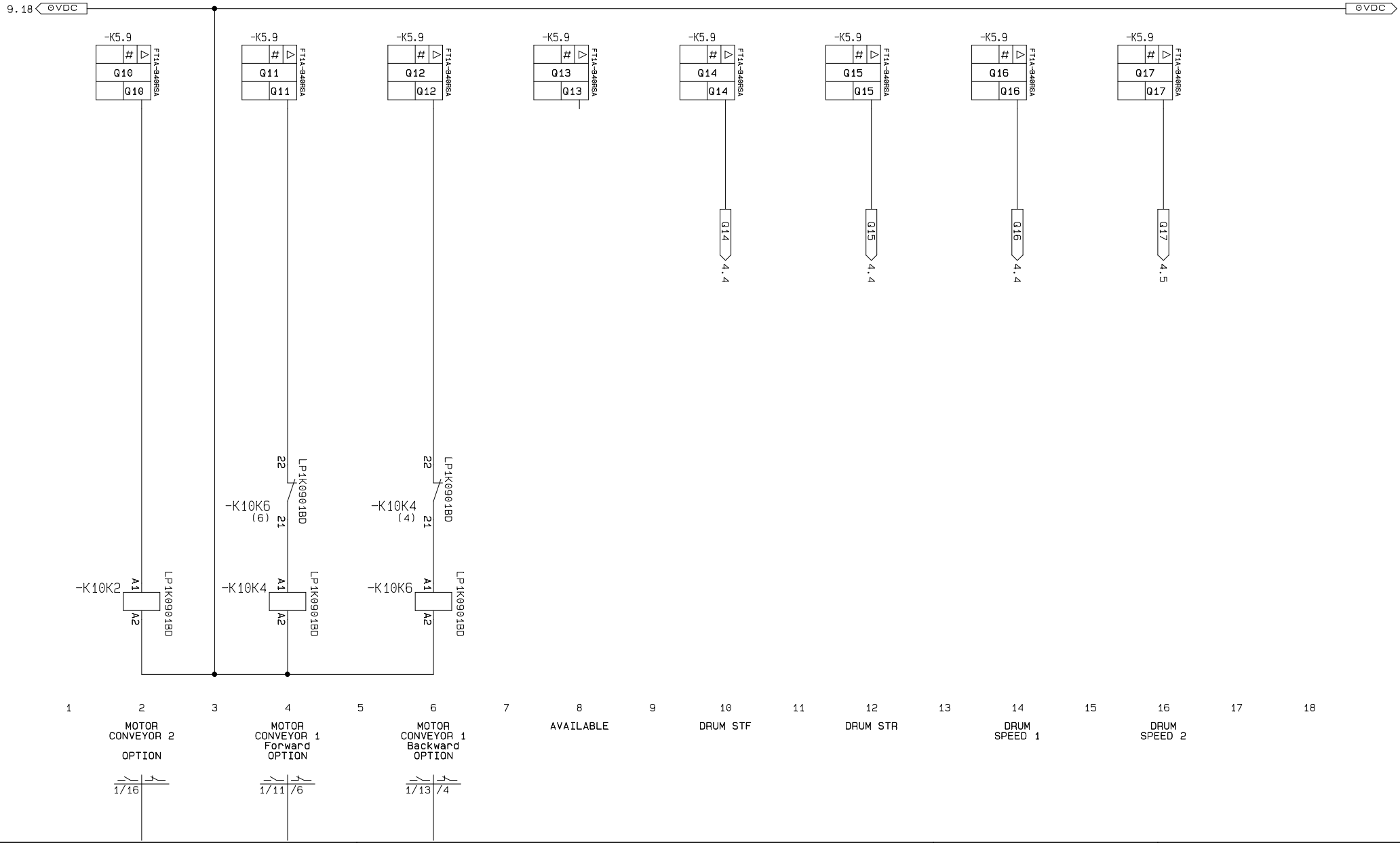
9.18
0VDC
0VDC
-K5.9
FT1A-B48RSA
Q10
Q11
Q12
Q13
Q14
Q15
Q16
Q17
4.4
4.4
4.4
4.5
-K10K2
-K10K4
-K10K6
(6)
(4)
A1
A2
21
22
LP1K0901BD
1
2
3
4
5
6
7
8
9
10
11
12
13
14
15
16
17
18
MOTOR CONVEYOR 2 OPTION
MOTOR CONVEYOR 1 Forward OPTION
MOTOR CONVEYOR 1 Backward OPTION
AVAILABLE
DRUM STF
DRUM STR
DRUM SPEED 1
DRUM SPEED 2
1/16
1/11 /6
1/13 /4

Name	I/O	Description	Component
+A0-K5.9:I0	I0	EMERGENCY STOP OK	+A0-S5.16:X1
+A0-K5.9:I1	I1	ERROR DRUM	+A0-U1.6:10
+A0-K5.9:I2	I2	START	+A0-S6.2:14
+A0-K5.9:I3	I3	STOP	+A0-S6.4:22
+A0-K5.9:I4	I4	LID SENCOR	+A0-B6.10:4
+A0-K5.9:I5	I5	AVAILABLE	
+A0-K5.9:I6	I6	AVAILABLE	
+A0-K5.9:I7	I7	AVAILABLE	
+A0-K5.9:I10	I10	AVAILABLE	
+A0-K5.9:I11	I11	AVAILABLE	
+A0-K5.9:I12	I12	AVAILABLE	
+A0-K5.9:I13	I13	AVAILABLE	
+A0-K5.9:I14	I14	AVAILABLE	
+A0-K5.9:I15	I15	AVAILABLE	
+A0-K5.9:I16	I16	AVAILABLE	
+A0-K5.9:I17	I17	AVAILABLE	
+A0-K5.9:I20	I20	AVAILABLE	
+A0-K5.9:I21	I21	AVAILABLE	
+A0-K5.9:I22	I22	AVAILABLE	
+A0-K5.9:I23	I23	AVAILABLE	
+A0-K5.9:I24	I24	AVAILABLE	
+A0-K5.9:I25	I25	AVAILABLE	
+A0-K5.9:I26	I26	AVAILABLE	
+A0-K5.9:I27	I27	AVAILABLE	
+A0-K5.9:Q0	Q0	DOOR IN OPEN	+A0-Y9.2:1
+A0-K5.9:Q1	Q1	TILT UP	+A0-Y9.4:1
+A0-K5.9:Q2	Q2	TILT DOWN	+A0-Y9.6:1
+A0-K5.9:Q3	Q3	DOOR OUT OPEN	+A0-Y9.8:1
+A0-K5.9:Q4	Q4	CHUT FOR CONVEYOR	+A0-Y9.10:1
+A0-K5.9:Q5	Q5	AVAILABLE	
+A0-K5.9:Q6	Q6	AVAILABLE	
+A0-K5.9:Q7	Q7	AVAILABLE	
+A0-K5.9:Q10	Q10	MOTOR CONVEYOR 2 OPTION	+A0-K10K2:A1
+A0-K5.9:Q11	Q11	MOTOR CONVEYOR 1 Forward OPTION	+A0-K10K4:A1
+A0-K5.9:Q12	Q12	MOTOR CONVEYOR 1 Backward OPTION	+A0-K10K6:A1
+A0-K5.9:Q13	Q13	AVAILABLE	
+A0-K5.9:Q14	Q14	DRUM STF	+A0-U1.6:11
+A0-K5.9:Q15	Q15	DRUM STR	+A0-U1.6:12
+A0-K5.9:Q16	Q16	DRUM SPEED 1	+A0-U1.6:13
+A0-K5.9:Q17	Q17	DRUM SPEED 2	+A0-U1.6:14

VS-Automatic A/S

FROM		CABLE	TO	
Indication	Page/path	Indication	Indication	Page/path
+A0-S1.2:2	1/1	+A0-W1.1:1	+A0-X6:L1	1/1
+A0-S1.2:4	1/2	+A0-W1.1:2	+A0-X6:L2	1/2
+A0-S1.2:6	1/2	+A0-W1.1:3	+A0-X6:L3	1/2
+A0-S1.2:N	1/2	+A0-W1.1:4	+A0-X6:N	1/2
+A0-Q1.2:PE	1/2	+A0-W1.1:PE	+A0-X6:PE	1/2
+A0-U1.6:U	1/6	+A0-W1.6:1	+A0-M1.6:U1	1/6
+A0-U1.6:V	1/6	+A0-W1.6:2	+A0-M1.6:V1	1/6
+A0-U1.6:W	1/6	+A0-W1.6:3	+A0-M1.6:W1	1/6
+A0-U1.6:PE	1/7	+A0-W1.6:S	+A0-M1.6:⏚	1/7
+A0-U1.6:PE	1/7	+A0-W1.6:⏚	+A0-M1.6:⏚	1/7
+A0-X1.11:1	1/10	+A0-W1.11:1	+A0-M1.11:U1	1/10
+A0-X5.16:2	1/11	+A0-W1.11:2	+A0-M1.11:V1	1/11
+A0-X5.16:3	1/11	+A0-W1.11:3	+A0-M1.11:W1	1/11
+A0-X5.16:4	1/11	+A0-W1.11:4	+A0-M1.11:N1	1/11
+A0-X5.16:PE	1/11	+A0-W1.11:PE	+A0-M1.11:PE	1/11
+A0-X1.16:1	1/15	+A0-W1.15:1	+A0-M1.16:U1	1/15
+A0-X5.16:2	1/16	+A0-W1.15:2	+A0-M1.16:V1	1/16
+A0-X5.16:3	1/16	+A0-W1.15:3	+A0-M1.16:W1	1/16
+A0-X5.16:4	1/16	+A0-W1.15:4	+A0-M1.16:N1	1/16
+A0-X5.16:PE	1/16	+A0-W1.15:PE	+A0-M1.16:PE	1/16
+A0-X4:1	3/3	+A0-W3.3:1	+A0-S5.2:1	3/3
+A0-X4:2	3/3	+A0-W3.3:2	+A0-S5.2:2	3/3
+A0-X4:3	3/3	+A0-W3.3:3	+A0-S5.2:11	3/3
+A0-X4:4	3/3	+A0-W3.3:4	+A0-S5.2:12	3/3
+A0-S5.16:13	3/16	+A0-W3.3:5	+A0-X4:9	3/15
+A0-S5.16:14	3/16	+A0-W3.3:6	+A0-X4:10	3/16
+A0-S5.16:X1	3/17	+A0-W3.3:7	+A0-X4:11	3/16
+A0-X6:I2	6/7	+A0-W3.3:8	+A0-S6.7:14	6/7
+A0-X6:I3	6/9	+A0-W3.3:9	+A0-S6.9:22	6/9
+A0-X4:PE	3/3	+A0-W3.3:PE	+A0-D5.14:PE	5/13
+A0-X4:6	3/7	+A0-W5.8:2	+A0-X4:5	3/7
+A0-X4:7	3/8	+A0-W5.8:3	+A0-S3.8:2	3/8
+A0-X4:8	3/8	+A0-W5.8:4	+A0-S3.8:1	3/8
		+A0-W5.9	+A0-D5.14:R232	5/13
+A0-X6:1+	6/10	+A0-W6.1:1	+A0-S6.4:21	6/4
+A0-X6:I2	6/7	+A0-W6.1:2	+A0-S6.2:14	6/2
+A0-X6:I3	6/9	+A0-W6.1:3	+A0-S6.4:22	6/4

VS-Automatic A/S

FROM		CABLE	TO	
Indication	Page/path	Indication	Indication	Page/path
+A0-X6:I4	6/11	+A0-W6.10:BK	+A0-B6.10:4	6/11
+A0-X6:1+	6/10	+A0-W6.10:BN	+A0-B6.10:1	6/10
+A0-X6:2-	6/11	+A0-W6.10:BU	+A0-B6.10:3	6/11
+A0-X7:Q0	9/2	+A0-W9.2:1	+A0-Y9.2:1	9/2
+A0-X7:0VDC	9/3	+A0-W9.2:2	+A0-Y9.2:2	9/2
+A0-X7:Q1	9/4	+A0-W9.4:1	+A0-Y9.4:1	9/4
+A0-X7:0VDC	9/5	+A0-W9.4:2	+A0-Y9.4:2	9/4
+A0-X7:Q2	9/6	+A0-W9.6:1	+A0-Y9.6:1	9/6
+A0-X7:0VDC	9/7	+A0-W9.6:2	+A0-Y9.6:2	9/6
+A0-X7:Q3	9/8	+A0-W9.8:1	+A0-Y9.8:1	9/8
+A0-X7:0VDC	9/9	+A0-W9.8:2	+A0-Y9.8:2	9/8
+A0-X7:Q4	9/10	+A0-W9.10:1	+A0-Y9.10:1	9/10
+A0-X7:0VDC	9/11	+A0-W9.10:2	+A0-Y9.10:2	9/10

VS AUTOMATIC
Ormhøjgårdvej 15 DK-8700 Horsens
Tlf. +45 75 64 18 99

Customer: Hedensted Gruppen A/S	Designer: tbt	Case no: Bodydru
Project: Ø150 Bodydrum 2017	Printed: 07-11-2017	Rev.:
Pagetitel: Cable list	Checked: 10-10-2017	Page: 13 of 14

Itemnumber	Type	Description	Manufactor	Quant.
				13
4200-4005	4200-4005	EMC filter, 3 phases, 400V, Low leakage / EMC filter5.5KW	EMERSON	1
630005105	X2 BASE 5	5" HMI with iX runtime	BEIJER ELECTRONICS	1
3303430259749	25974	Mcb C60N 1P+N C10	Merlin Gerin	1
3389110089486	ZBE102	SWITCH BODY, 1NC	TELEMECANIQUE	1
3389110095852	ZBZ33	LEGEND PLATE CARRIER 30x50 WITHOUT LEGEND 18x27	TELEMECANIQUE	1
3389110098587	ZBY5102	LEGEND WHITE/YELLOW 18X27mm WITHOUT TEXT	TELEMECANIQUE	1
3389110201000	VBF01	Main switch disconnector 20A 3P	TELEMECANIQUE	1
3389110274011	XPSAC5121	Safety modul cat.3, 3NO(s)+1sst, 24VAC/DC	TELEMECANIQUE	1
3389110363234	LP1K0901BD	CONTACTOR 9A 3P+1NC UC 24V DC	TELEMECANIQUE	3
3389110551907	VZ11	NEUTRAL POLE FOR VARIO VO2-V2	TELEMECANIQUE	1
3389110551938	VZ14	PE-MODULE FOR VARIO V02-V2	TELEMECANIQUE	1
3389110886955	XB4BA31	PUSHBUTTON COMPLETE, FLUSH GREEN, 1NO	TELEMECANIQUE	2
3389110886962	XB4BA42	PUSHBUTTON COMPLETE, FLUSH RED, 1NC	TELEMECANIQUE	2
3389110888867	ZB4-BS844	EMERGENCY STOP PUSHBUTTON Ø40, PUSH-TURN	TELEMECANIQUE	1
3389110892048	XB4-BW33B5	ILLUMINATED PUSHBUTTON GREEN 24V AC/DC, 1NO+1NC	TELEMECANIQUE	1
4008190076733	ZPE 2,5	GROUND TERMINAL	WEIDMÜLLER	1
4008190099633	WDU 2,5	TERMINAL	WEIDMÜLLER	27
4008190143640	WPE 2,5	GROUND TERMINAL	WEIDMÜLLER	1
4008190169527	WDK 2,5	TERMINAL	WEIDMÜLLER	4
4015394181262	13A	Plug StarTOP 5P/16A/400V/IP44	MENNEKES ELEKTROTECHNIK GMBH	1
4023146000228	JZ 3x0,75			-
8713574129313	MAS0504026R5	Cabinet 500x400x260	ELDON	2
FT1A-B40RSA	FT1A-B40RSA	PLC 18 IN - 8 OUT	IDEC	1
M30004400135A	M300-044-00135A	CONVERTER 5.5KW 400V	EMERSON	1
SPD 24601	SPD 24601	Switching Power Supply 230V/24vdc 2.5A	CARLO CAVAZZI	1
SRMU1ZU1ZQF17	SRM-U1Z-U1Z-QF-175	WIRE STOP	BERNSTEIN A/S	1
XAL-D213	XAL-D213			1

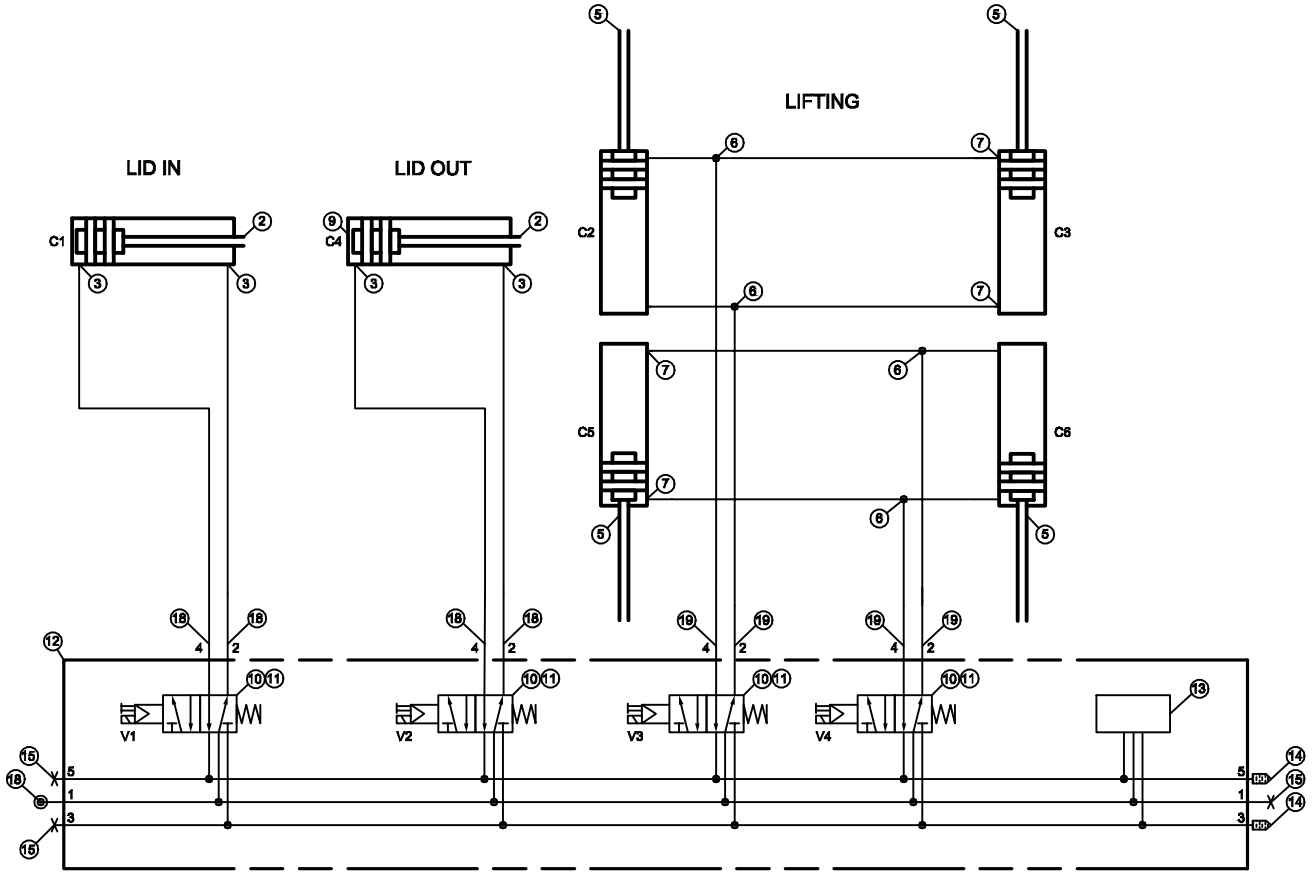

Hose colors
RED = cylinder +
BLUE = cylinder -

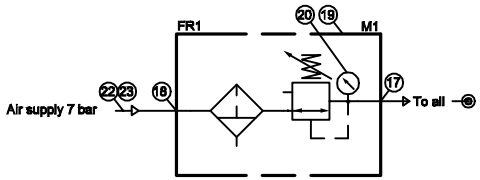

Revision:	Approved	Date:	Revision Description
1	KL	28-08-2017	Made

This document is strictly confidential and must on no account be copied or disclosed to any third person.
HEDENSTED GRUPPEN AS

Scale:	Not specificed tolerance according to: DS/ISO 2768-m	Sheet size: A2
	Surface properties:	Sheet: 1 /1
Part No.: 190050	Material:	
Diagram: Airdiagram XL Bodydrum 2017_01		
Parts list: Parts list XL Bodydrum 2017_01		

Hedensted Gruppen A/S

Diagram		Airdiagram XL Bodydrum 2017_01		Rev: 01	
Bom no.		Parts list XL Bodydrum 2017_01		Sign. KL	
Title		HG 150cm XL Bodydrum			
Pos	Qty	Description	HG no.	Supplier no.	Comment
1	1	Cylinder PRA/182032/M/250	212062	PRA/182032/M/250	C1
2	2	F-Joint QM/8025/25	214115	QM/8020/25	
3	4	Flow control banjo Ø6 x 1/8"	215105	C0K510618	
4	4	Cylinder PRA/182080/M/125	M102618	PRA/182080/M/125	C2+C3+C5+C6
5	4	F-Joint QM/8080/25	214128	QM/8080/25	
6	4	L-connector 3/8" x Ø8 x Ø8	216427	C02680838	
7	4	Straight connector Ø8 x 3/8"	215938	C02250838	
8	1	Cylinder PRA/182032/M/200	212063	PRA/182032/M/200	C4
9	1	D-Bracket QA/8032/23	214156	QA/8032/23	
10	4	Valve 5/2 1/4" 24VDC/Spring	195396	V51B517A-A213J	V1+V2+V3+V4
11	4	Cable w. elbow plug 22mm 3P 1M 250v	215185	M/P43313/1	
12	1	Manifold V51 for 5x5/2 valves	195397	V51B505	
13	1	Blanking plate for V51 manifold	195399	V510551	
14	2	Filter sintered 1/4"	216797	T40C-2800	
15	3	Plug 1/4" inside hex	216743	M100028	
16	5	Straight connector Ø6 x 1/4"	215930	C02250628	
17	4	Straight connector Ø8 x 1/4"	215934	C02250828	
18	2	Elbow swivel Ø8 x 1/4"	216537	C02470828	
19	1	Regulator with filter 1/4" 0,3-10 bar (AutoDrain)	210178	B72G-2GK-AL3-RMN	FR
20	1	Gauge 0-10 bar 1/8" Ø40	215550	18-013-989	
21	1	Nut, panel mount 4248-01	215530	4248-01	
22	1	Quick release coupling Plug 1/4" female	217040	CEJN 320	
23	1	Elbow swivel Ø8 x 1/4"t	M101466	C01470828	
24					