SUPER SKUB HYDRA

SPARE PARTS LIST
Year 2018 – 20xx

Made 02-01-2019

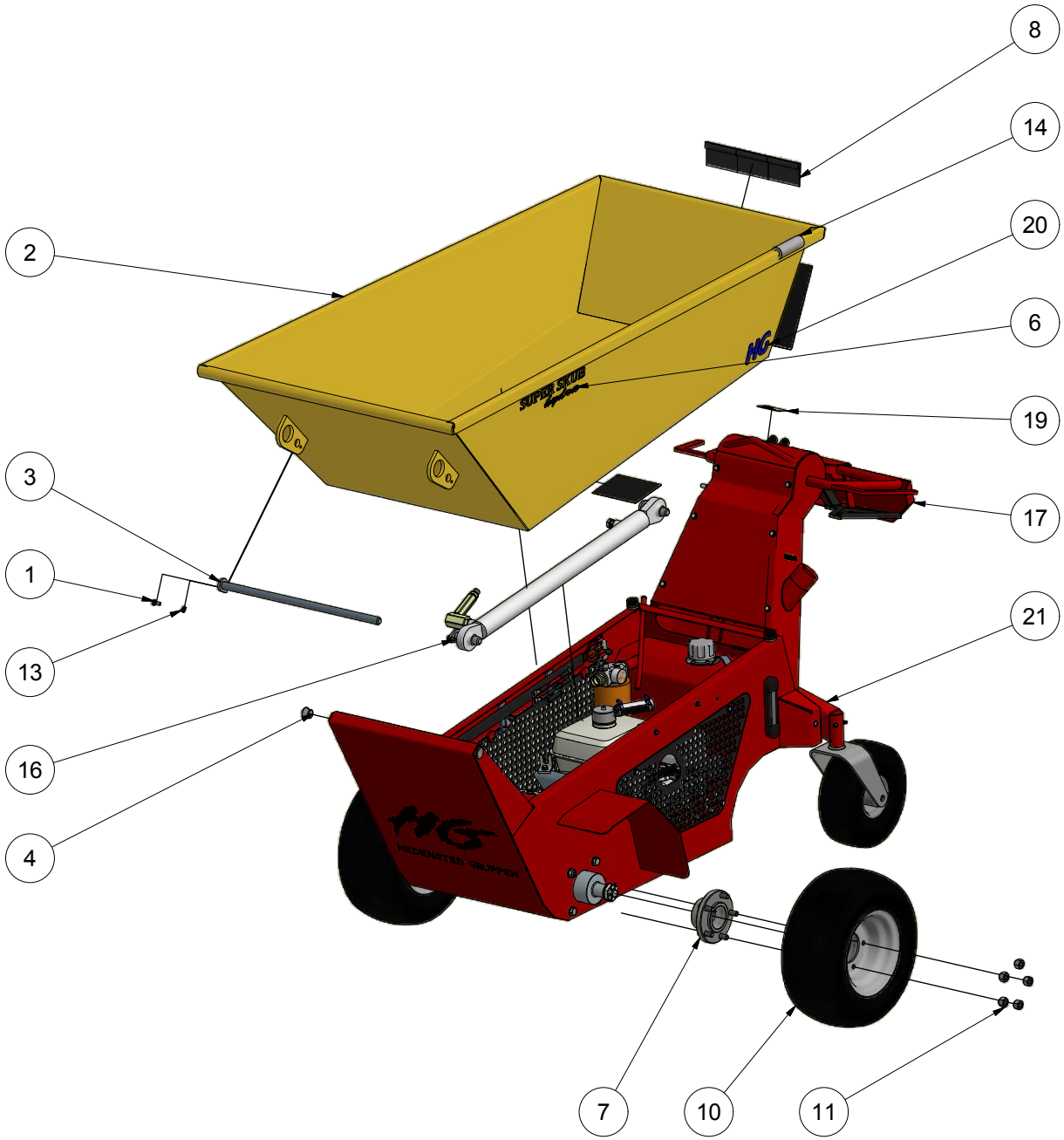

PARTS LIST			
ITEM	QTY	PART NUMBER	DESCRIPTION
1	1	11408016	Hexagon bolt M8x16 FZB
2	1	423400	Container for SS hydra
3	1	423410	Tilting shaft for hydra
4	2	423428	Slide bushing Ø20xØ23x15
5	1	423438	Logo forward,rev,tilt.throtle,
6	2	423440	Logo SS Hydra
7	2	423471	Wheel hub for omrw
8	0,3 m	423478	Edge profile w/Lip 54mm
9	1	423506	ID plate Super skub / Hydra
10	2	474733	Wheel F. LP190-8/8 Hf400 silve
11	10	479910	Wheel nut M12x1,5 NV22 60`FZB
12	4	7003208	Blind rivet Ø3.2x8 (4-5,5)
13	1	82108000	Washer M8 FZB
14	4,5 m	853026	Thermo insulation, 33/8mm
15	2	89404036	Pin split Ø4x36
16	1	M102406	Hydraulic cylinder assembly
17	1	M102502	Base assembly 2, S.S Hydra 2016
18	1	M102790	Warning sign for 280100
19	1	M102792	Warning sign for 280100
20	2	M103449	HG Logo for SS - size 52 x 110mm
21	1	M12110	Wheel suspension assembly

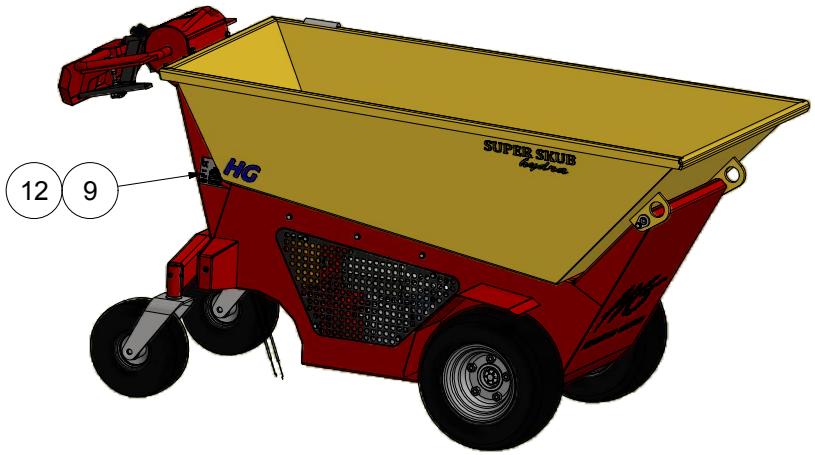

Break all edges

Revision:	Approved	Date:	Revision Description
5	KKS	27-11-2018	Description changed

The document is strictly confidential and may not be in no account be copied or discloses to any third person HEDENSTED GRUPPEN A/S

HEDENSTED GRUPPEN

Scale: 1 : 15	Not specificed tolerance according to: DS/ISO 2768-m	Sheet size: A3
	Surface properties: No	Sheet: 1 /2
Part No.: 280100	Material:	
Description 1: HG Super Skub Hydra 2016, electric start		
Description 2: Incl. Suspension		

Parts List			
ITEM	QTY	PART NUMBER	DESCRIPTION
1	1	43364	Wheel hub
2	5	479920	Hub bolt M12-1,5x36

Use jig and hydraulic press to mount bolts

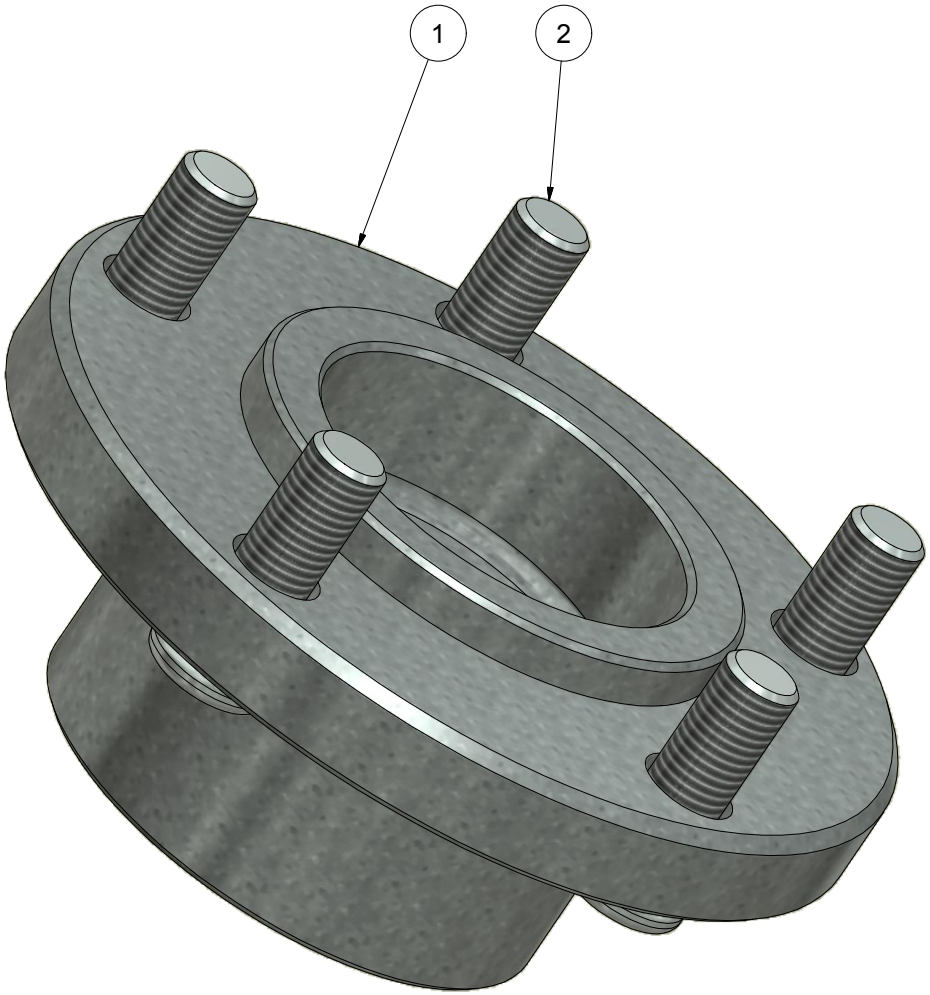

Break all edges

Revision:	Approved	Date:	Revision Description
1	HG	28-09-2015	Revision changed to numeric

The document is strictly confidential and can in no account be copied or discloses to any third person.
HEDENSTED GRUPPEN A/S

HEDENSTED GRUPPEN

Scale: 2 : 1,5	Not specificed tolerance according to: DS/ISO 2768-m		Sheet size: A3
	Surface properties:		Sheet: 1 /1
Part No.: 423471	Material:		
Description 1: Wheel hub for omrw			
Description 2: For OMRW 315			

PARTS LIST			
ITEM	QTY	PART NUMBER	DESCRIPTION
1	2	11408016	Hexagon bolt M8x16 FZB
2	2	423409	Lock pin for cylinder
3	1	423461	Hydraulic cylinder
4	1	423462	Hose leak valve
5	1	477100	Straight connector 3/8" x 3/8"
6	5	477163	Bopnded seal washer 3/8"
7	1	477222	Banjo bolt 3/8"
8	1	477225	Swiwel 90º GG 3/8"
9	2	82108000	Washer M8 FZB

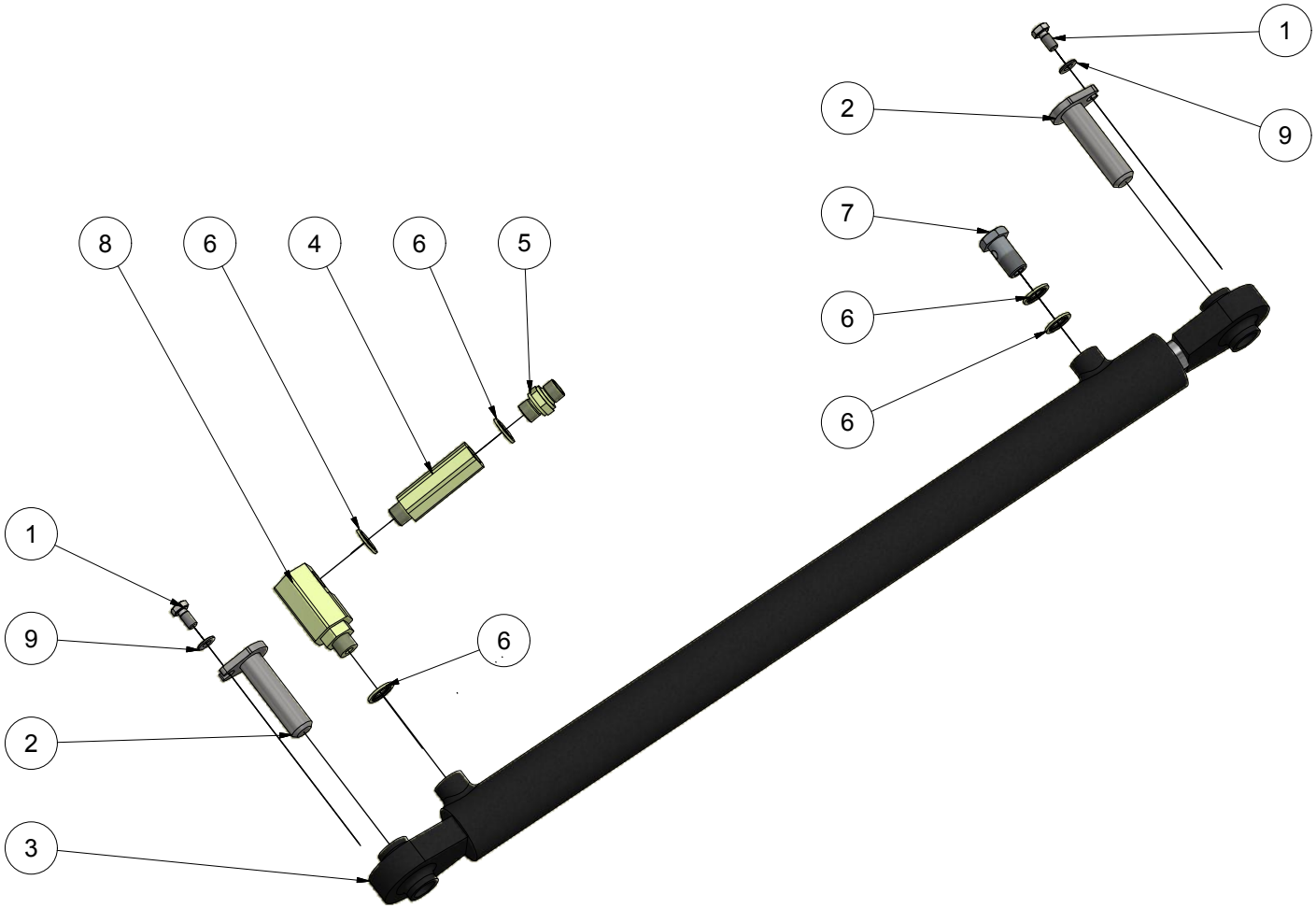

Break all edges

Revision:	Approved	Date:	Revision Description
1	SK	21-09-2016	Made

The document is strictly confidential and may in no account be copied or discloses to any third person HEDENSTED GRUPPEN A/S

HEDENSTED GRUPPEN

Scale: 1 : 4	Not specificed tolerance according to: DS/ISO 2768-m	Sheet size: A3
	Surface properties: No	Sheet: 1 /1
Part No.: M102406	Material:	
Description 1: Hydraulic cylinder assembly		
Description 2:		

A (1 : 8)

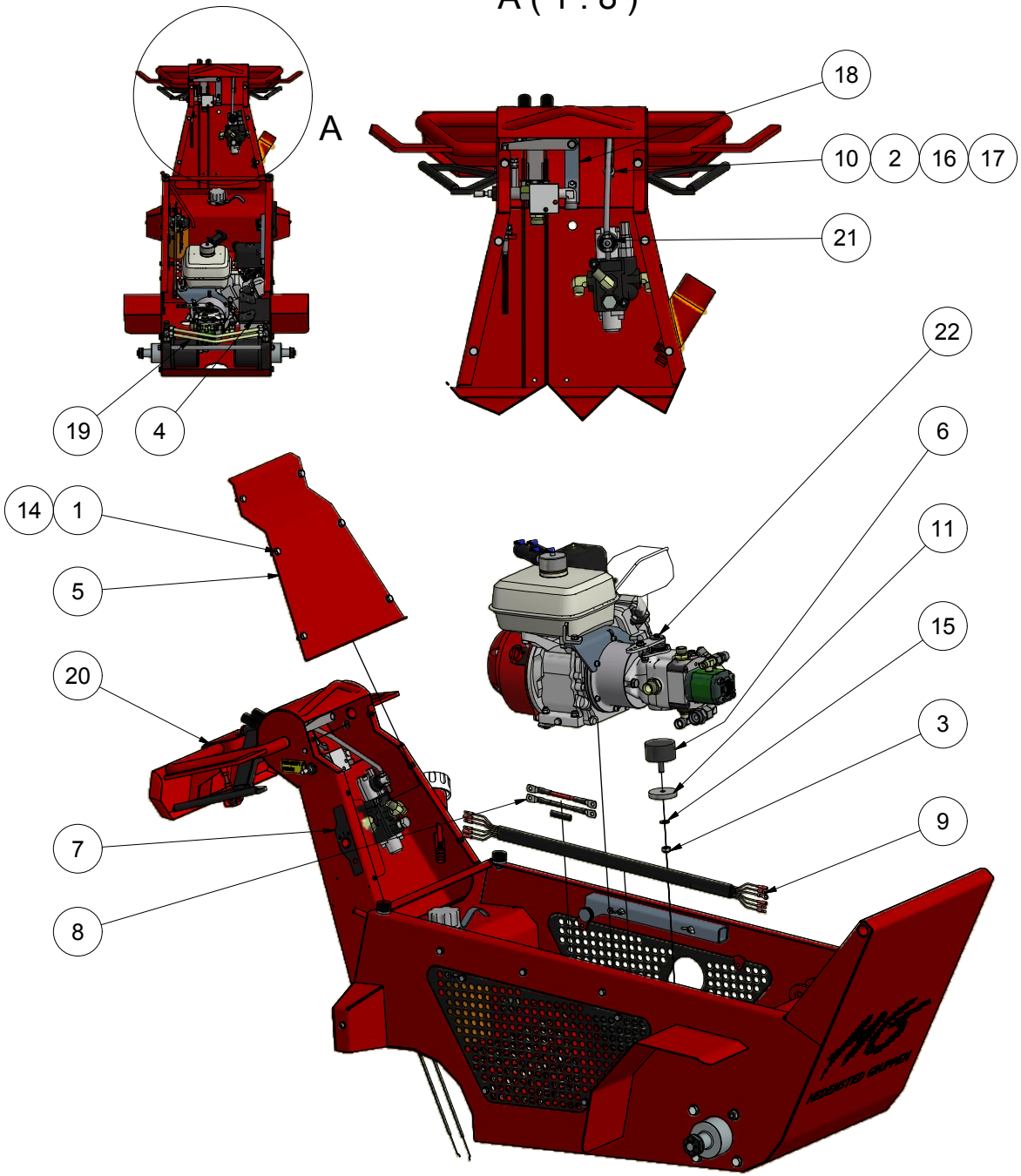

PARTS LIST			
ITEM	QTY	PART NUMBER	DESCRIPTION
1	6	11408016	Hexagon bolt M8x16 FZB
2	1	11412016	Hexagon bolt M12x16 FZB
3	1	17910000	Self-locking nut M10 FZB
4	1	422676	Battery assembly
5	1	423411	Coverplate for frame
6	1	423421	Vibration absorber Ø65x35 - M10
7	1	423464	Sticker for key start
8	1	423468	Power supply for battery
9	1	423469	Power supply for engine
10	1	423482	Nut for stop screw
11	1	423542	Washer for vibration absorber
12	4,0 l	476505	Gasoline 95 unleaded
13	14,5 l	476721	Hydraulic oil Q8 handel 46
14	6	82108000	Washer M8 FZB
15	1	82110000	Washer M10 FZB
16	1	82112000	Washer M12 FZB
17	1	87512000	Spring washer M12 FZB
18	1	M102038	Assembly bearring for handle
19	1	M102490	Wheel motor assembly
20	1	M102503	Base assembly 1, S.S Hydra 2016
21	1	M102504	Valves assembly S.S 2016
22	1	M102505	Engine assembly 3 TMP

Break all edges

Revision:	Approved	Date:	Revision Description
4	KL	17-12-2018	Quantity on 476505 and 476721 changed

The document is strictly confidential and may in no account be copied or discloses to any third person HEDENSTED GRUPPEN A/S

HEDENSTED GRUPPEN

Scale: 1 : 10	Not specificed tolerance according to: DS/ISO 2768-m		Sheet size: A3
	Surface properties: No		Sheet: 1 /1
Part No.: M102502	Material:		
Description 1: Base assembly 2, S.S Hydra 2016			
Description 2: Super Skub Hydra 2016			

Parts List			
ITEM	QTY	PART NUMBER	DESCRIPTION
1	2	10212050	Hexagon cylinder head M12x50 FZB
2	1	421419	Negative terminal
3	2	423467	Brace for battery
4	1	423496	Cover for positive terminal
5	1	423497	Cover for gorund terminal
6	1	423529	Positive terminal
7	1	476010	Battery

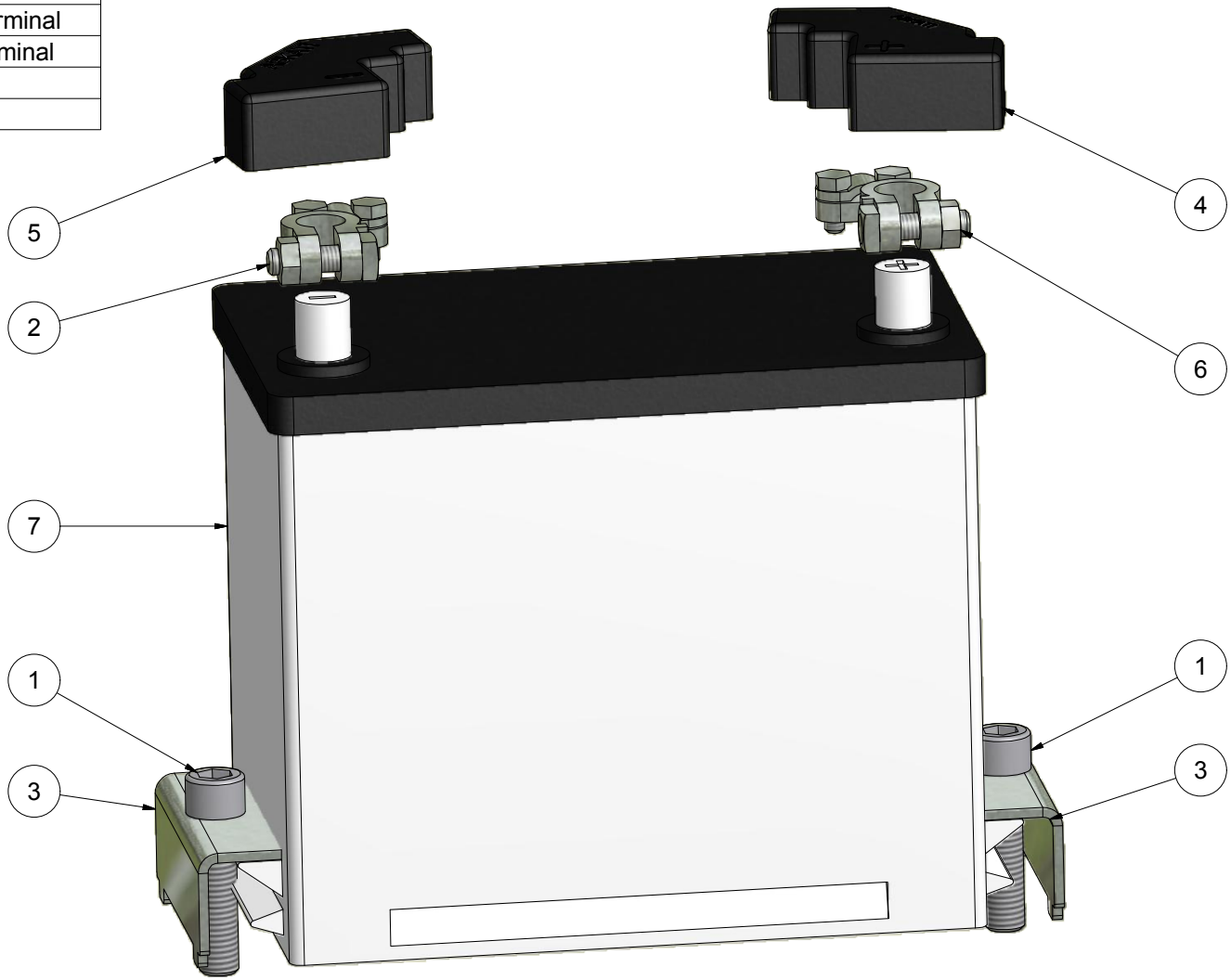

Break all edges

Revision:	Approved	Date:	Revision Description
1	HG	28-09-2015	Revision changed to numeric

The document is strictly confidential and may in no account be copied or discloses to any third person.
HEDENSTED GRUPPEN A/S

HEDENSTED GRUPPEN

Scale: 1 : 1,5	Not specificed tolerance according to: DS/ISO 2768-m		Sheet size: A3
	Surface properties:		Sheet: 1 /1
Part No.: 422676	Material:		
Description 1: Battery assembly			
Description 2:			

PARTS LIST			
ITEM	QTY	PART NUMBER	DESCRIPTION
2	1	423423	Slide bushing Ø12xØ14x7
5	1	423414	Bracket for butterfly handle
6	2	11408020	Hexagon bolt M8x20 FZB
7	2	82108000	Washer M8 FZB

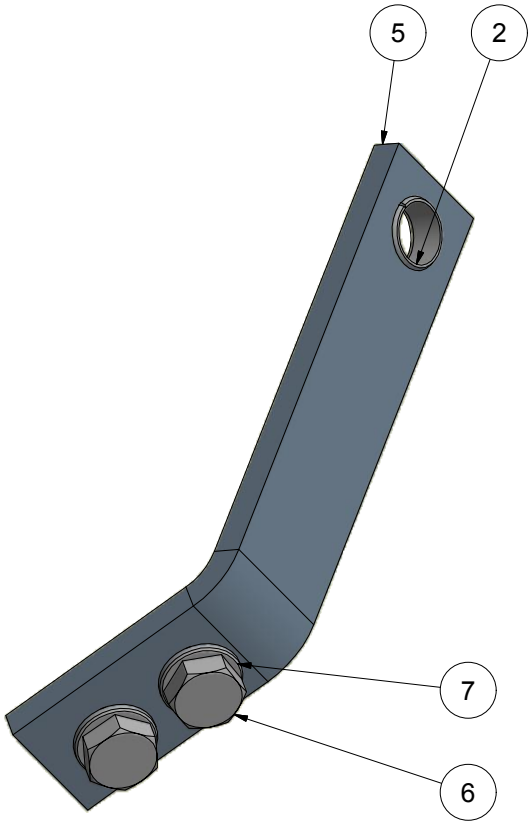

Break all edges

Revision:	Approved	Date:	Revision Description
1	SK	03-05-2016	Made

The document is strictly confidential and may in no account be copied or discloses to any third person.
HEDENSTED GRUPPEN A/S

HEDENSTED GRUPPEN

Scale: 1 : 1	Not specificed tolerance according to: DS/ISO 2768-m		Sheet size: A3
	Surface properties: No		Sheet: 1 /1
Part No.: M102038	Material:		
Description 1: Assembly bearring for handle			
Description 2:			

PARTS LIST			
ITEM	QTY	PART NUMBER	DESCRIPTION
1	6	11412060	Hexagon bolt M12x60 FZB
2	7	17912000	Self-locking nut M12 FZB
3	1	423442	Pipe for wheel motor
4	2	423472	Hydraulic pipe for motor
5	2	423519	Wheel motor 347ccm Eaton delta
6	2	423545	Washer f/OMRW 45x20,5x4 FZB
7	4	424118	Cutting ring Ø15L
8	4	424122	Union Ø15L M22x1,5
9	1	43236	Spacer for wheel motor
10	4	477072	Tee Adjustable Ø15L x Ø15L x Ø15L (M/F/F)
11	4	477145	Straight connector w. gasket Ø15L 7/8"-14 UNF
12	14	82112000	Washer M12 FZB

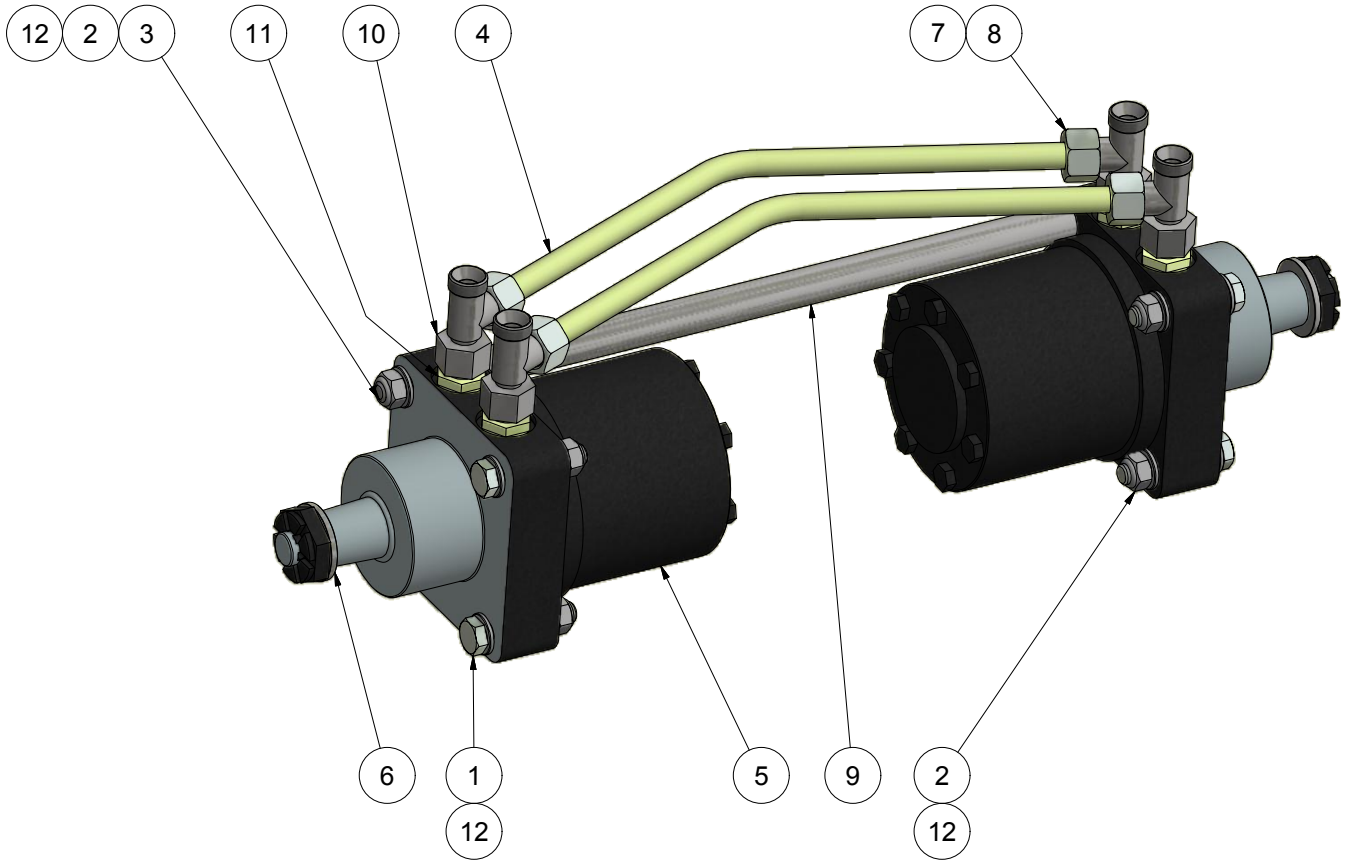

Break all edges

Revision:	Approved	Date:	Revision Description
4	KL	20-08-2018	Bolts M12x55 changed to M12x60mm

The document is strictly confidential and may not be in no account be copied or discloses to any third person.
HEDENSTED GRUPPEN A/S

HEDENSTED GRUPPEN

Scale: 1 : 3	Not specificed tolerance according to: DS/ISO 2768-m		Sheet size: A3
	Surface properties: No		Sheet: 1 /1
Part No.: M102490	Material:		
Description 1: Wheel motor assembly			
Description 2: SS hydra			

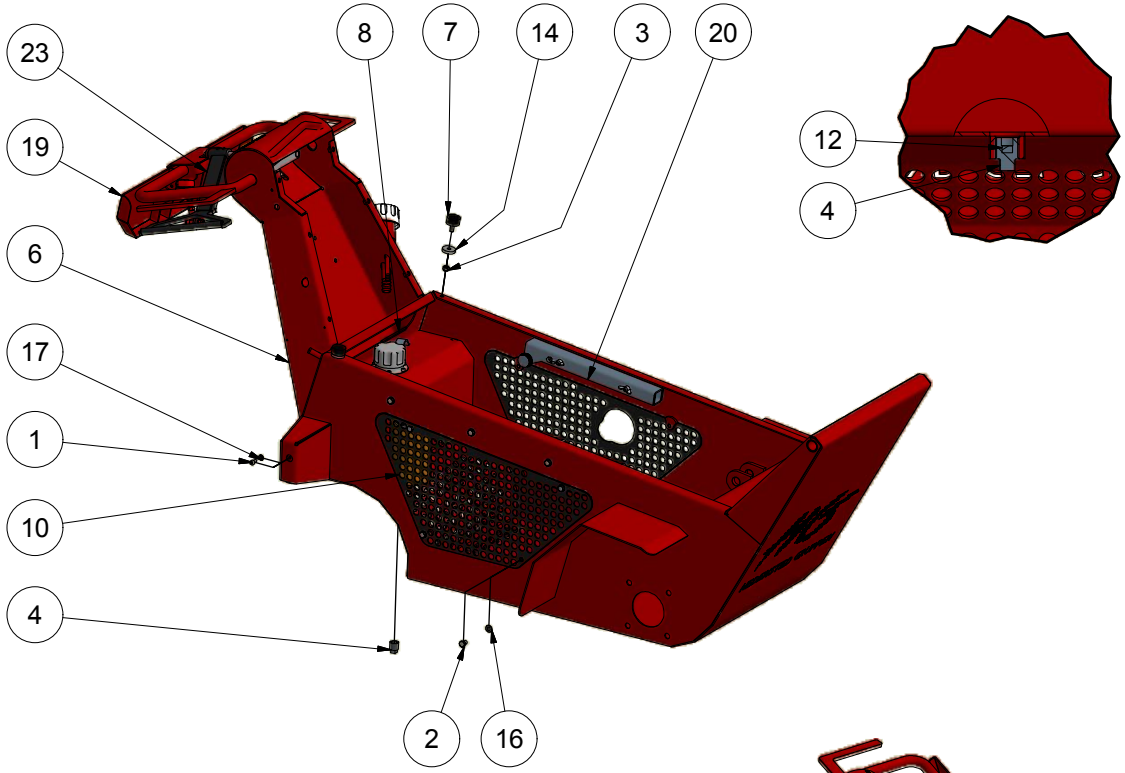

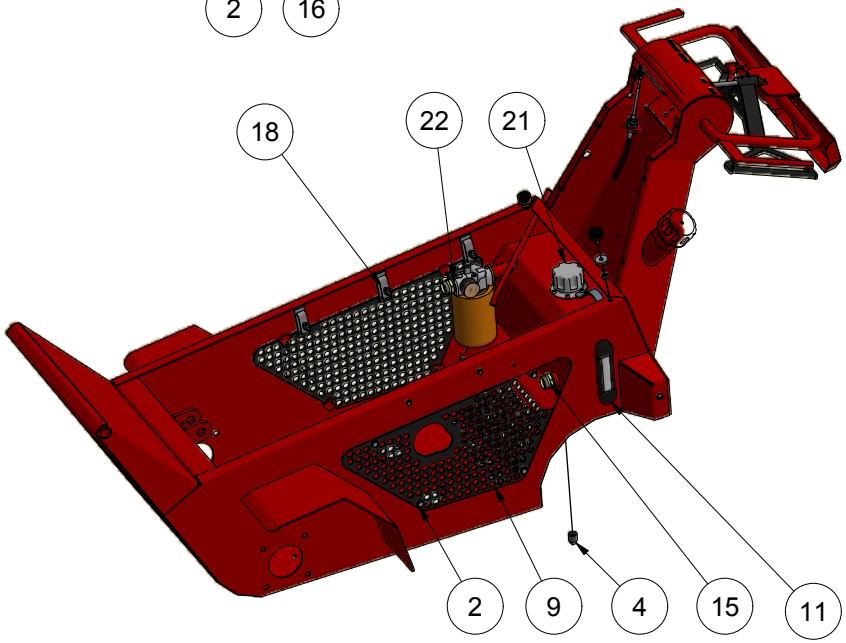

PARTS LIST

ITEM	QTY	PART NUMBER	DESCRIPTION
1	2	10206012	Hexagon cylinder head M6x12 FZB
2	8	11408012	Hexagon bolt M8x12 FZB
3	2	17908000	Self-locking nut M8 FZB
4	1	413038	Plug black 1/2", GF
5	2	423068	Grease nipple M6 straight
6	1	423402	Assembly frame
7	2	423422	Vibration absorber Ø30x15 - M8
8	0,9 m	423431	Edge protection strip
9	1	423434	Ventilation plate Left
10	1	423456	Ventilation plate right
11	1	423460	Oil level indicator
12	1	423475	Magnet Premax 302 ø12,5 x 10mm.
13	1	423477	Warning logo DK
14	2	423484	Spacer for rubber
15	1	477126	Straight connector w. gasket Ø22L x 3/4"
16	8	82108000	Washer M8 FZB
17	2	84506000	Spring washer M6 FZB
18	3	M102402	Hose clamp
19	1	M102403	Bumper assembley
20	1	M102405	Safety Clamp
21	1	M12105	Filler neck assembly
22	1	M12106	Oil filter assembly
23	1	M12107	Trottel grip assembly

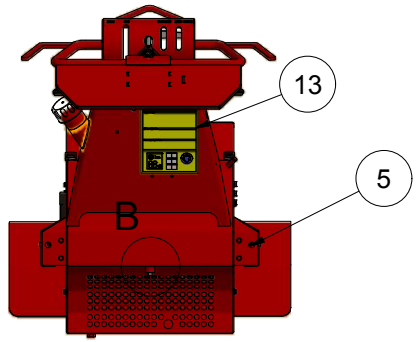

Break all edges

Revision:	Approved	Date:	Revision Description
1	KL	08-02-2016	Made

The document is strictly confidential and may in no account be copied or disclosed to any third person.
HEDENSTED GRUPPEN A/S

HEDENSTED GRUPPEN

Scale: 1 : 50

Not specificed tolerance according to: DS/ISO 2768-m

Sheet size: A3

Surface properties: No

Sheet: 1 /1

Part No.: M102503

Material:

Description 1: Assembly frame 2

Description 2: Super skub Hydra 1026

PARTS LIST			
ITEM	QTY	PART NUMBER	DESCRIPTION
1	1	423418	Hydraulic hose clamp
2	1	423513	Clamp for hyd tube
3	1	11408055	Hexagon bolt M8x55 FZB
4	1	17908000	Self-locking nut M8 FZB
5	2	82108000	Washer M8 FZB

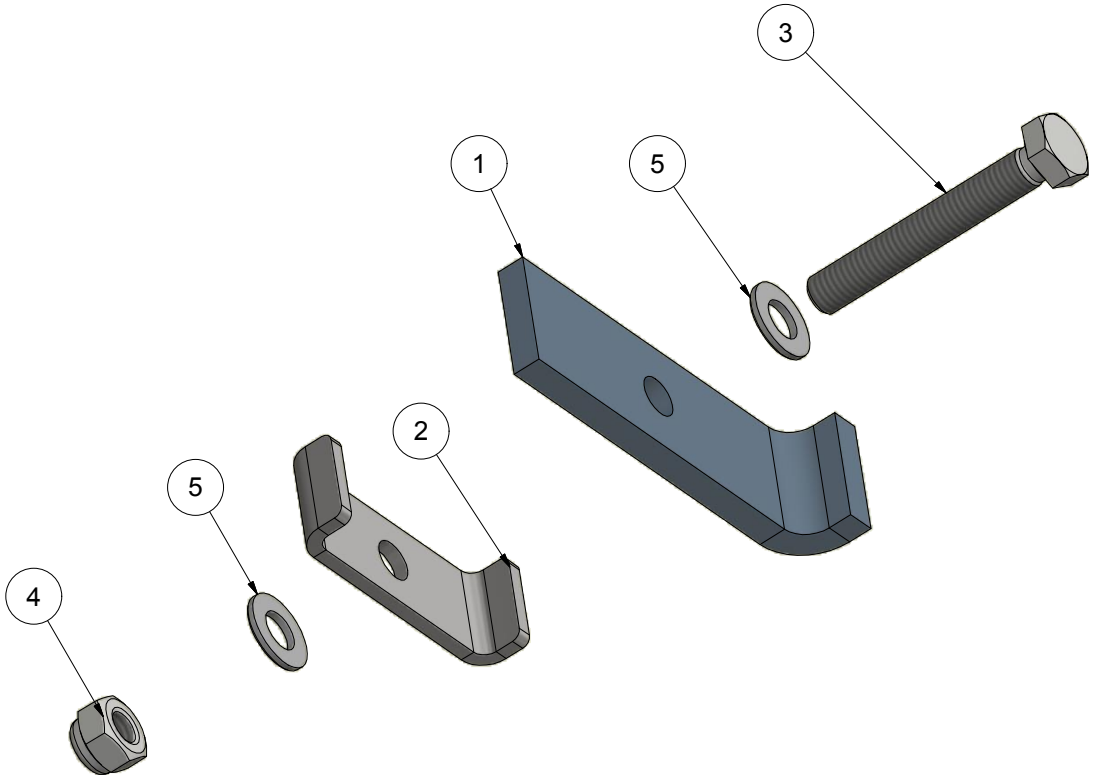

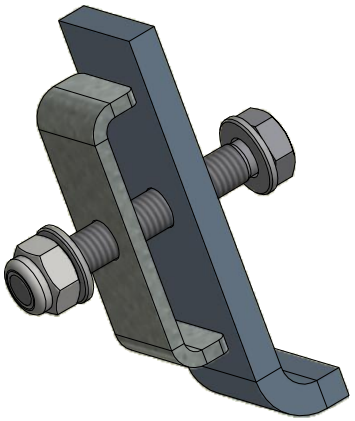

Break all edges

Revision:	Approved	Date:	Revision Description
1	SK	2016-09-21	Made

The document is strictly confidential and may not in no account be copied or discloses to any third person.
HEDENSTED GRUPPEN A/S

HEDENSTED GRUPPEN

Scale: 1 : 1	Not specificed tolerance according to: DS/ISO 2768-m		Sheet size: A3
	Surface properties: No		Sheet: 1 /1
Part No.: M102402	Material:		
Description 1: Hose clamp			
Description 2:			

PARTS LIST			
ITEM	QTY	PART NUMBER	DESCRIPTION
1	1	10508050	Stop screw M8x50-B
2	1	11406020	Hexagon bolt M6x20 FZB
3	2	1508000	Nut M8 FZB
4	1	17906000	Self-locking nut M6 FZB
5	2	17908000	Self-locking nut M8 FZB
6	2	415042	Ball angle joint AS13 M8
7	2	423423	Slide bushing Ø12xØ14x7
8	2	82106000	Washer M6 FZB
9	1	M100501	Lock rod assembly
10	1	M100503	Bumper assembly
11	2	M100507	Ball lock

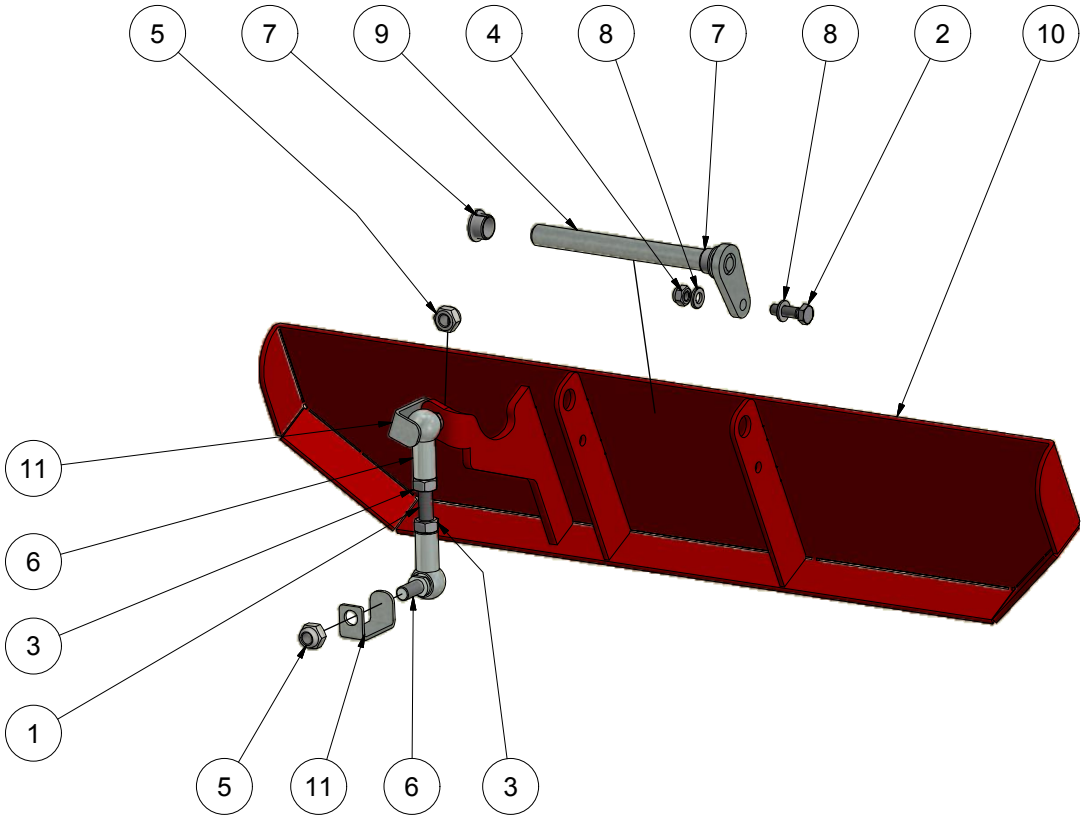

A (1 : 2)

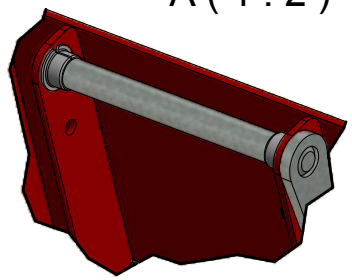

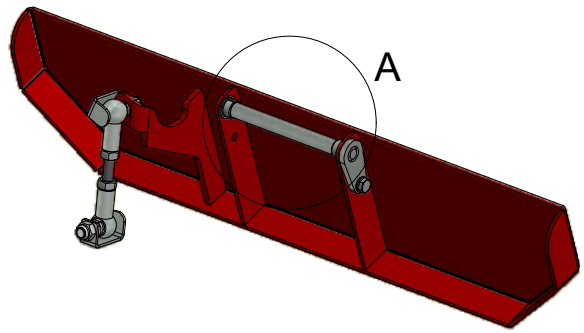

Break all edges

Revision:	Approved	Date:	Revision Description
1	SK	21-09-2016	Made

The document is strictly confidential and may in no account be copied or discloses to any third person.
HEDENSTED GRUPPEN A/S

HEDENSTED GRUPPEN

Scale: 1 : 4	Not specificed tolerance according to: DS/ISO 2768-m		Sheet size: A3
	Surface properties: No		Sheet: 1 /1
Part No.: M102403	Material:		
Description 1: Bumper assembley			
Description 2: Super skub Hydra			

PARTS LIST			
ITEM	QTY	PART NUMBER	DESCRIPTION
1	1	43322	Safety clamp, outer part
2	1	43324	Fingerscrew with knurling
3	1	43329	Safety clamp, inner part
4	2	11406060	Hexagon bolt M6x60 FZB
5	2	19806000	Wing nut M6 FZB
6	2	82106000	Washer M6 FZB

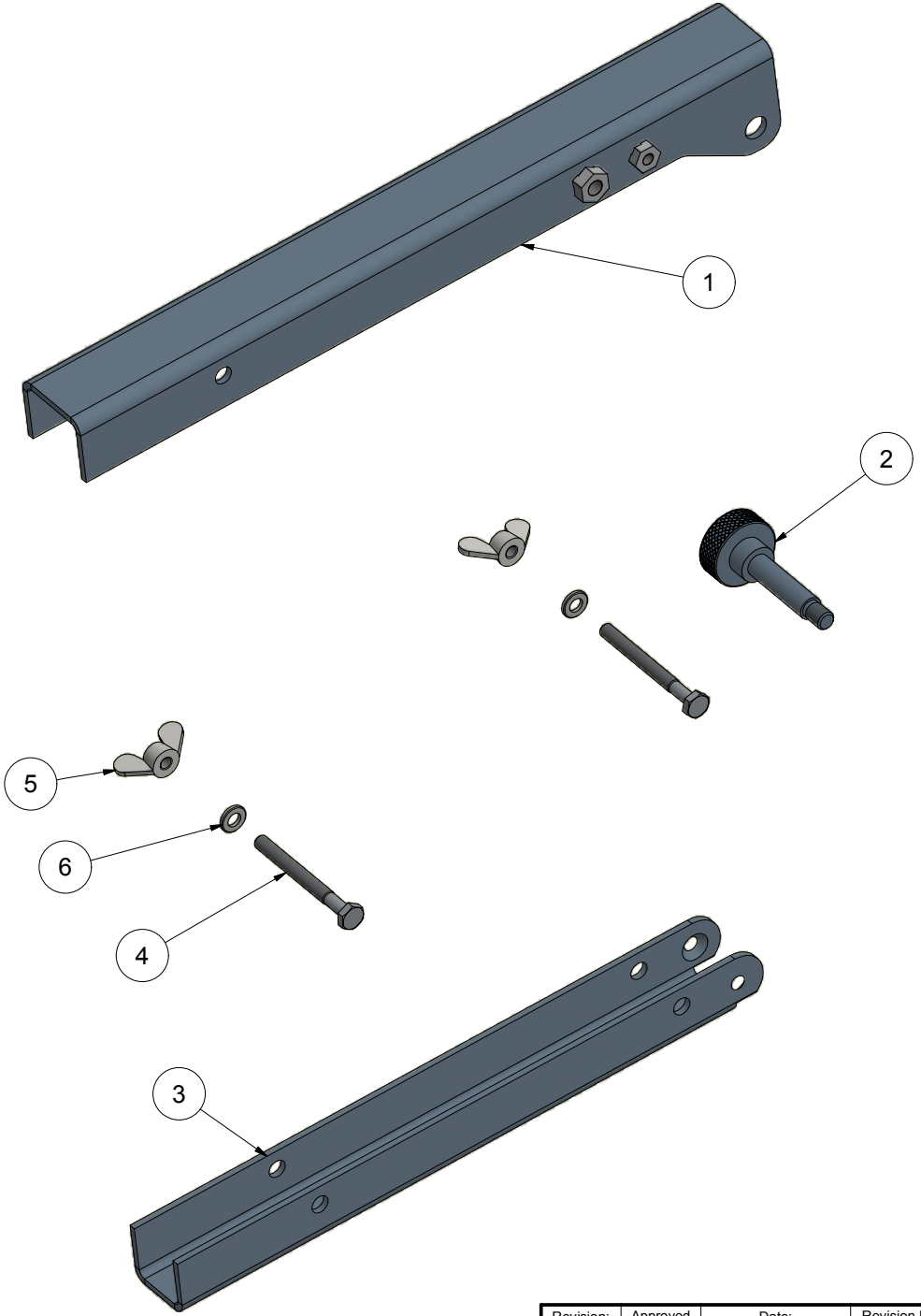

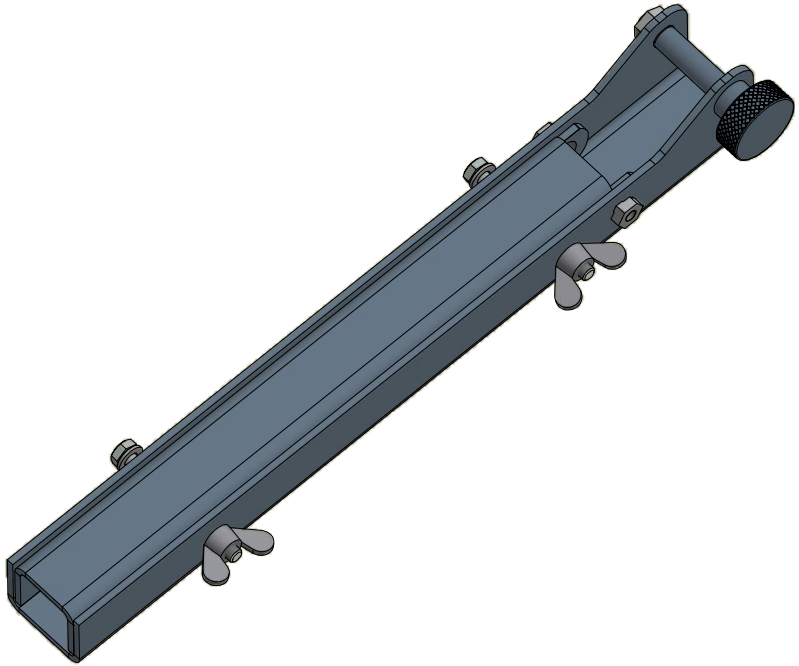

Break all edges

Revision:	Approved	Date:	Revision Description
1	SK	2016-09-21	Made

The document is strictly confidential and may in no account be copied or discloses to any third person.
HEDENSTED GRUPPEN A/S

HEDENSTED GRUPPEN

Scale: 1 : 2	Not specificed tolerance according to: DS/ISO 2768-m		Sheet size: A3
	Surface properties: No		Sheet: 1 /1
Part No.: M102405	Material:		
Description 1: Safety Clamp			
Description 2:			

PARTS LIST			
ITEM	QTY	PART NUMBER	DESCRIPTION
1	1	423459	Fillerneck HB70 with filter
2	1	43349	Bracket for petrol hose
3	6	10205012	Hexagon cylinder head M5x12 FZB

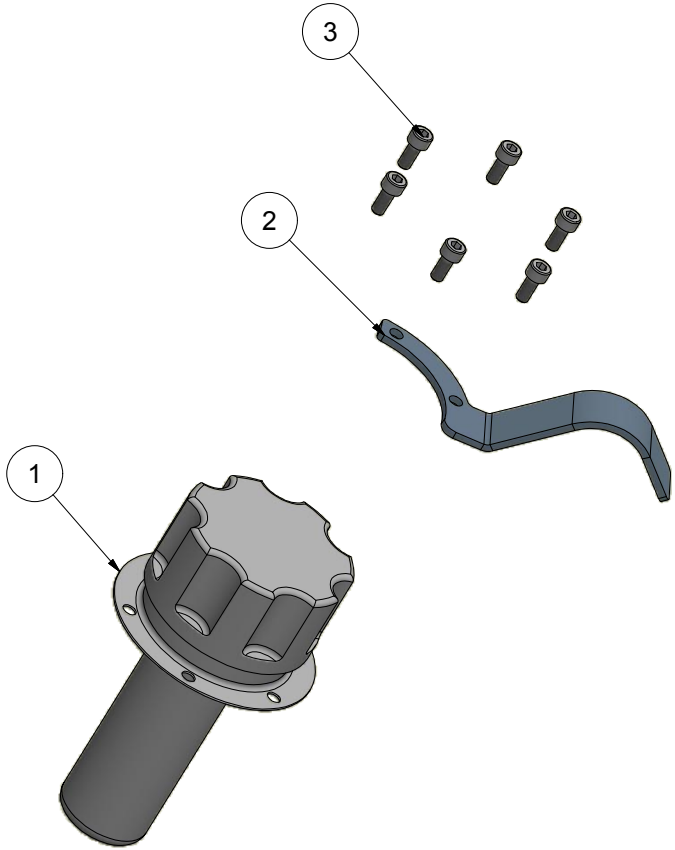

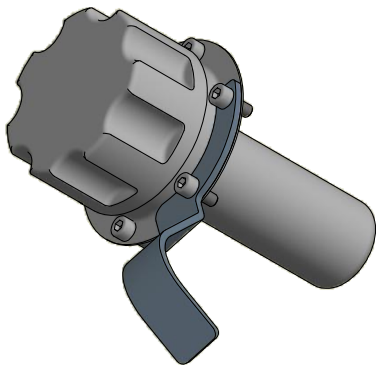

Break all edges

Revision:	Approved	Date:	Revision Description
1	SK	2016-09-22	Made

The document is strictly confidential and may not in no account be copied or discloses to any third person.
HEDENSTED GRUPPEN A/S

HEDENSTED GRUPPEN

Scale: 1 : 2	Not specificed tolerance according to: DS/ISO 2768-m	Sheet size: A3
	Surface properties: No	Sheet: 1 /1
Part No.: M12105	Material:	
Description 1: Filler neck assembly		
Description 2:		

PARTS LIST			
ITEM	QTY	PART NUMBER	DESCRIPTION
1	1	423556	Filter head
2	1	423558	MP Oil filter
3	1	477126	Straight connector w. gasket Ø22L x 3/4"
4	1	423560	VS Vakuummeter Axial 0-76 CMHG

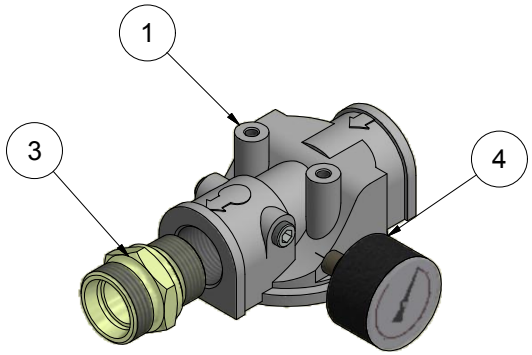

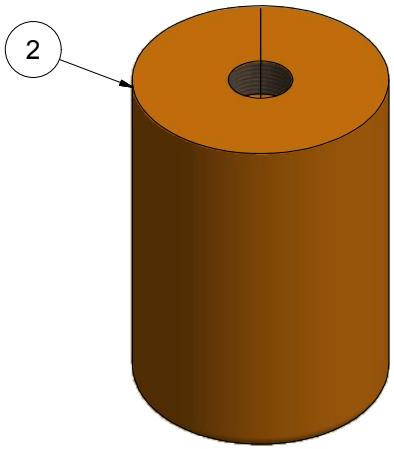

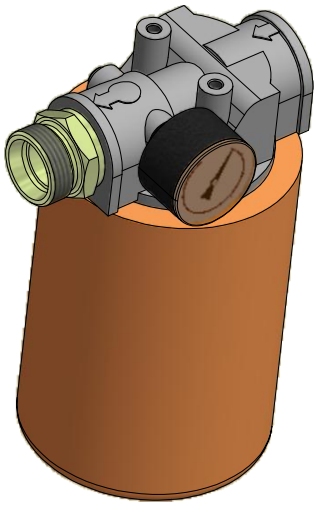

Break all edges

Revision:	Approved	Date:	Revision Description
1	SK	22-09-2016	Made

The document is strictly confidential and may in no account be copied or discloses to any third person.
HEDENSTED GRUPPEN A/S

HEDENSTED GRUPPEN

Scale: 1 : 2	Not specificed tolerance according to: DS/ISO 2768-m		Sheet size: A3
	Surface properties: No		Sheet: 1 /1
Part No.: M12106	Material:		
Description 1: Oil filter assembly			
Description 2:			

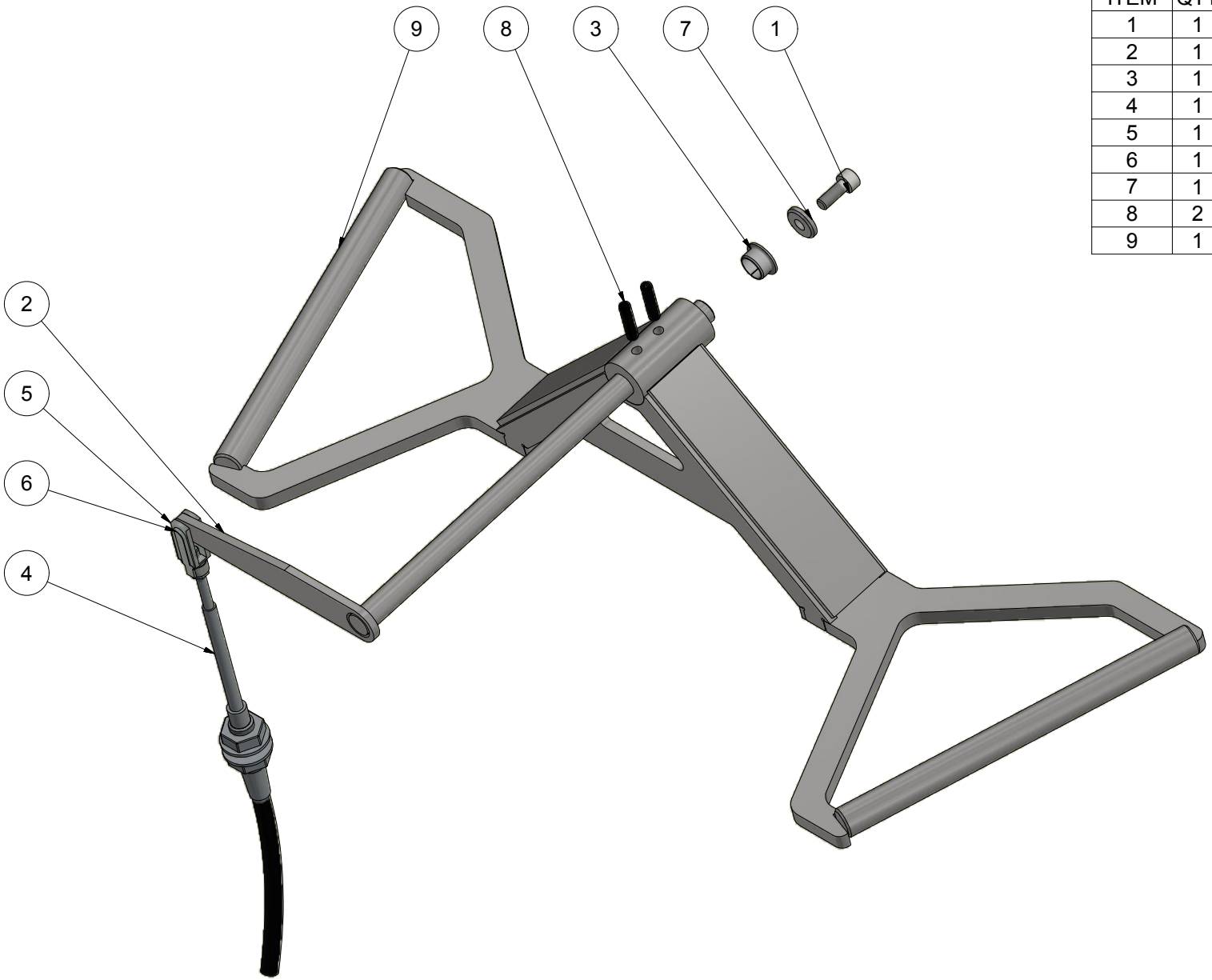

PARTS LIST			
ITEM	QTY	PART NUMBER	DESCRIPTION
1	1	10206016	Hexagon cylinder head M6x16 FZB
2	1	423408	Shaft for handle
3	1	423423	Slide bushing Ø12xØ14x7
4	1	423430	Sterring cable, HG Super skub
5	1	423432	F-Bracket for cable G5x20
6	1	423443	Clips for F-joint
7	1	87606000	Washer Ø6,4x17x3 FZB
8	2	89505022	Pin slotted Ø5x22
9	1	M100499	Trottel grip

Break all edges

Revision:	Approved	Date:	Revision Description
1	SK	09-11-2016	Made

The document is strictly confidential and may in no account be copied or discloses to any third person.
HEDENSTED GRUPPEN A/S

HEDENSTED GRUPPEN

Scale: 1 : 2	Not specificed tolerance according to: DS/ISO 2768-m	Sheet size: A3
	Surface properties: No	Sheet: 1 /1
Part No.: M12107	Material:	
Description 1: Trottel grip assembly		
Description 2:		

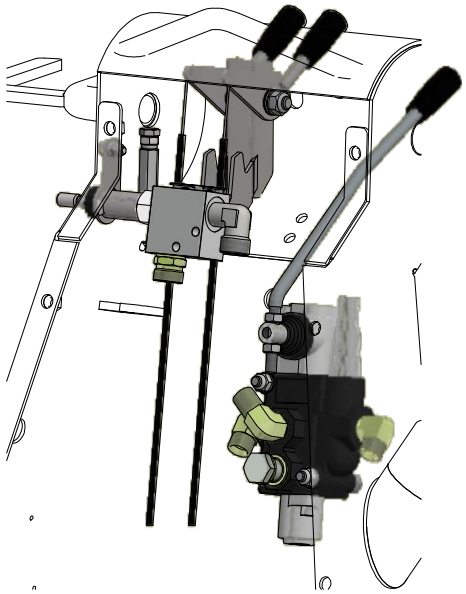

PARTS LIST			
ITEM	QTY	PART NUMBER	DESCRIPTION
1	1	11406016	Hexagon bolt M6x16 FZB
2	1	11408035	Hexagon bolt M8x35 FZB
3	1	17906000	Self-locking nut M6 FZB
4	1	17908000	Self-locking nut M8 FZB
5	1	422663	Tilt valve assambly 2014
6	1	423570	Alu valveblock pipe mounted
7	1	423573	Valve, cartridge 12v DC 2 way with override (ø16mm solenoid)
8	1	477117	Straight connector w. gasket Ø15L x 3/8"
9	1	477146	Elbow 3/8"t x Ø15L
10	1	477246	Hyd. hose 1/2"x580mm No.56
11	1	477251	Hydr.hose 1/2x500mm. No.55
12	1	477252	Hydr.hose 3/8"x1620mm No.51
13	1	477254	Hydr.hose 3/8"x1450mm No.54
14	2	477255	Hydr.hose 1/2"x1700mm.
15	1	477259	Hydr.hose 3/4x870mm. No.59
16	1	477261	Hydr.hose 3/4x800mm.No.60
17	1	477263	Hydr.hose 3/8x1850mm. No.53
18	1	477266	Hydr.hose 3/8x2530mm.No.52
19	1	82106000	Washer M6 FZB
20	1	M102486	Throtle/choke assembly
21	1	M103769	Bracket for valve

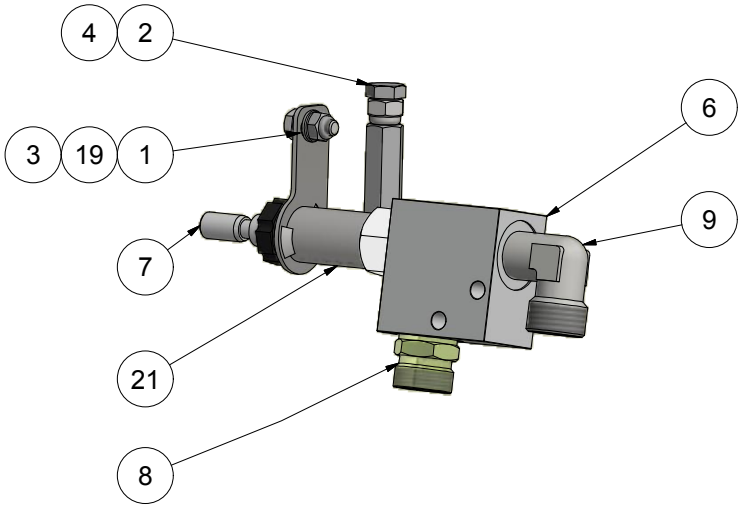

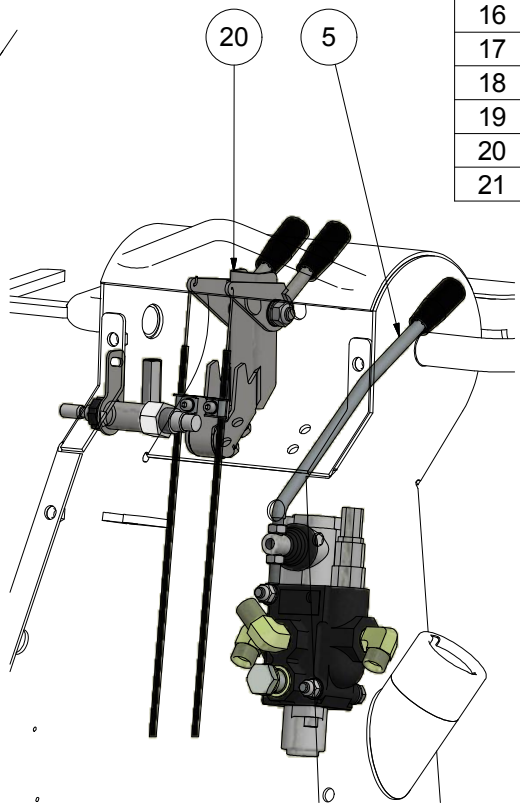

Break all edges

Revision:	Approved	Date:	Revision Description
2	KL	10-10-2018	Manuel valve + bracket changed

The document is strictly confidential and may in no account be copied or disclosed to any third person.
HEDENSTED GRUPPEN A/S

HEDENSTED GRUPPEN

Scale: 1 : 4	Not specificed tolerance according to: DS/ISO 2768-m		Sheet size: A3
	Surface properties: No		Sheet: 1 /1
Part No.: M102504	Material:		
Description 1: Valves assembly S.S 2016			
Description 2:			

PARTS LIST			
ITEM	QTY	PART NUMBER	DESCRIPTION
1	2	11408065	Hexagon bolt M8x65 FZB
2	2	1508000	Nut M8 FZB
3	2	17908000	Self-locking nut M8 FZB
4	1	423424	Handle, Ø21 cylindrical knob Ø10
5	1	423522	Handle for tilt valve
6	1	423526	Hydraulic tilt valve
7	1	477105	Elbow 3/8"t x 3/8"t (M/M)
8	2	477139	Elbow 3/8"t x Ø12L
9	2	477163	Bopnded seal washer 3/8"
10	1	477222	Banjo bolt 3/8"
11	4	82108000	Washer M8 FZB

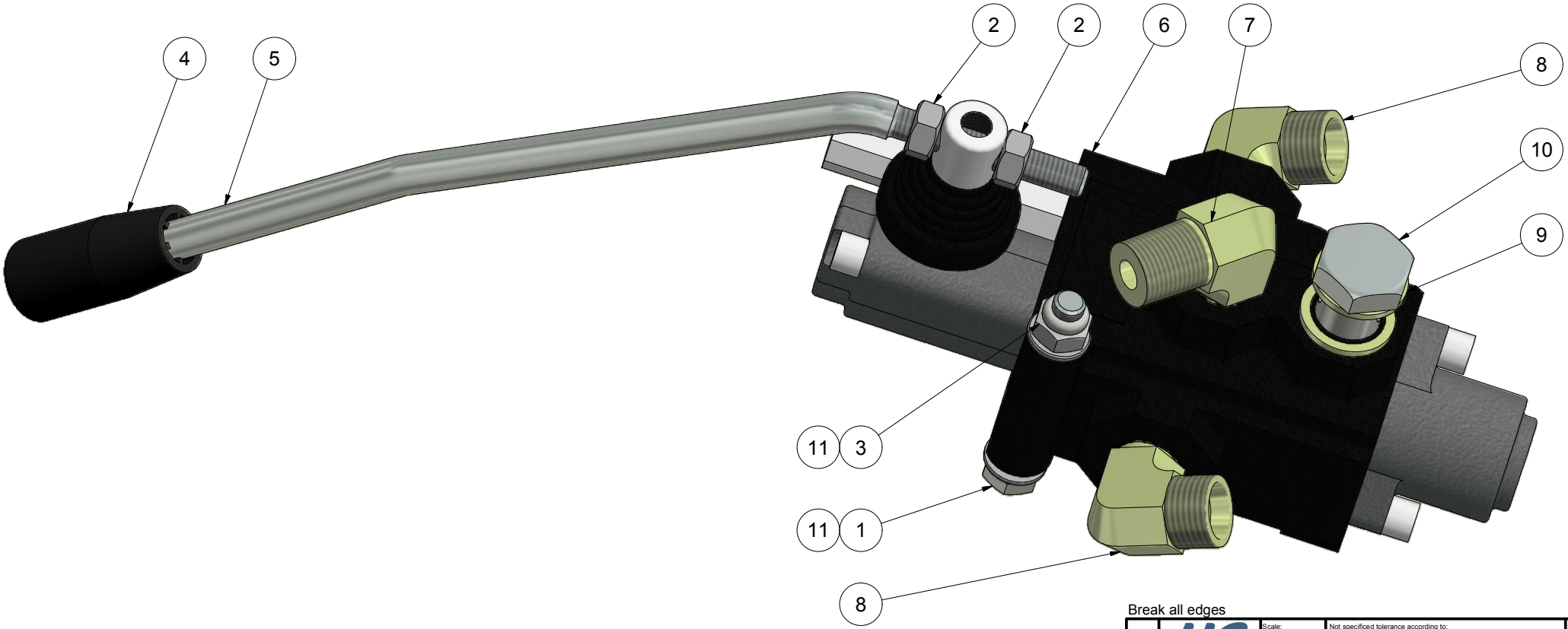

Break all edges

Revision:	Approved	Date:	Revision Description
1	HG	27-09-2015	Revision changed to numeric

The document is strictly confidential and may in no account be copied or discloses to any third person.
HEDENSTED GRUPPEN A/S

HEDENSTED GRUPPEN

Scale: 1 : 1	Not specificed tolerance according to: DS/ISO 2768-m		Sheet size: A3
	Surface properties: No		Sheet: 1 /2
Part No.: 422663	Material:		
Description 1: Tilt valve assambly 2014			
Description 2: Hydra combi + SS			

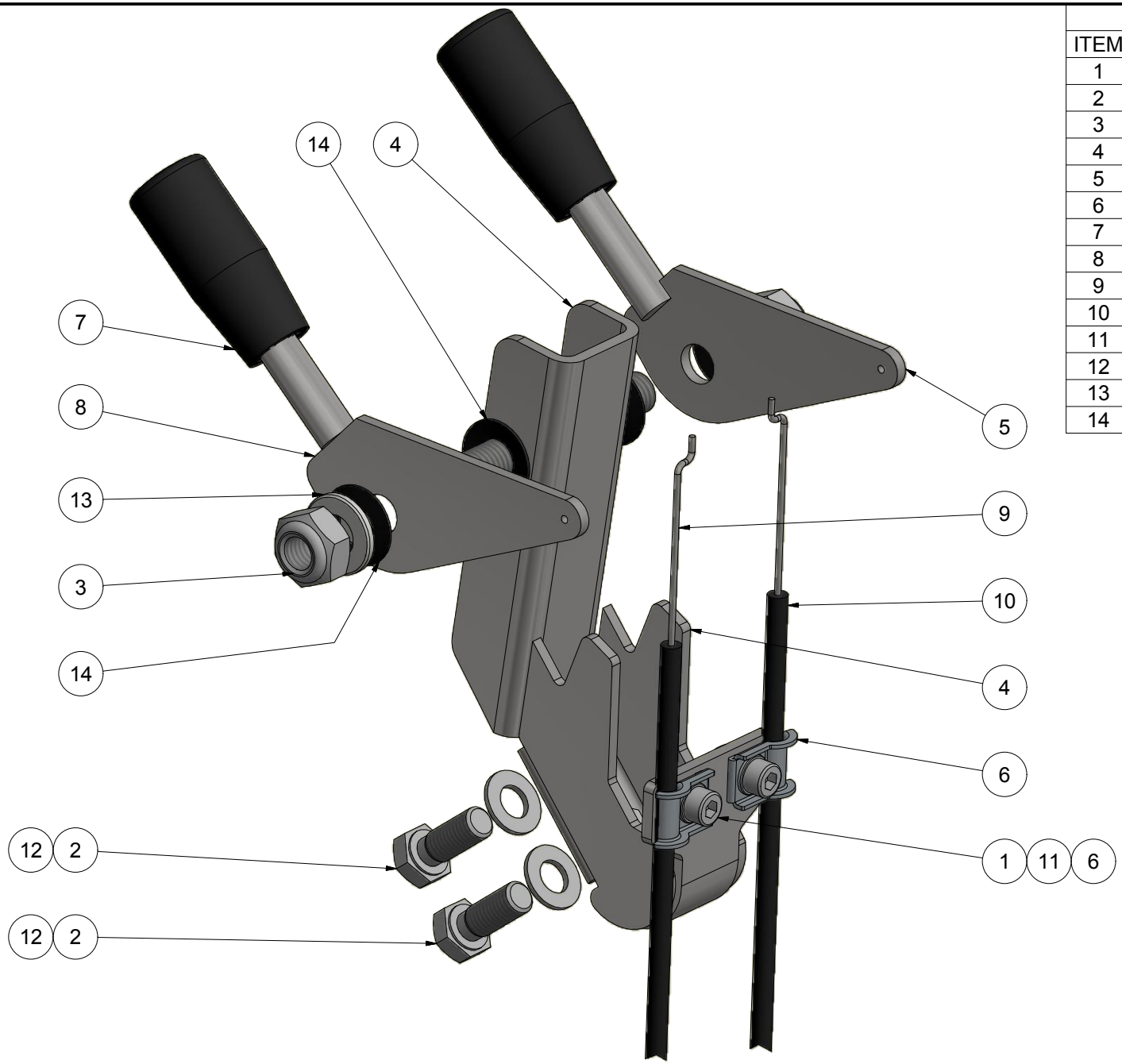

Parts List

ITEM	QTY	PART NUMBER	DESCRIPTION
1	2	10205012	Hexagon cylinder head M5x12 FZB
2	2	11408020	Hexagon bolt M8x20 FZB
3	2	17910000	Self-locking nut M10 FZB
4	1	423412	Brace for throtle and choke
5	1	423413	Gas choke handle right
6	2	423419	Cable clamp
7	2	423424	Handle, Ø21 cylindrical knob Ø10
8	1	423426	Gas/choke handle left
9	1	423429	Gas cable S.S. Hydra.
10	1	423437	Choker cable S.S. Hydra.
11	2	82105900	Washer M5 FZB
12	2	82108000	Washer M8 FZB
13	2	82110000	Washer M10 FZB
14	4	89310080	Disc spring 20x10,5x0,8

Break all edges

Revision:	Approved	Date:	Revision Description
1	HG	05-01-2017	Made

The document is strictly confidential and can in no account be copied or discloses to any third person HEDENSTED GRUPPEN A/S

HEDENSTED GRUPPEN

Scale: 1: 1

Not specificed tolerance according to: DS/ISO 2768-m

Sheet size: A3

Surface properties:

Sheet: 1 /1

Part No.: M102486

Material:

Description 1: Throtle/choke assembly

Description 2: SS hydra

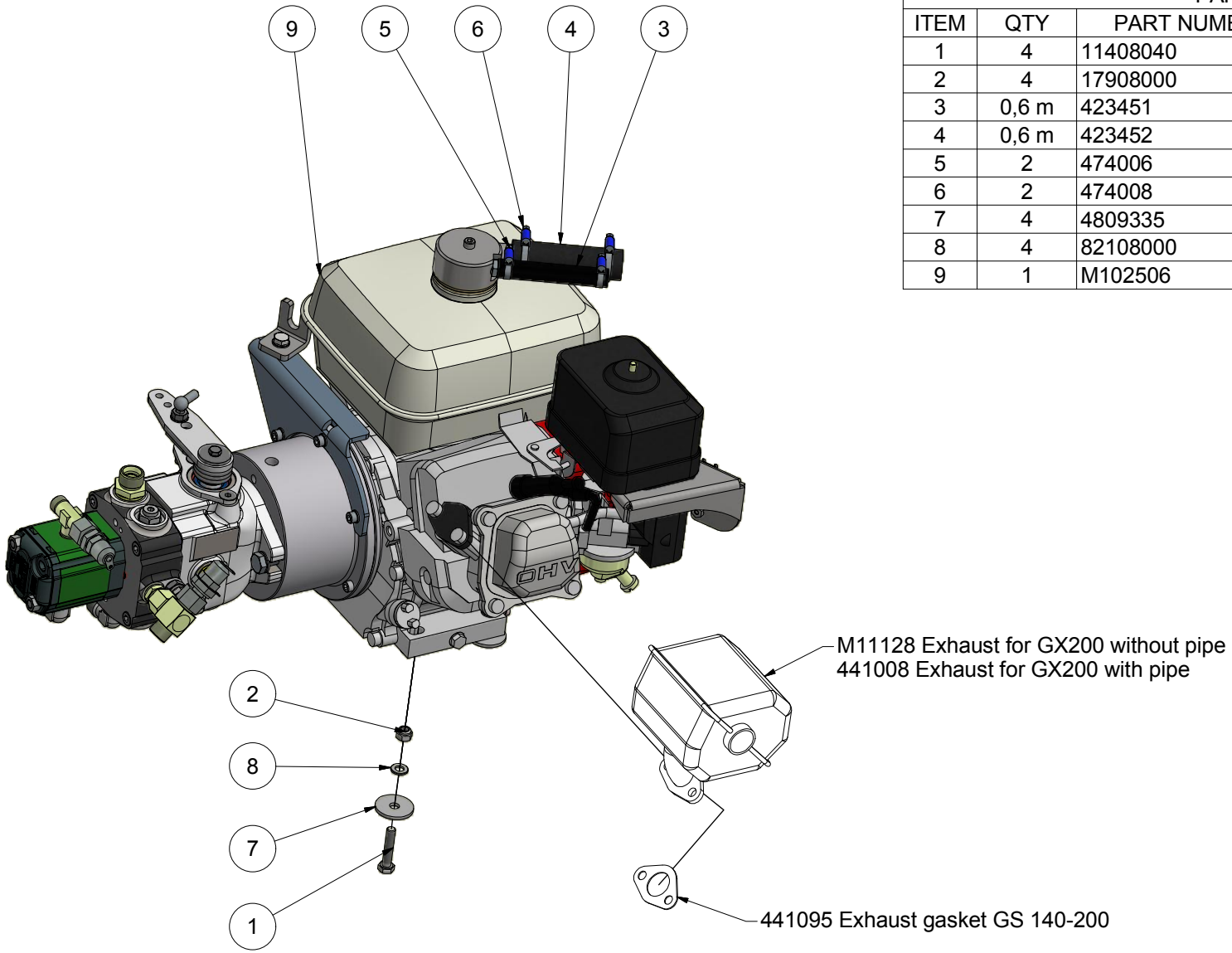

PARTS LIST

ITEM	QTY	PART NUMBER	DESCRIPTION
1	4	11408040	Hexagon bolt M8x40 FZB
2	4	17908000	Self-locking nut M8 FZB
3	0,6 m	423451	Fuel hose hydro eco 10x3,5
4	0,6 m	423452	Fuel hose 19x6,0
5	2	474006	Hose clamp 11-16
6	2	474008	Hose clamp 22-30
7	4	4809335	Washer SRKB Ø9x35x3 FZB
8	4	82108000	Washer M8 FZB
9	1	M102506	Engine assembly 2 - TMP

Break all edges

Revision:	Approved	Date:	Revision Description
3	KL	23-04-2018	Exhaust changed. Bolts for mount flipped

The document is strictly confidential and can in no account be copied or discloses to any third person HEDENSTED GRUPPEN A/S

HEDENSTED GRUPPEN

Scale: 1 : 4	Not specificed tolerance according to: DS/ISO 2768-m		Sheet size: A3
	Surface properties: No		Sheet: 1 /1
Part No.: M102505	Material:		
Description 1: Engine assembly 3 TMP			
Description 2:			

PARTS LIST			
ITEM	QTY	PART NUMBER	DESCRIPTION
1	3	10206020	Hexagon cylinder head M6x20 FZB
2	3	10206030	Hexagon cylinder head M6x30 FZB
3	1	10506010	Stop screw M6x10-B
4	1	11408016	Hexagon bolt M8x16 FZB
5	1	11408025	Hexagon bolt M8x25 FZB
6	2	11410030	Hexagon bolt M10x30 FZB
7	1	17908000	Self-locking nut M8 FZB
8	4	20408025	Hexagon countersunk head M8x25 FZB
9	1	422659	Engine assembly 1
10	1,7 m	423470	Starter string 4,5 mm (1,58m)
11	0,6 l	476705	Engine oil Q8 T520 15W-40
12	6	82106000	Washer M6 FZB
13	2	82108000	Washer M8 FZB
14	2	82110000	Washer M10 FZB
15	2	82608000	Washer Ø8,4x24x2 FZB
16	1	M102507	Hydraulic pump assembly TMP pump
17	1	M102605	Brace for sterring cable
18	1	M102606	Arm for sterring cable
19	1	M103457	Bell for housing - centrifugal clutch
20	1	M103458	Flange for housing - centrifugal clutch
21	1	M103459	Centrifugal clutch for GX200

M103459 Centrifugal clutch is used from model S/N 280100-549-2018

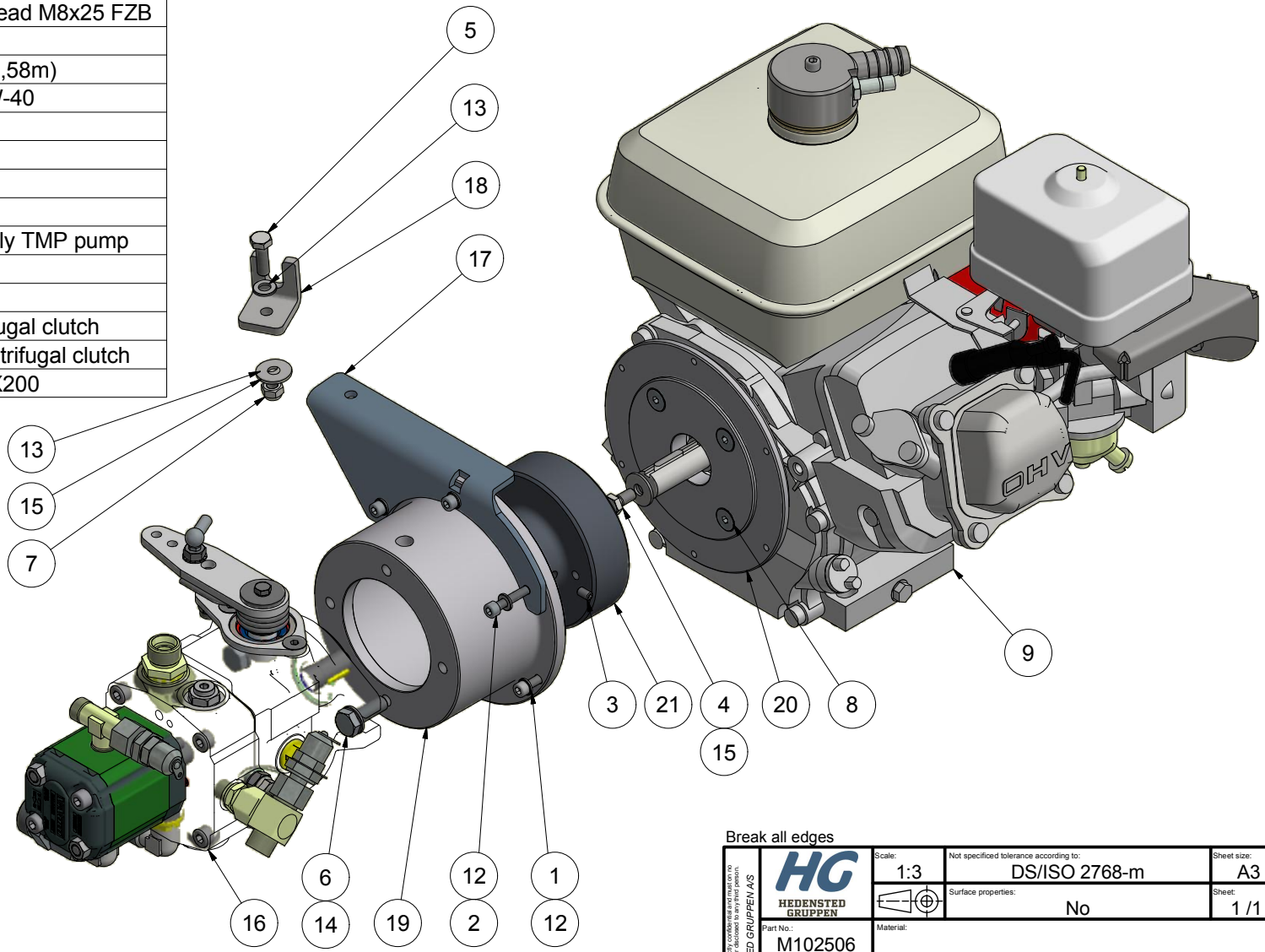

Break all edges

Revision:	Approved	Date:	Revision Description
4	KKS	20-12-2018	Stop screw added

The document is strictly confidential and may in no account be copied or disclosed to any third person.
HEDENSTED GRUPPEN A/S

HEDENSTED GRUPPEN

Scale: 1:3	Not specificed tolerance according to: DS/ISO 2768-m	Sheet size: A3
	Surface properties: No	Sheet: 1 /1
Part No.: M102506	Material:	
Description 1: Engine assembly 2 - TMP		
Description 2:		

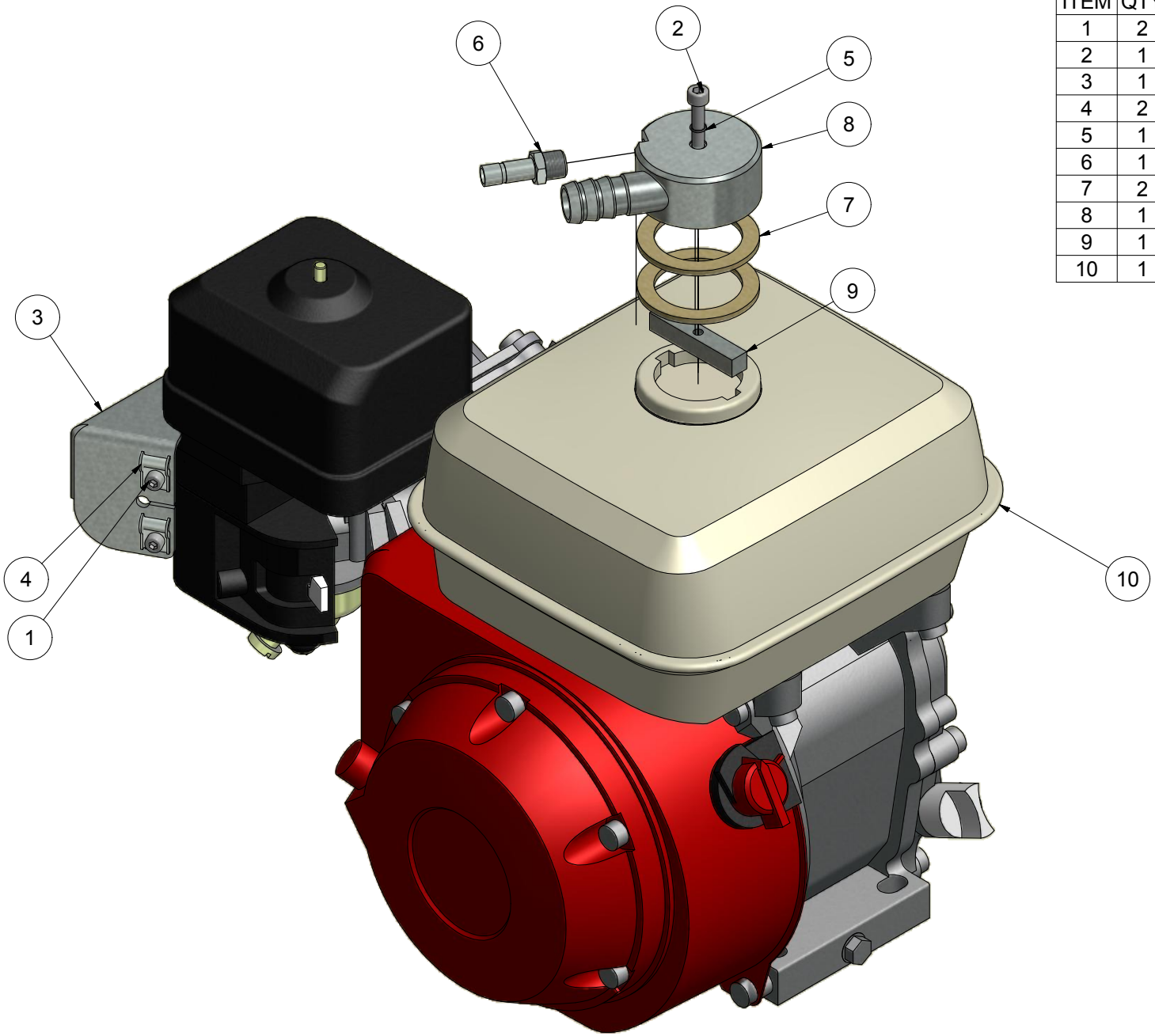

PARTS LIST

ITEM	QTY	PART NUMBER	DESCRIPTION
1	2	10205010	Hexagon cylinder head M5x10 FZB
2	1	10206050	Hexagon cylinder head M6x50 FZB
3	1	423415	Throtle-Choke brace
4	2	423419	Cable clamp
5	1	423444	O-ring OR6,00-1,00
6	1	423446	Reduction stem Ø10 x 1/4" pipe Metal
7	2	423627	Gasket for fueltank
8	1	43356	External fuel cap
9	1	43359	Tension brace
10	1	441705	HONDA GX200UT SXE5 electrical start

Break all edges

Revision:	Approved	Date:	Revision Description
1	HG	27-09-2015	Revision changed to numeric

The document is strictly confidential and may in no account be copied or discloses to any third person.
HEDENSTED GRUPPEN A/S

HEDENSTED GRUPPEN

Scale: 1 : 2

Not specificed tolerance according to: DS/ISO 2768-m

Surface properties: No

Sheet size: A3

Sheet: 1 /2

Part No.: 422659

Material:

Description 1: Engine assembly 1

Description 2:

Parts List			
ITEM	QTY	PART NUMBER	DESCRIPTION
1	2	250178	Hexagon cylinder head M8x90 12.9
2	1	424176	Tee 3/8"t x Ø12L x Ø12L (M/F/F)
3	1	477097	Straight connector w. gasket 3/8" x 3/4"
4	1	477110	Straight connector w. gasket Ø12L x 1/4"
5	1	477120	Straight connector w. gasket Ø15L 1/2"
6	1	477141	Elbow 1/2"t x Ø15L
7	1	477146	Elbow 3/8"t x Ø15L
8	1	477163	Bopnded seal washer 3/8"
9	1	477208	Reduction Ø15L w. o-ring Ø22L
10	2	477272	Test nipple w. o-ring Ø12L
11	1	489103	Ball angle joint AS08 M05
12	1	M101761	Tee adjustable Ø12L x Ø12L w. o-ring x Ø12L
13	1	M101762	Variable piston pump 13,6ccm
14	1	M101763	Gear pump 3,8ccm, German standard ø32
15	1	M101764	Key for German standard ø32 pump

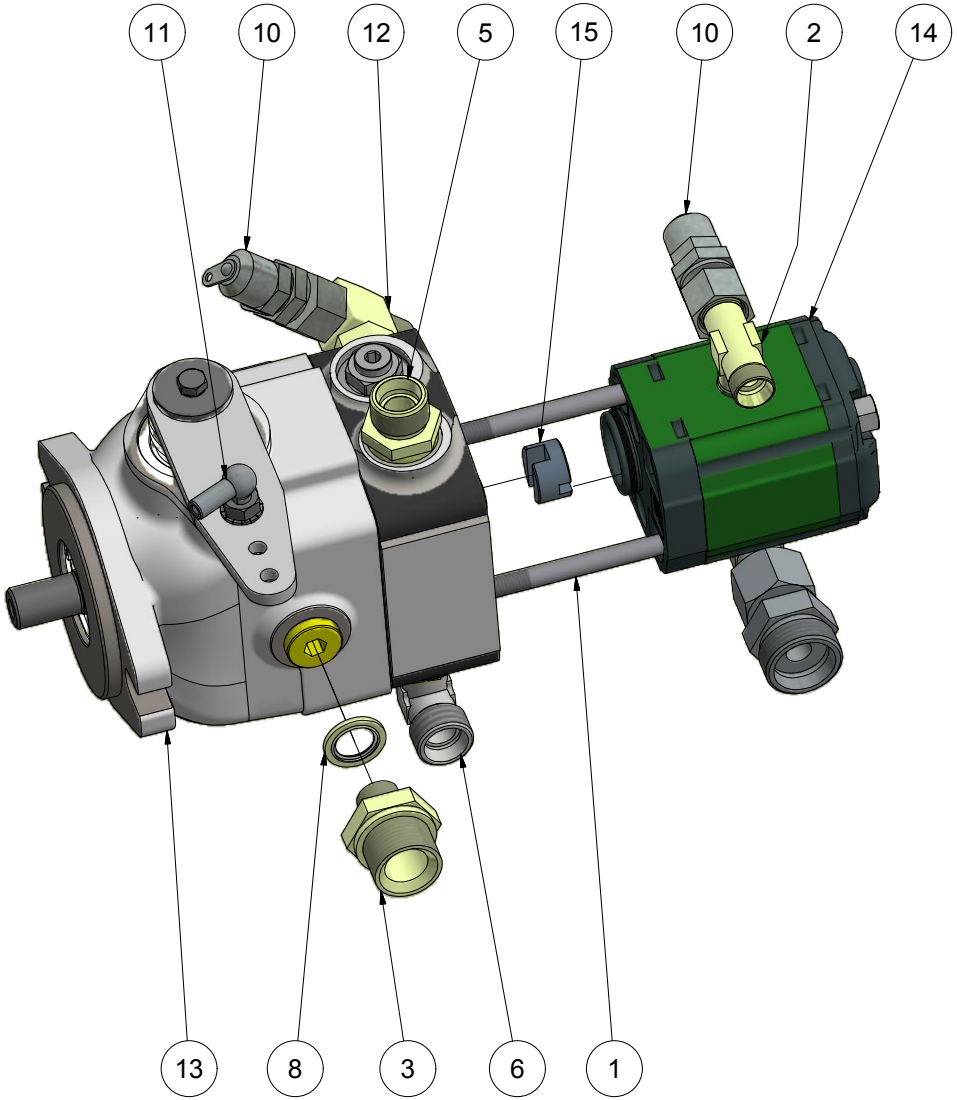

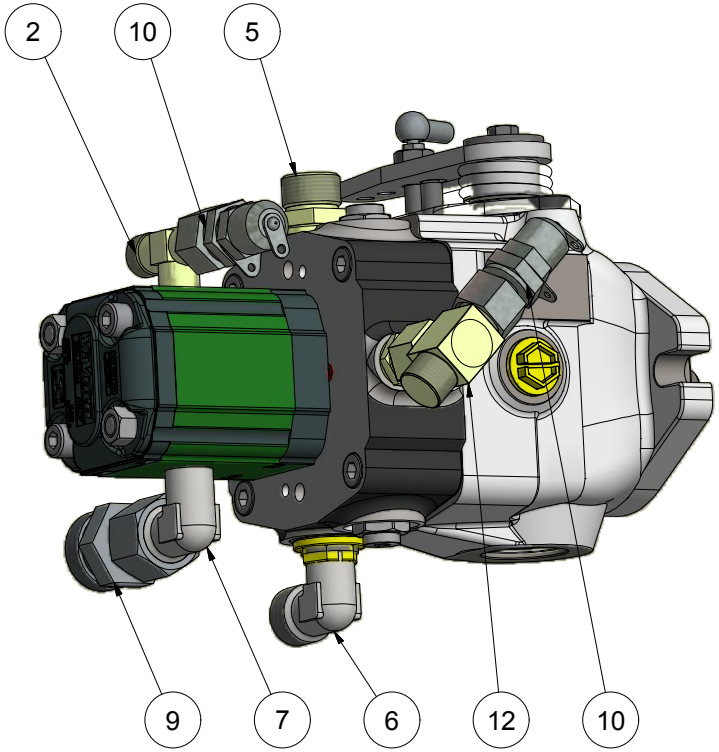

Break all edges

Revision:	Approved	Date:	Revision Description
3	KC	16-05-2018	Part list updated

The document is strictly confidential and can no account be copied or discloses to any third person HEDENSTED GRUPPEN A/S

HEDENSTED GRUPPEN

Scale: 1 : 2	Not specificed tolerance according to: DS/ISO 2768-m		Sheet size: A3
	Surface properties:		Sheet: 1 /2
Part No.: M102507	Material:		
Description 1: Hydraulic pump assembly TMP pump			
Description 2:			

Generalna zasada:
dokręcić wszystkie złączki hydrauliczne z odpowiednią siłą -
dobierz odpowiednią siłę do rozmiaru złączki zgodnie z tabelą.

General rule:
tighten all hydraulic nipples with correct force -
for each siez of nipple use correct force according to table.

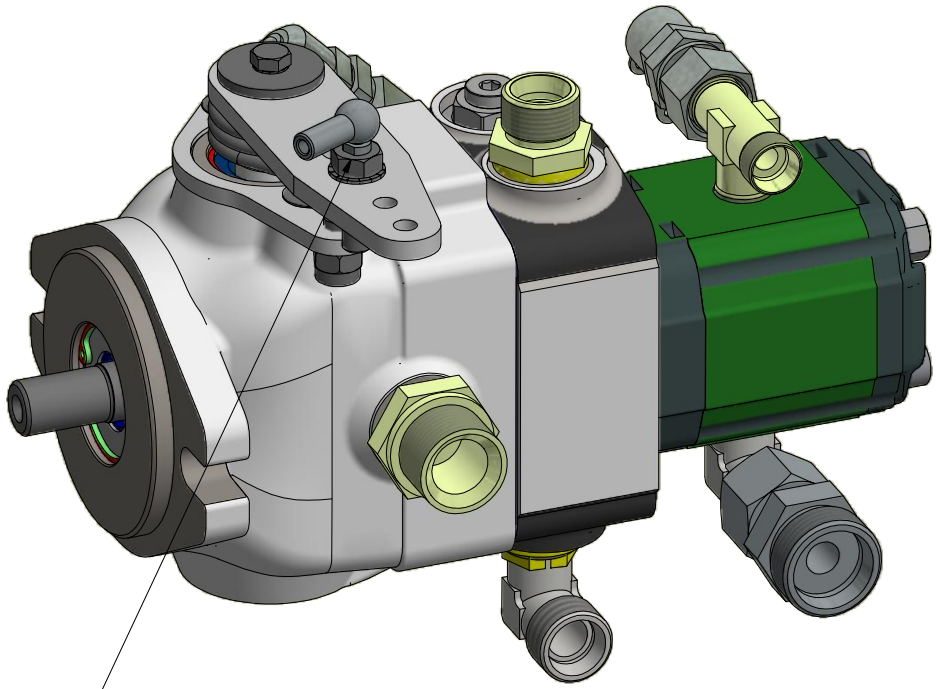

Break all edges

Revision:	Approved	Date:	Revision Description
3	KC	16-05-2018	Part list updated

The document is strictly confidential and can in no account be copied or discloses to any third person HEDENSTED GRUPPEN A/S

HEDENSTED GRUPPEN

Scale: 1 : 2	Not specificed tolerance according to: DS/ISO 2768-m		Sheet size: A3
	Surface properties:		Sheet: 2 /2
Part No.: M102507	Material:		
Description 1: Hydraulic pump assembly TMP pump			
Description 2:			

PARTS LIST			
ITEM	QTY	PART NUMBER	DESCRIPTION
1	2	10206012	Hexagon cylinder head M6x12 FZB
2	2	11416150	Hexagon bolt M16x150 FZB
3	2	17916000	Self-locking nut M16 FZB
4	4	20412030	Hexagon countersunk head M12x30 FZB
5	1	280140	Wheel suspension
6	2	423068	Grease nipple M6 straight
7	2	423465	Fork for wheel
8	2	423466	Tire with rim Ø268xØ12,5x120
9	2	82106000	Washer M6 FZB

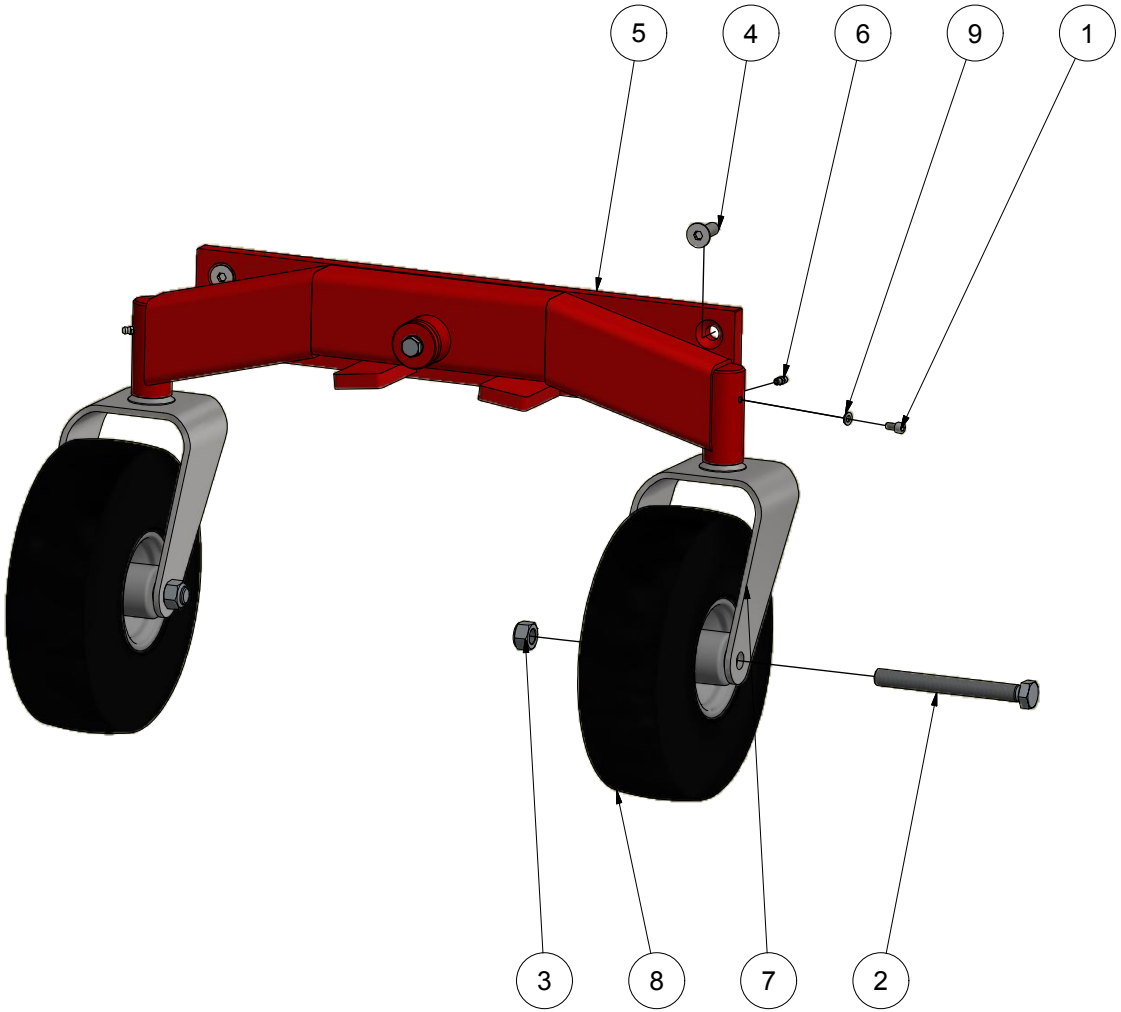

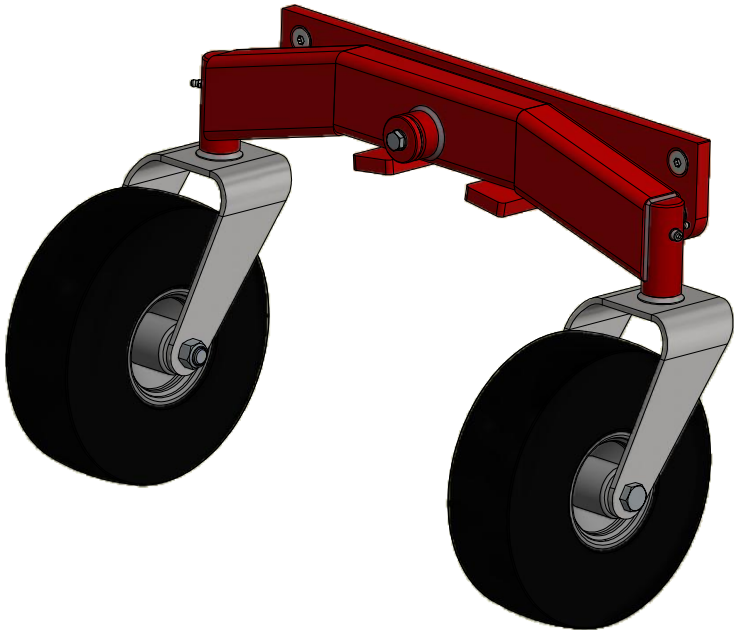

Break all edges

Revision:	Approved	Date:	Revision Description
1	SK	22-09-2016	Made

The document is strictly confidential and may in no account be copied or discloses to any third person.
HEDENSTED GRUPPEN A/S

HEDENSTED GRUPPEN

Scale: 1 : 5	Not specificed tolerance according to: DS/ISO 2768-m	Sheet size: A3
	Surface properties: No	Sheet: 1 /1
Part No.: M12110	Material:	
Description 1: Wheel suspension assembly		
Description 2:		

Parts List			
ITEM	QTY	PART NUMBER	DESCRIPTION
1	1	280139	Wheel suspension, movable part
2	1	280138	Wheel suspension, base part
3	1	43254	End plate Ø45
4	1	11410030	Hexagon bolt M10x30 FZB
5	1	82110000	Chamfered Washer M10 FZB
6	2	422413	Slide Bearing PAF-30260 (34x30x26)

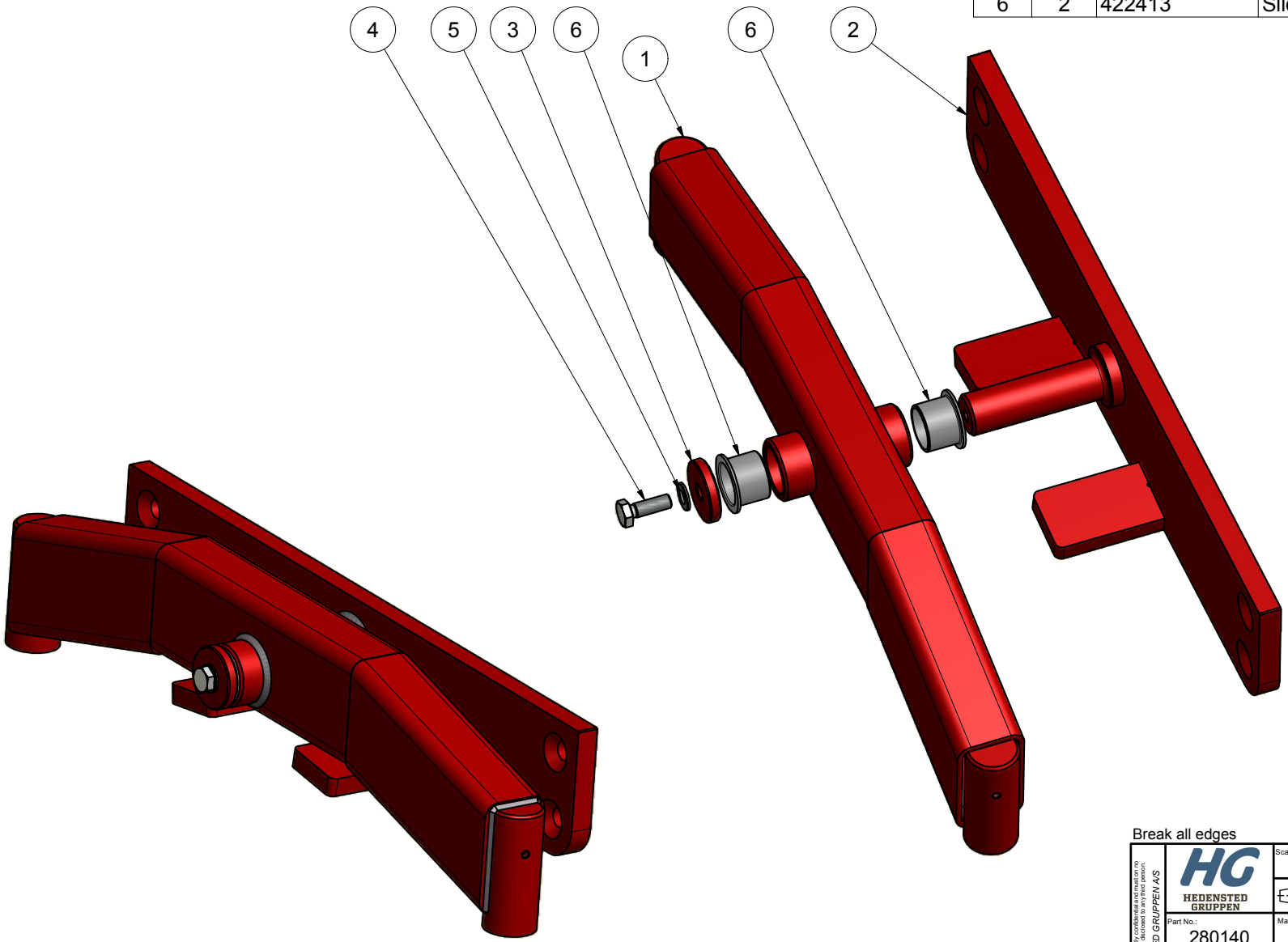

Break all edges

Revision:	Approved	Date:	Revision Description
1	HG	28-09-2015	Revision changed to numeric

The document is strictly confidential and can in no account be copied or discloses to any third person HEDENSTED GRUPPEN A/S

HEDENSTED GRUPPEN

Scale: 1 : 3	Not specificed tolerance according to: DS/ISO 2768-m	Sheet size: A3
	Surface properties:	Sheet: 1 /1
Part No.: 280140	Material:	
Description 1: Wheel suspension		
Description 2: Without fork & wheels (Rem. bolts)		