TOLERANCES FOR HARNESS & LEADS UNLESS OTHERWISE SPECIFIED (mm)		
LENGHT	HARNESS	LEADS
<999	±10	±10
1000-1999	±20	±20
2000-2999	±30	±30
3000-3999	±40	±40
>5000	±50	±50

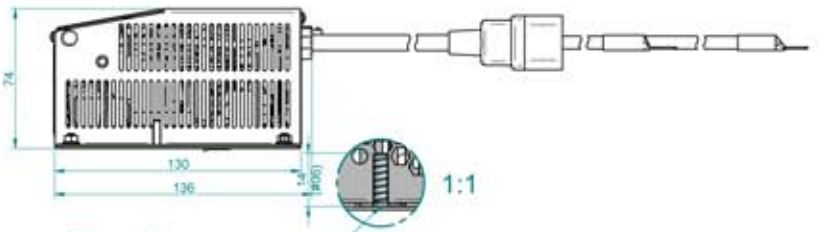

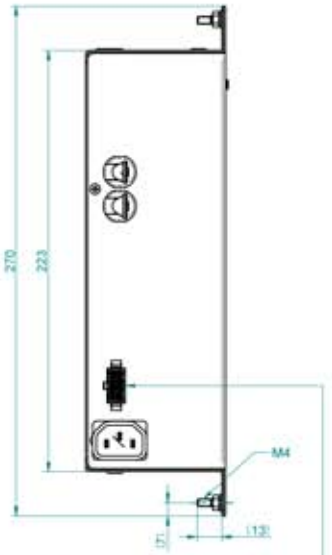

Signals connector
Manufacturer: MOLEX
Model: Mini-Fit Jr.™ Plug Housing, Dual Row, 8 Circuits
Part Number: 39-01-2081

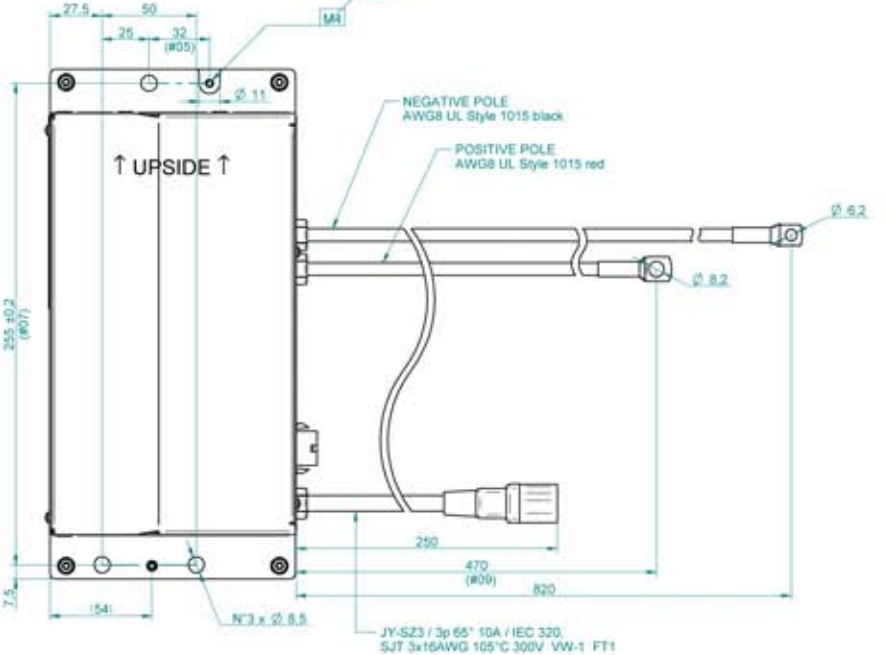

CE

P/N: 4131473
Input: 100-240V~ 10.5A 50-60Hz
Output: 24V⎓30A
Battery Type: LEAD

Date: 20/11/2015
S/N: *12345678*

- WARNING: Explosive gases. Prevent flames and sparks. Provide adequate ventilation during charging.
- Disconnect the supply before making or breaking the connections to the battery
- Do not remove the cover, danger of electric shocks
- For indoor use only
- Before charging, read the instructions

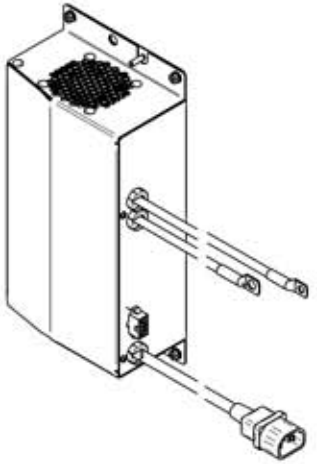

Notes:
- Active PFC, Power factor: 0,96 min
- Efficiency: >85%
- Insulating: Class 1
- Charge Algorithm: multistage chemestry dependent Wet/Gel/AGM/XFC/Lithium selectable by dipswitch or canbus

- CE Compliant

Enviromental
- Operating temperature: -10 to+40°C
- Storage Temperature: -40 to +60°C
- Forced ventilation

Internal Auxiliary relay
- MAX 1A on inductive load @ 24V
- MAX 2A on resistive load @ 24V

Firmware:
- 007-000-002-001-00.hex

SIGNALS CONNECTOR

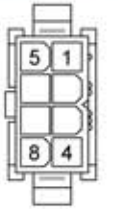

1	CAN BUS H
2	CAN BUS L
3	COMMON RELE' AUX
4	N.C. RELE' AUX
5	LED COMMON
6	CAN BUS COMMON
7	LED 1 - RED ANODE
8	LED 2 - GREEN ANODE

housing made of
pre-galvanized steel sheets

1:2	1/8	A2	For tolerance general as area precision refers alla norma UNI EN 22768 m-k	E. Ferriani	M Felloni	09/04/2015
			Battery Charger CBHF3 24V 30A, 100-240Vac			D00285-10