TROJAN BATTERY COMPANY

DATA SHEET MOTIVE 31-AGM

MODEL **31-AGM**
VOLTAGE **12**
CAPACITY **100Ah @ 20Hr**
MATERIAL **Polypropylene**
BATTERY **VRLA AGM / Non-Spillable / Maintenance-Free**
COLOR **Maroon**
WATERING **No Watering Required**

MADE IN THE USA

C·MAX TECHNOLOGY

12 VOLT

PHYSICAL SPECIFICATIONS

BCI	MODEL NAME	TERMINAL TYPE [G]	DIMENSIONS [C] INCHES (mm)			WEIGHT [I] LBS. (kg)	HANDLES	INSTALLATION ORIENTATION
			LENGTH	WIDTH	HEIGHT [F]			
31	31-AGM	M8/DT	12.80 (325)	6.81 (173)	9.37 (238)	67 (30)	Plastic Handle	Horizontal and Vertical

ELECTRICAL SPECIFICATIONS

VOLTAGE	Cranking Performance		Capacity [A] Minutes		CAPACITY [B] AMP-HOURS (Ah)				ENERGY (kWh)	INTERNAL RESISTANCE (mΩ)	SHORT CIRCUIT CURRENT (amps)
	C.C.A.[D] @0°F	C.A.[E] @32°F	@ 25 Amps	@ 75 Amps	5-Hr	10-Hr	20-Hr	100-Hr	100-Hr		
12	600	720	177	–	82	92	100	111	1.33	4.80	2555

CHARGING INSTRUCTIONS

CHARGER VOLTAGE SETTINGS (AT 77°F/25°C)				
SYSTEM VOLTAGE	**12V**	**24V**	**36V**	**48V**
Maximum Charge Current (A)	20% of C_{20}			
Absorption Voltage (2.40 V/cell)	14.40	28.80	43.20	57.60
Float Voltage (2.25 V/cell)	13.50	27.00	40.50	54.00

Do not install or charge batteries in a sealed or non-ventilated compartment. Constant under or overcharging will damage the battery and shorten its life as with any battery.

CHARGING TEMPERATURE COMPENSATION

ADD	SUBTRACT
0.005 volt per cell for every 1°C below 25°C 0.0028 volt per cell for every 1°F below 77°F	0.005 volt per cell for every 1°C above 25°C 0.0028 volt per cell for every 1°F above 77°F

OPERATIONAL DATA

OPERATING TEMPERATURE	SELF DISCHARGE
-4°F to 122°F (-20°C to +50°C). At temperatures below 32°F (0°C) maintain a state of charge greater than 60%.	Less than 3% per month depending on storage temperature conditions

RECYCLE RESPONSIBLY

99% RECYCLABLE

12V AGM

STATE OF CHARGE MEASURE OF OPEN-CIRCUIT VOLTAGE

PERCENTAGE CHARGE	CELL	12 VOLT
100	2.14	12.84
75	2.09	12.54
50	2.04	12.24
25	1.99	11.94
0	1.94	11.64

Din forhandler
GACELL®
The right battery
GACELL A/S - Sletten 17 - DK 7500 Holstebro - 961 02 961

TROJAN 31-AGM PERFORMANCE

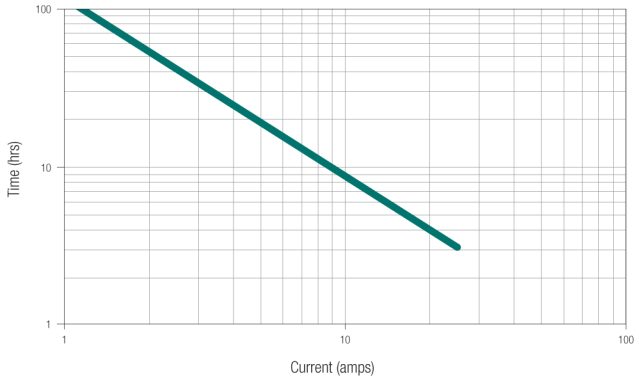

PERCENT CAPACITY VS. TEMPERATURE

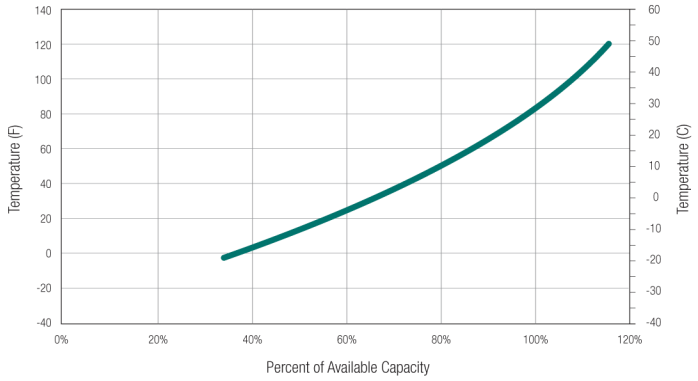

BATTERY DIMENSIONS (shown with DT)

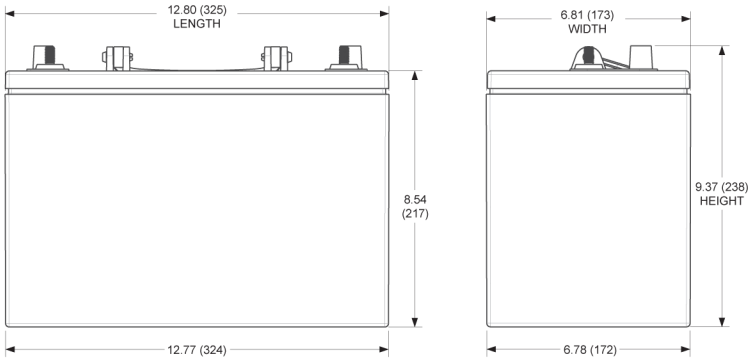

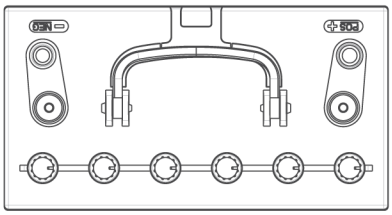

SELF DISCHARGE VS. TIME[H]

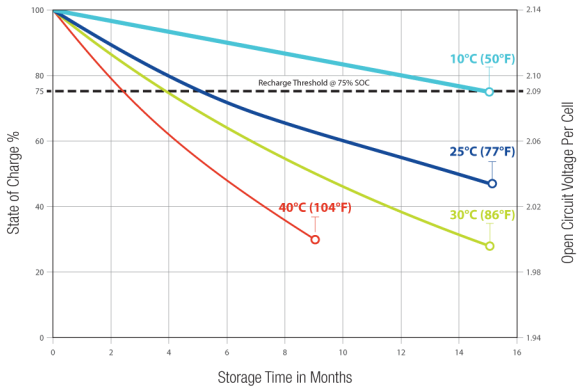

TERMINAL CONFIGURATIONS[G]

15 M8	M8
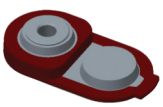	**Battery Height with Terminal in Inches (mm)** 8.69 (221) **Torque Values in-lb (Nm)** Bolt: 85 – 90 (10 – 11)

6 DT	AUTOMOTIVE POST & STUD
	Battery Height with Terminal in Inches (mm) 9.37 (238) **Torque Values in-lb (Nm)** Connected to Stud: 95 – 105 (11 – 12) Connected to AP: 50 – 70 (6 – 8) **Bolt Size** 5/16" – 18

Din forhandler

GACELL®
The right battery

GACELL A/S - Sletten 17 - DK 7500 Holstebro - 961 02 961

A. The number of minutes a battery can deliver when discharged at a constant rate at 80°F (27°C) and maintain a voltage above 1.75 V/cell. Capacities are based on peak performance.
B. The amount of amp-hours (Ah) a battery can deliver when discharged at a constant rate at 80°F (27°C) for the 20-Hour rate and 86°F (30°C) for the 5-Hour rate and maintain a voltage above 1.75 V/cell. Capacities are based on peak performance.
C. Dimensions may vary depending on type of handle or terminal. Batteries should be mounted with 0.5 inches (12.7 mm) spacing minimum.
D. C.C.A. (Cold Cranking Amps) - the discharge load in amperes which a new, fully charged battery can maintain for 30 seconds at 0°F (-18°C) at a voltage above 1.2 V/cell.
E. C.A. (Cranking Amps) - the discharge load in amperes which a new, fully charged battery can maintain for 30 seconds at 32°F (0°C) at a voltage above 1.2 V/cell. This is sometimes referred to as marine cranking amps @ 32°F or M.C.A. @ 32°F.
F. Height taken from bottom of the battery to the highest point on the battery. Heights may vary depending on type of terminal.
G. Terminal images are representative only.
H. A boost charge should be performed every 6 months when batteries are in storage.
I. Weight may vary.

Designed in compliance with applicable BCI, DIN, BS and IEC standards.
Tested in compliance to BCI and IEC standards.

800.423.6569 / +1.562.236.3000 / trojanbattery.com

31-AGM_DS_032919

© 2019 Trojan Battery Company, LLC. All rights reserved. Trojan Battery Company is not liable for damages that may result from any information provided in or omitted from this publication, under any circumstances. Trojan Battery Company reserves the right to make adjustments to this publication at any time, without notice or obligation.